Figure 9.4.9-1—Emergency Power Generating Building Ventilation System

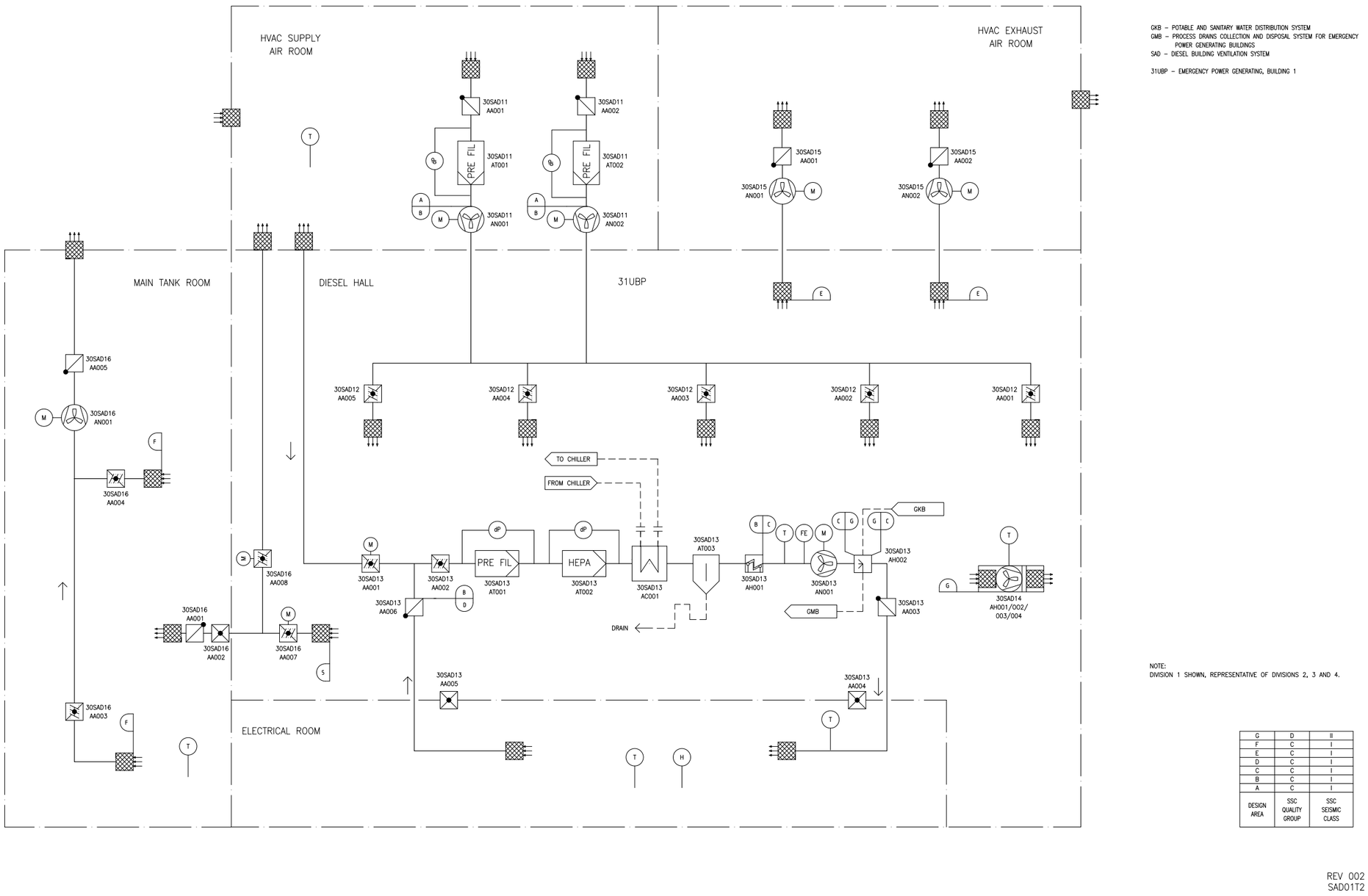

GKB – POTABLE AND SANITARY WATER DISTRIBUTION SYSTEM
GMB – PROCESS DRAINS COLLECTION AND DISPOSAL SYSTEM FOR EMERGENCY POWER GENERATING BUILDINGS
SAD – DIESEL BUILDING VENTILATION SYSTEM

31UBP – EMERGENCY POWER GENERATING, BUILDING 1

NOTE:
DIVISION 1 SHOWN, REPRESENTATIVE OF DIVISIONS 2, 3 AND 4.

G	D	II
F	C	I
E	C	I
D	C	I
C	C	I
B	C	I
A	C	I
DESIGN AREA	SSC QUALITY GROUP	SSC SEISMIC CLASS

REV 002
SAD01T2

Next File