Figure 9.4.6-1—Safeguard Building Electrical Divisions 1 and 4 Air Intake

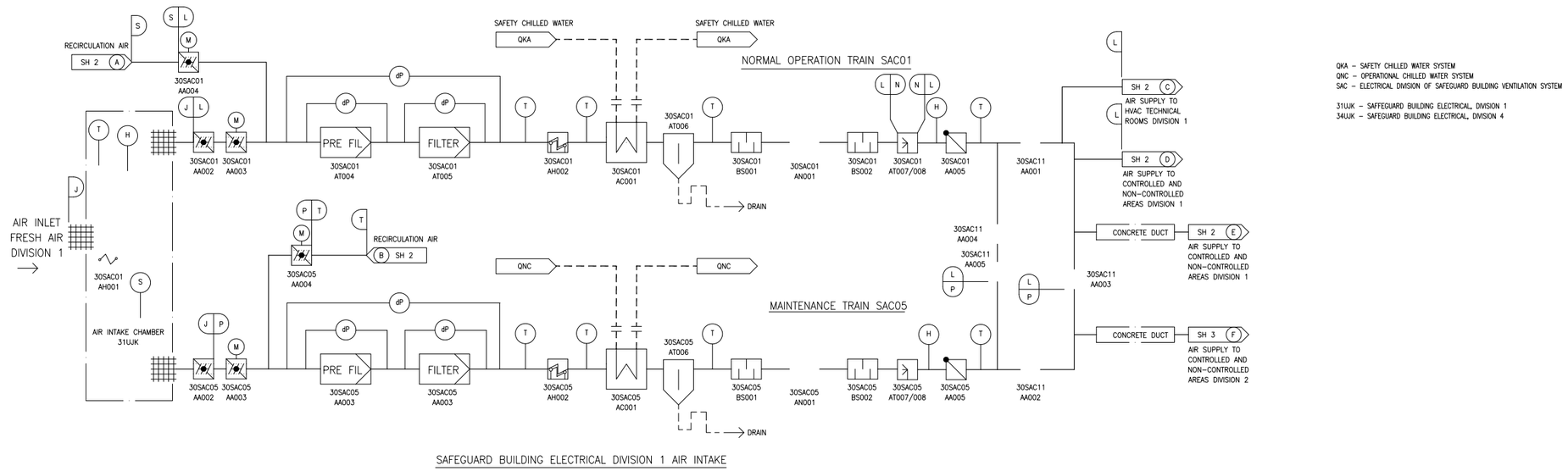

QKA – SAFETY CHILLED WATER SYSTEM
QNC – OPERATIONAL CHILLED WATER SYSTEM
SAC – ELECTRICAL DIVISION OF SAFEGUARD BUILDING VENTILATION SYSTEM

31UJK – SAFFEGUARD BUILDING ELECTRICAL, DIVISION 1
34UJK – SAFEGUARD BUILDING ELECTRICAL, DIVISION 4

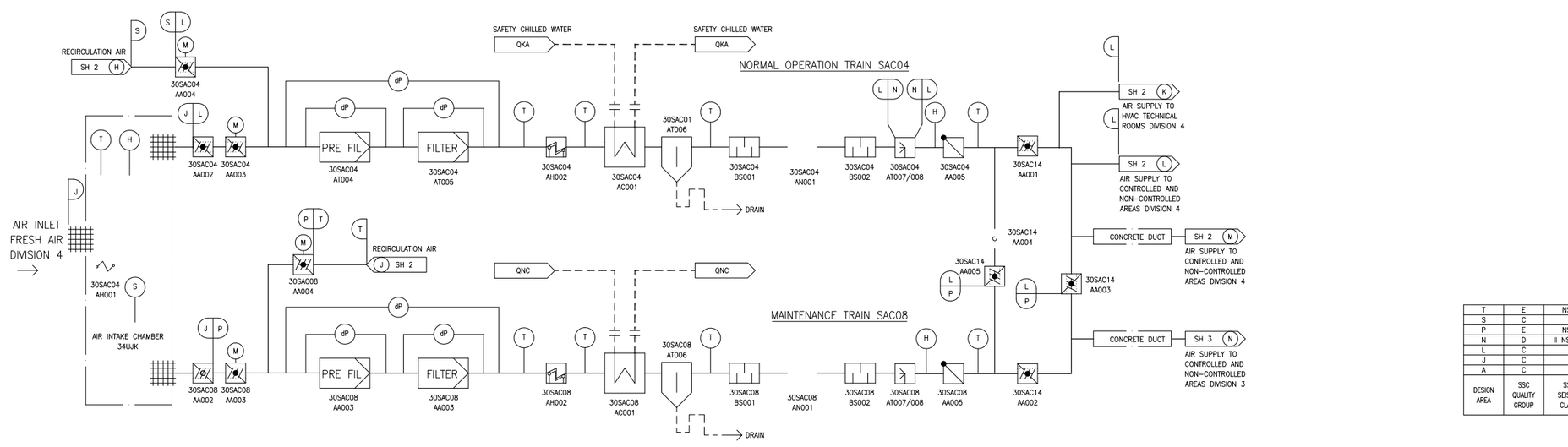

T	E	NSC
S	C	I
P	E	NSC
N	D	II NS-AQ
L	C	I
J	C	I
A	C	I
DESIGN AREA	SSC QUALITY GROUP	SSC SEISMIC CLASS

REV 002
SAC01T2

Figure 9.4.6-2—Safeguard Building Electrical Divisions 1 and 4 Air Supply and Exhaust

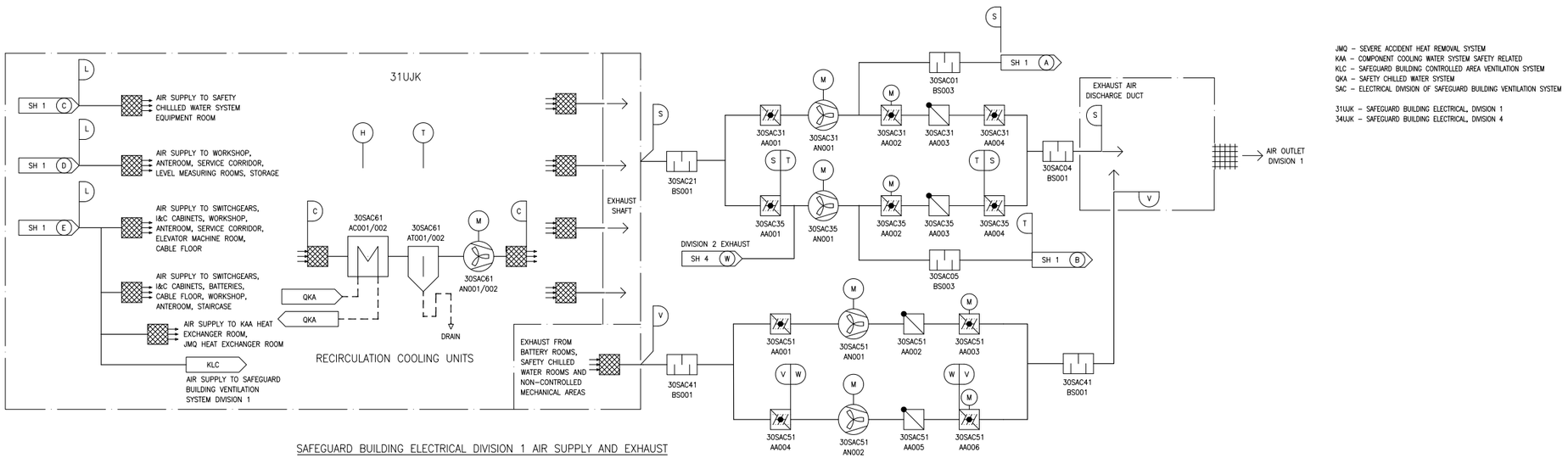

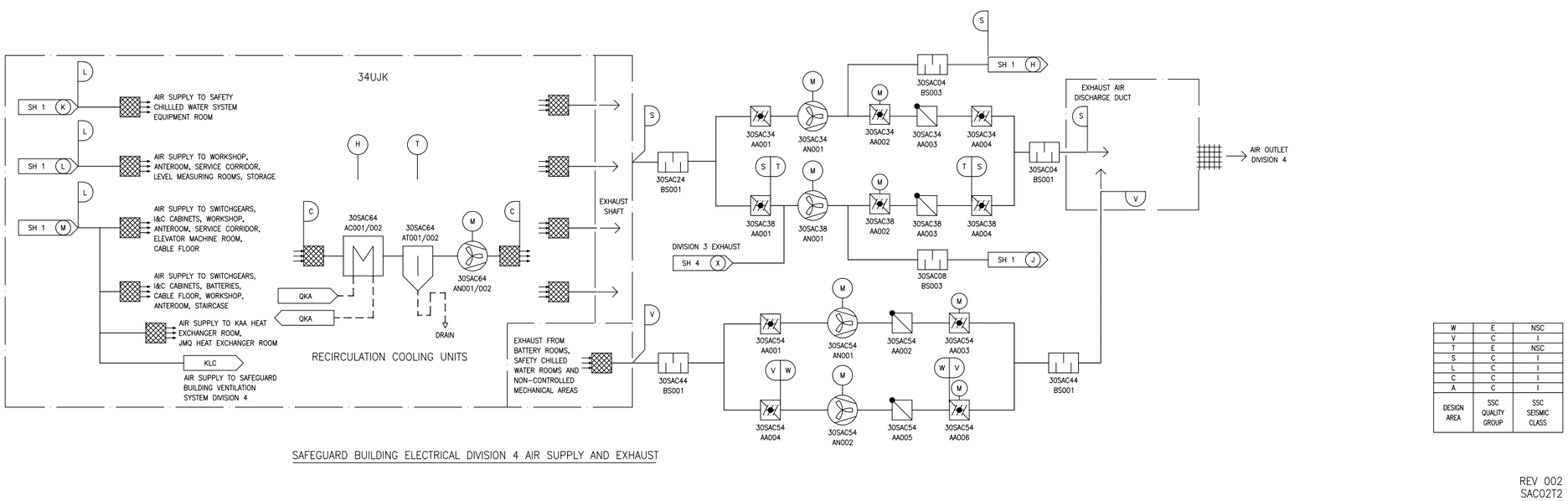

W	E	NSC
V	C	I
T	E	NSC
S	C	I
L	C	I
C	C	I
A	C	I
DESIGN AREA	SSC QUALITY GROUP	SSC SEISMIC CLASS

REV 002
SAC02T2

Figure 9.4.6-3—Safeguard Building Electrical Divisions 2 and 3 Air Intake

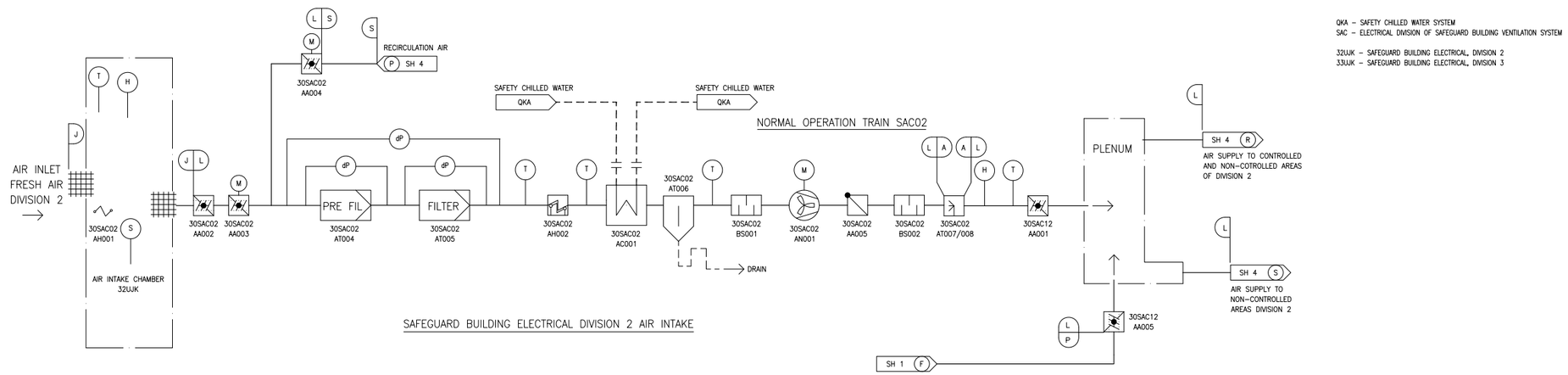

QKA – SAFETY CHILLED WATER SYSTEM
SAC – ELECTRICAL DIVISION OF SAFEGUARD BUILDING VENTILATION SYSTEM

32UJK – SAFEGUARD BUILDING ELECTRICAL, DIVISION 2
33UJK – SAFEGUARD BUILDING ELECTRICAL, DIVISION 3

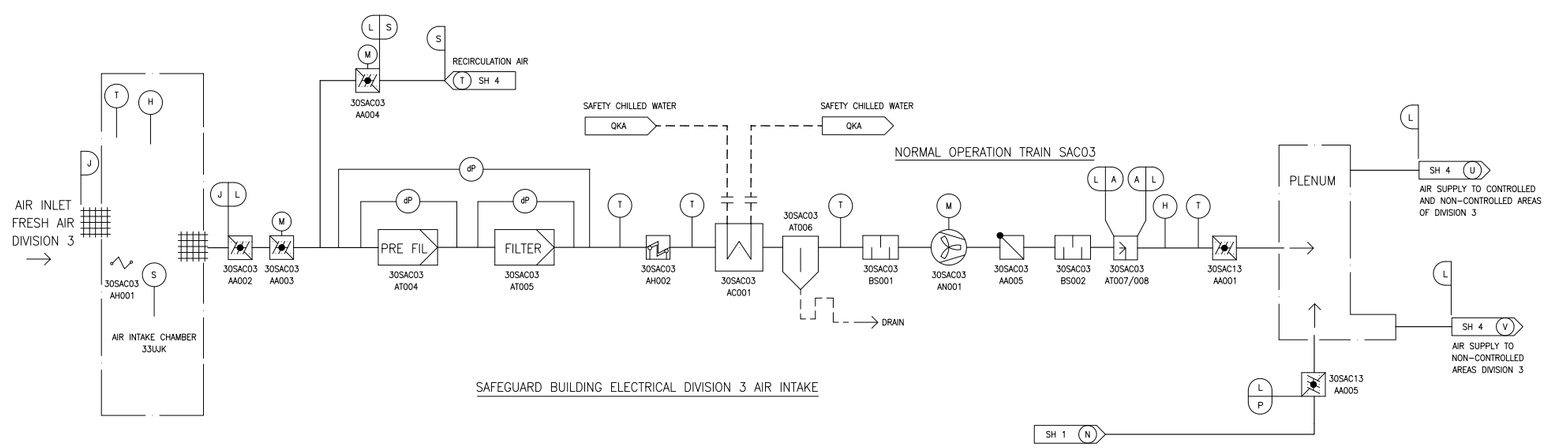

S	C	I
P	E	NSC
L	C	I
J	C	I
A	D	II NS–AQ
DESIGN AREA	SSC QUALITY GROUP	SSC SEISMIC CLASS

REV 002
SAC03T2

Figure 9.4.6-4—Safeguard Building Electrical Divisions 2 and 3 Air Supply and Exhaust

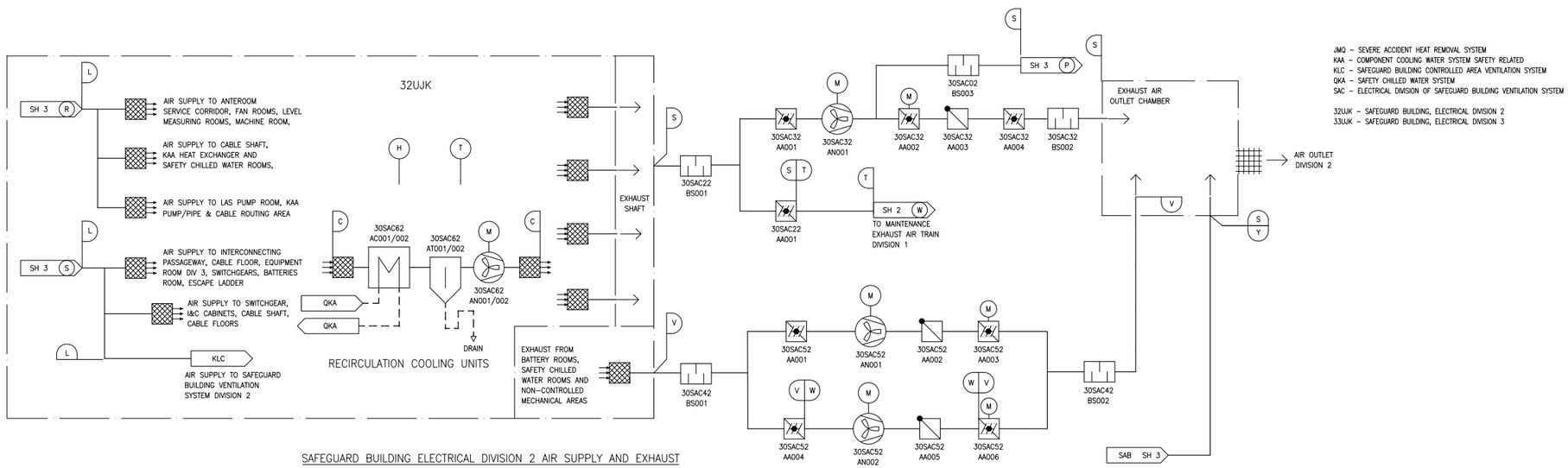

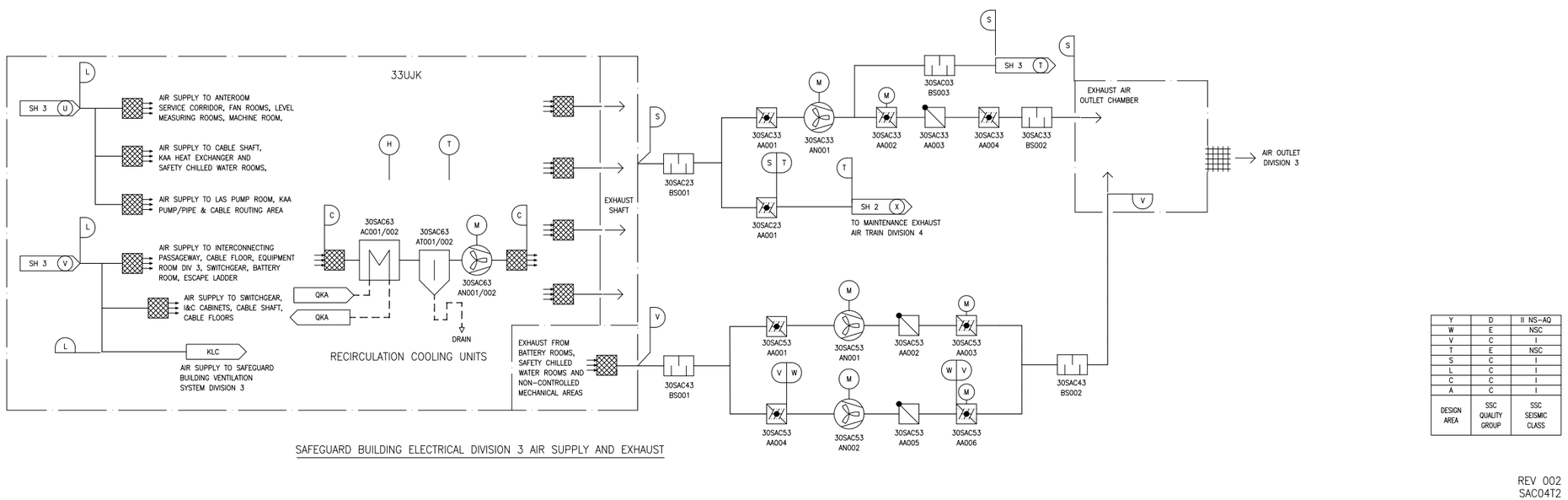

Y	D	II NS–AQ
W	E	NSC
V	C	I
T	E	NSC
S	C	I
L	C	I
C	C	I
A	C	I
DESIGN AREA	SSC QUALITY GROUP	SSC SEISMIC CLASS

REV 002
SAC04T2

Next File