Figure 9.4.1-1—Control Room Air Intake and CREF (Iodine Filtration) Train Subsystem

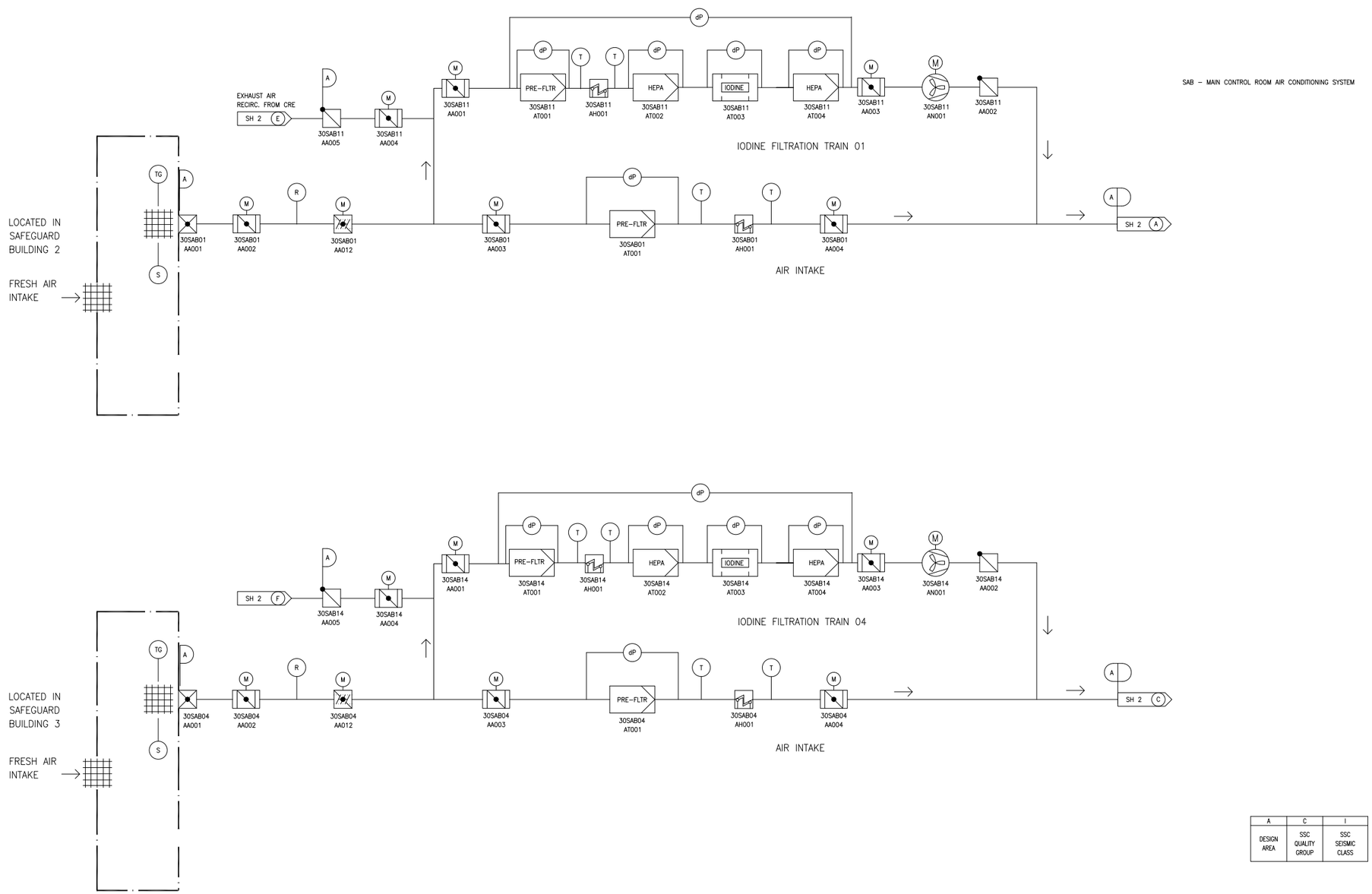

Figure 9.4.1-2—Control Room Air Conditioning and Recirculation Air Handling Subsystem

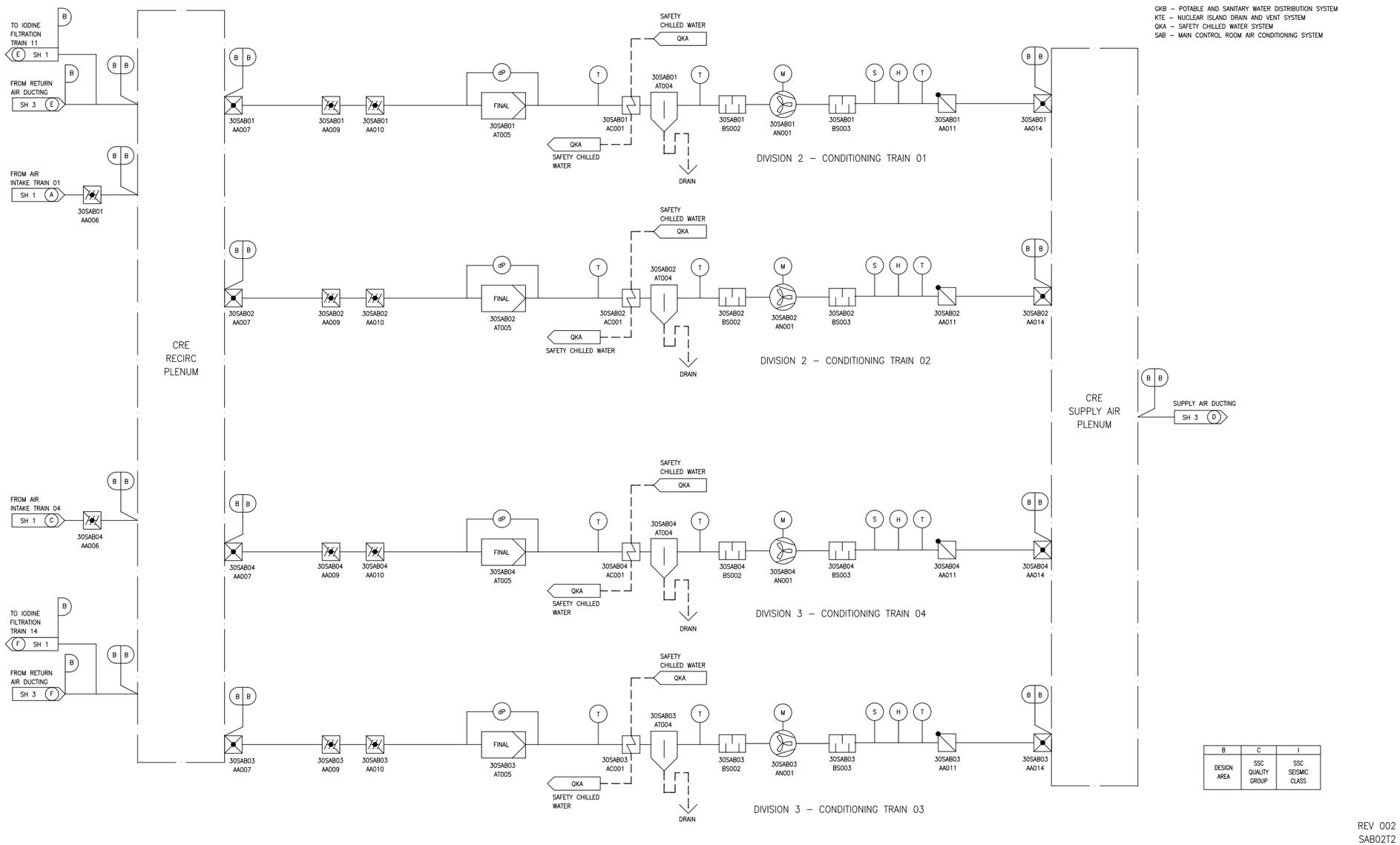

Figure 9.4.1-3—Control Room Envelope Air Supply and Recirculation Subsystem

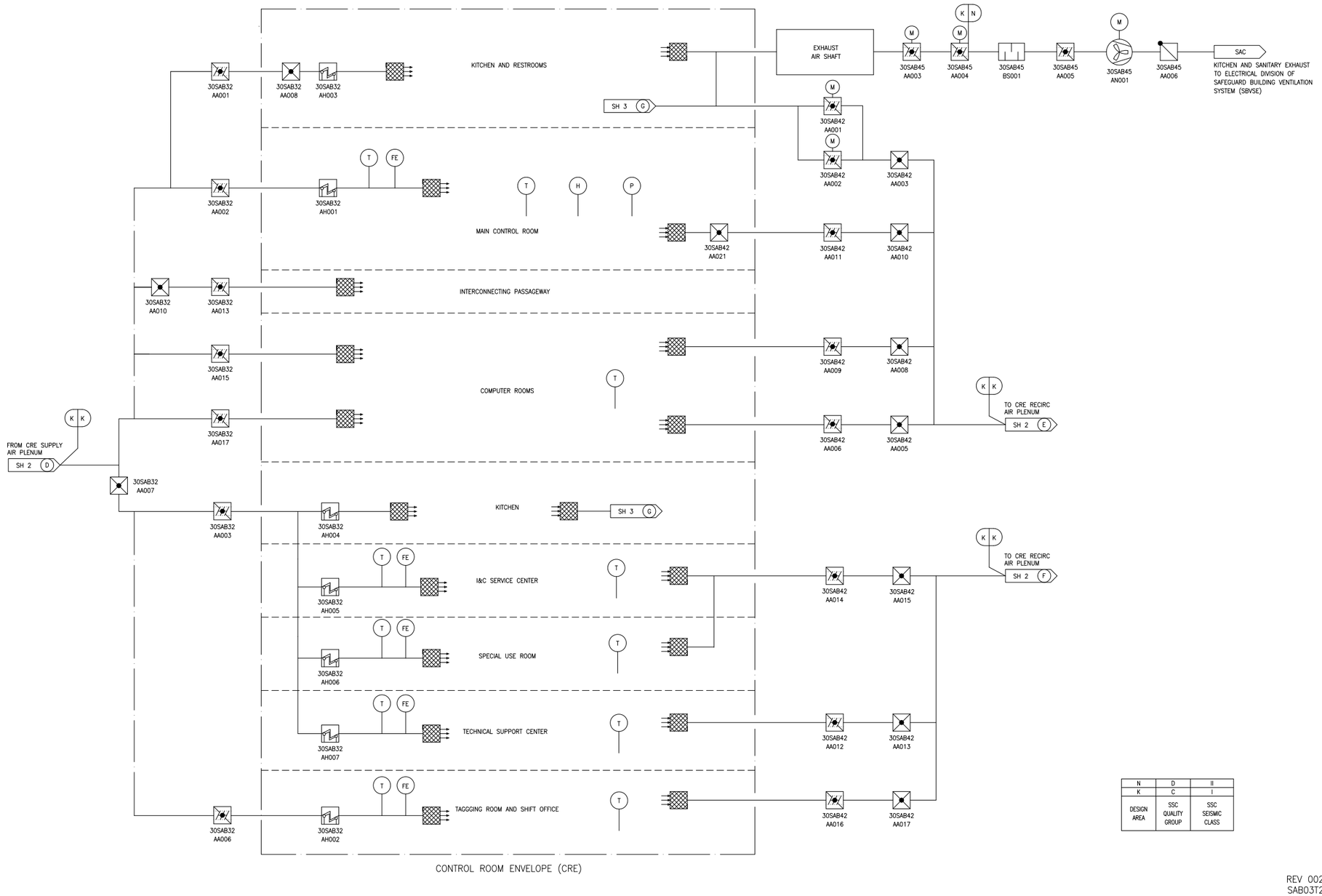

Next File