Figure 9.3.2-1—Nuclear Sampling System
Sheet 1 of 9

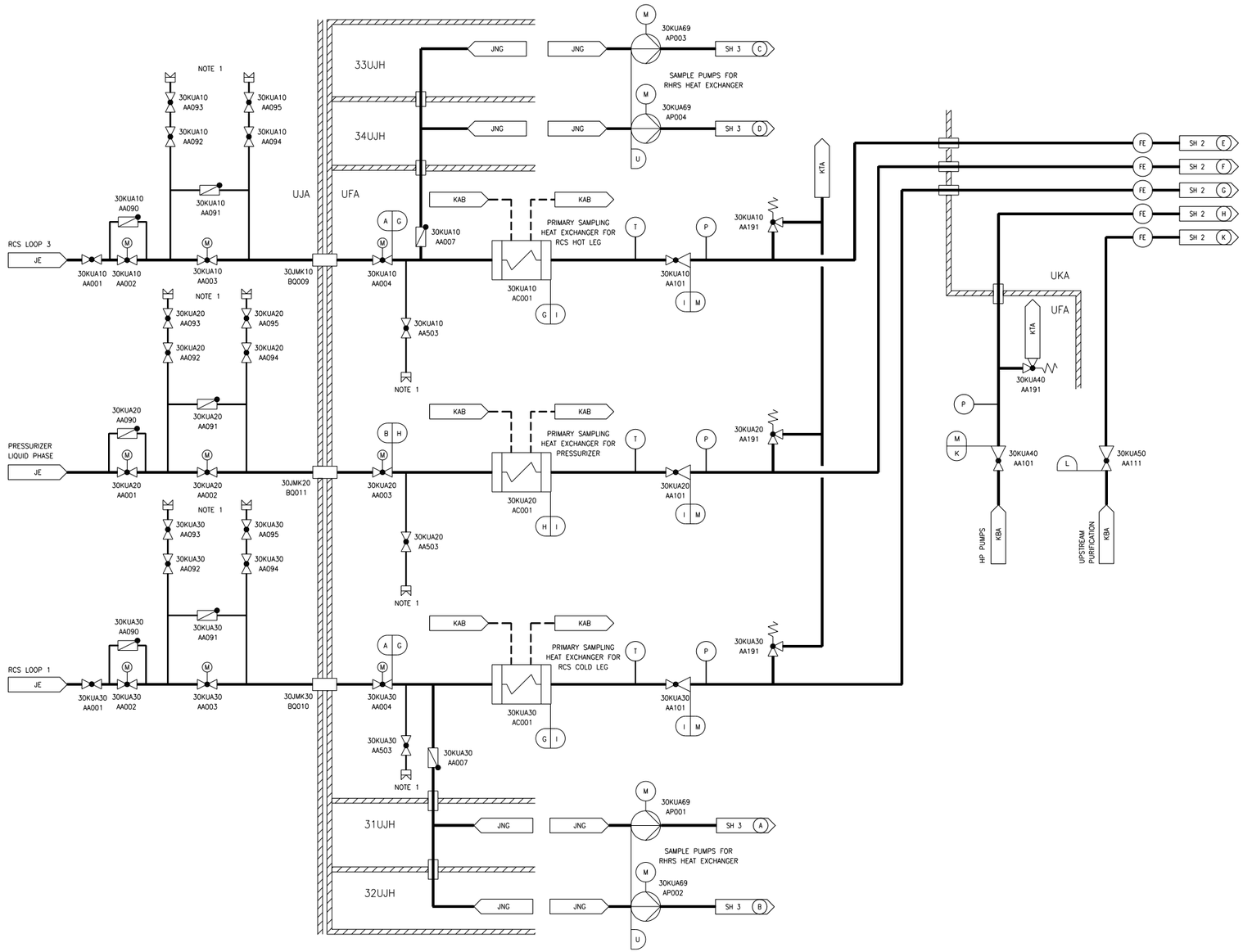

JE – REACTOR COOLANT SYSTEM
JNG – LOW HEAD SAFETY INJECTION SYSTEM
KAB – COMPONENT COOLING WATER SYSTEM COMMON HEADER
KBA – VOLUME CONTROL SYSTEM
KTA – NUCLEAR ISLAND DRAIN AND VENT SYSTEMS – PRIMARY EFFLUENTS
KUA – NUCLEAR SAMPLING SYSTEM – ACTIVE LIQUID SAMPLES

UFA – FUEL BUILDING
UJA – REACTOR BUILDING
UKA – NUCLEAR AUXILIARY BUILDING
31UJH – SAFEGUARD BUILDING MECHANICAL, DIVISION 1
32UJH – SAFEGUARD BUILDING MECHANICAL, DIVISION 2
33UJH – SAFEGUARD BUILDING MECHANICAL, DIVISION 3
34UJH – SAFEGUARD BUILDING MECHANICAL, DIVISION 4

NOTE:
1. CONNECTION FOR CONTAINMENT LEAK TIGHTNESS TEST.

U	D	1160	356	NSC
M	D	290	212	NSC
L	D	174	212	NSC
K	D	3626	212	NSC
I	D	2535	212	NSC
H	D	2535	684	NSC
G	D	2535	664	NSC
B	B	2535	684	I
A	B	2535	664	I
DESIGN AREA	SSC QUALITY GROUP	DESIGN PRESSURE PSIG	DESIGN TEMPERATURE °F	SSC SEISMIC CLASS

KUA01T2

Figure 9.3.2-1—Nuclear Sampling System
Sheet 2 of 9

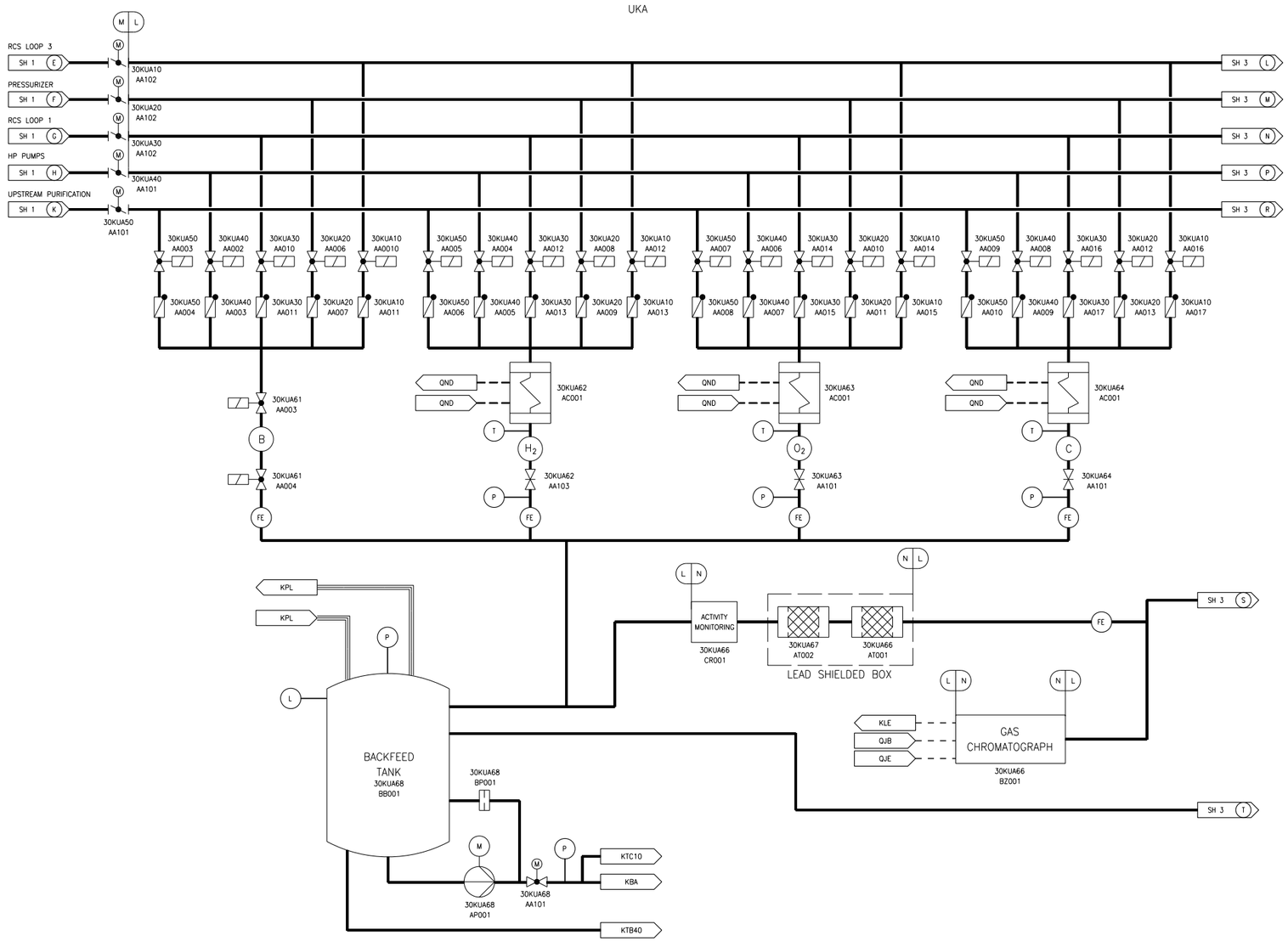

KBA – VOLUME CONTROL SYSTEM
KLE – NUCLEAR AUXILIARY BUILDING VENTILATION SYSTEM
KPL – GASEOUS WASTE PROCESSING SYSTEM
KTB40 – NUCLEAR ISLAND DRAIN AND VENT SYSTEMS, PROCESS DRAINS INSIDE NUCLEAR AUXILIARY BUILDING
KTC10 – NUCLEAR ISLAND DRAIN AND VENT SYSTEMS, FLOOR DRAINS 1 INSIDE REACTOR BUILDING
KUA – NUCLEAR SAMPLING SYSTEM – ACTIVE LIQUID SAMPLES
QJB – NITROGEN (N2) GAS DISTRIBUTION SYSTEM
QJE – ARGON (AR) GAS DISTRIBUTION SYSTEM
QND – SUPPLY TO GASEOUS WASTE PROCESSING SYSTEM/COOLANT DEGASIFICATION SYSTEM COMPONENTS

UKA – NUCLEAR AUXILIARY BUILDING

DESIGN AREA	SSC QUALITY GROUP	DESIGN PRESSURE PSIG	DESIGN TEMPERATURE °F	SSC SEISMIC CLASS
N	D	0	212	NSC
M	D	290	212	NSC
L	D	174	212	NSC

KUA02T2

Figure 9.3.2-1—Nuclear Sampling System
Sheet 3 of 9

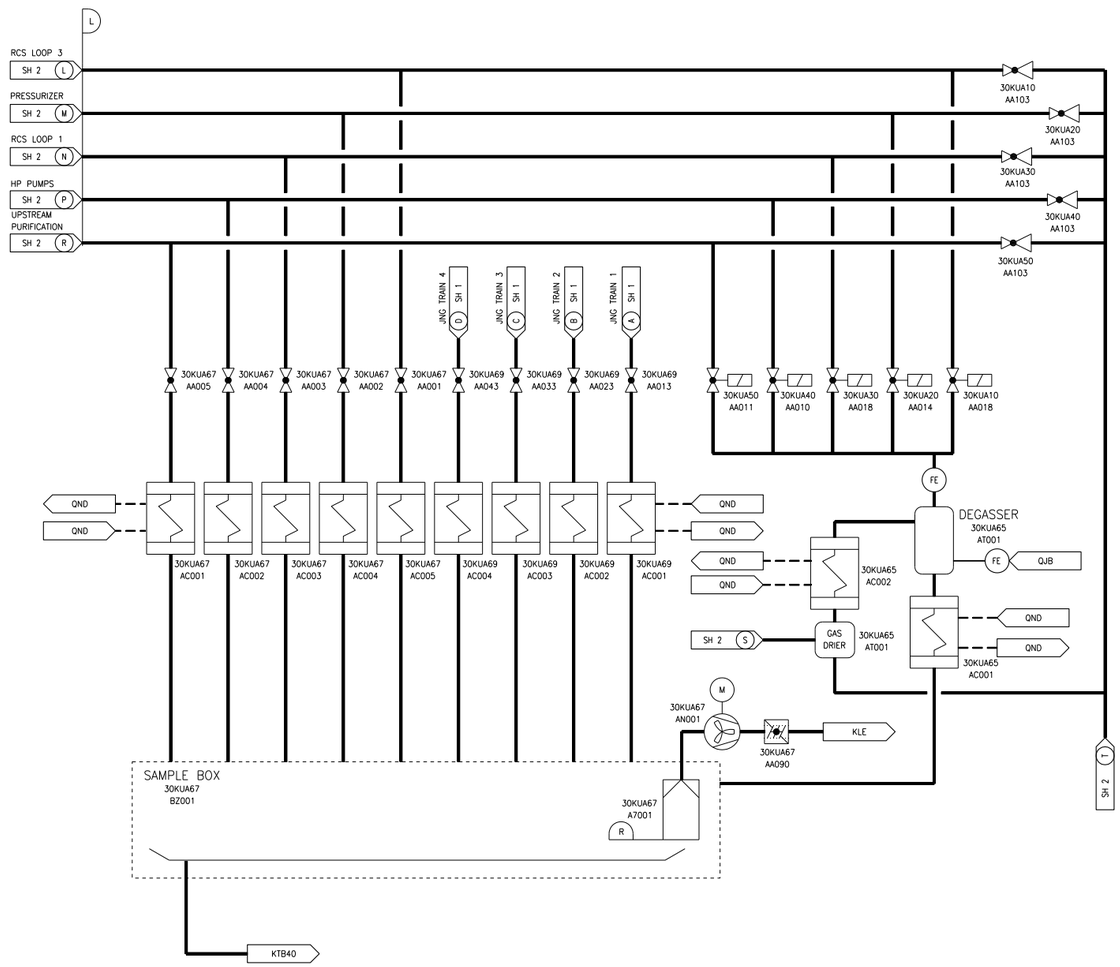

UKA

JNG – LOW HEAD SAFETY INJECTION SYSTEM
KLE – NUCLEAR AUXILIARY BUILDING VENTILATION SYSTEM
KTB40 – NUCLEAR ISLAND DRAIN AND VENT SYSTEMS, PROCESS DRAINS INSIDE NUCLEAR AUXILIARY BUILDING
KUA – NUCLEAR SAMPLING SYSTEM – ACTIVE LIQUID SAMPLES
QJB – NITROGEN (N2) GAS DISTRIBUTION SYSTEM
QND – SUPPLY TO GASEOUS WASTE PROCESSING SYSTEM/COOLANT DEGASIFICATION SYSTEM COMPONENTS

UKA – NUCLEAR AUXILIARY BUILDING

R	D	15	122	NSC
L	D	174	212	NSC
DESIGN AREA	SSC QUALITY GROUP	DESIGN PRESSURE PSIG	DESIGN TEMPERATURE °F	SSC SEISMIC CLASS

KUA03T2

Figure 9.3.2-1—Nuclear Sampling System
Sheet 4 of 9

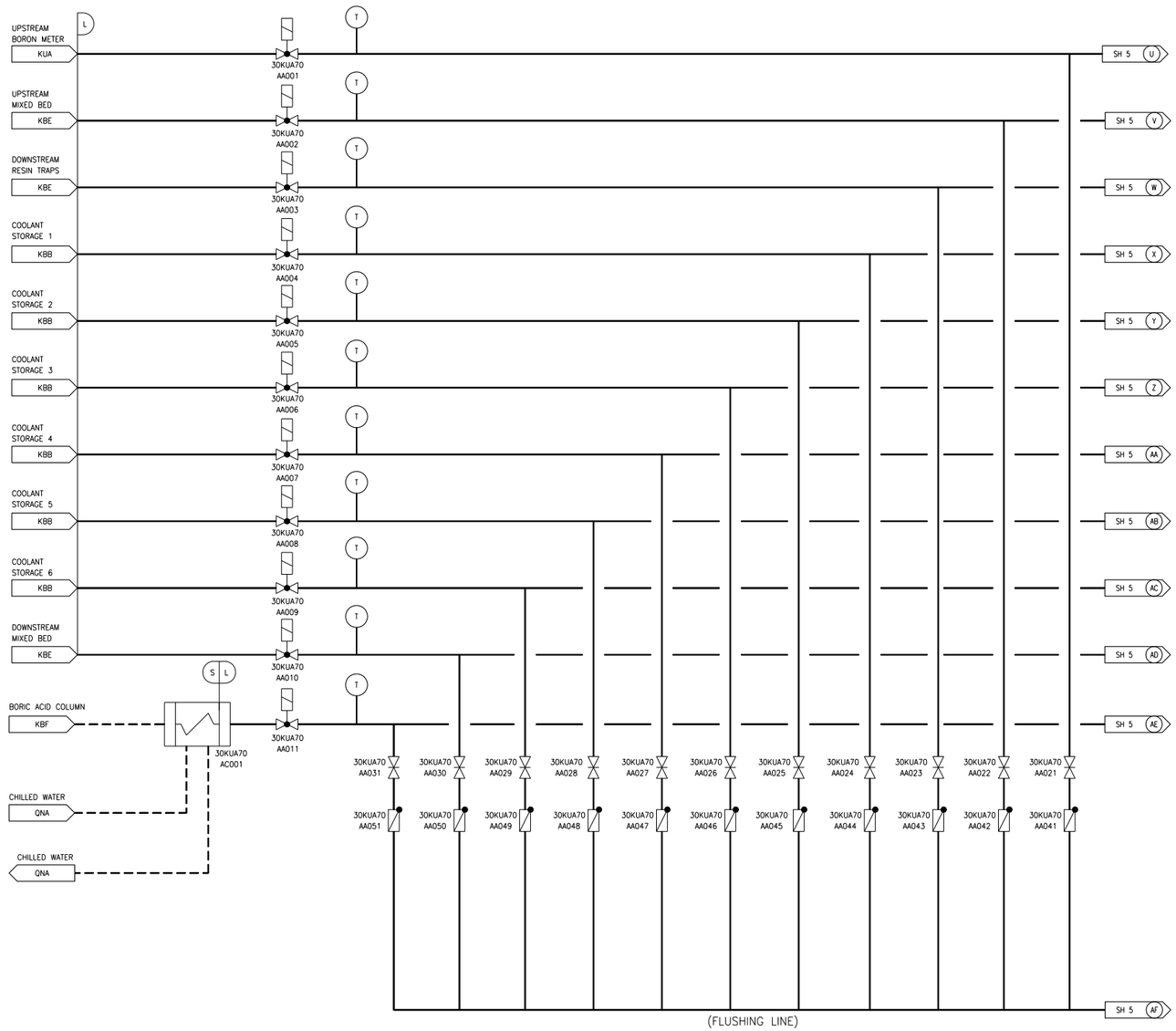

KBB – COOLANT SUPPLY AND STORAGE SYSTEM
KBE – COOLANT PURIFICATION SYSTEM
KBF – COOLANT TREATMENT SYSTEM
KUA – NUCLEAR SAMPLING SYSTEM – ACTIVE LIQUID SAMPLES
QNA – OPERATIONAL CHILLED WATER SYSTEM

UKA – NUCLEAR AUXILIARY BUILDING

UKA

S	D	174	302	NSC
L	D	174	212	NSC
DESIGN AREA	SSC QUALITY GROUP	DESIGN PRESSURE PSIG	DESIGN TEMPERATURE °F	SSC SEISMIC CLASS

KUA04T2

Figure 9.3.2-1—Nuclear Sampling System
Sheet 5 of 9

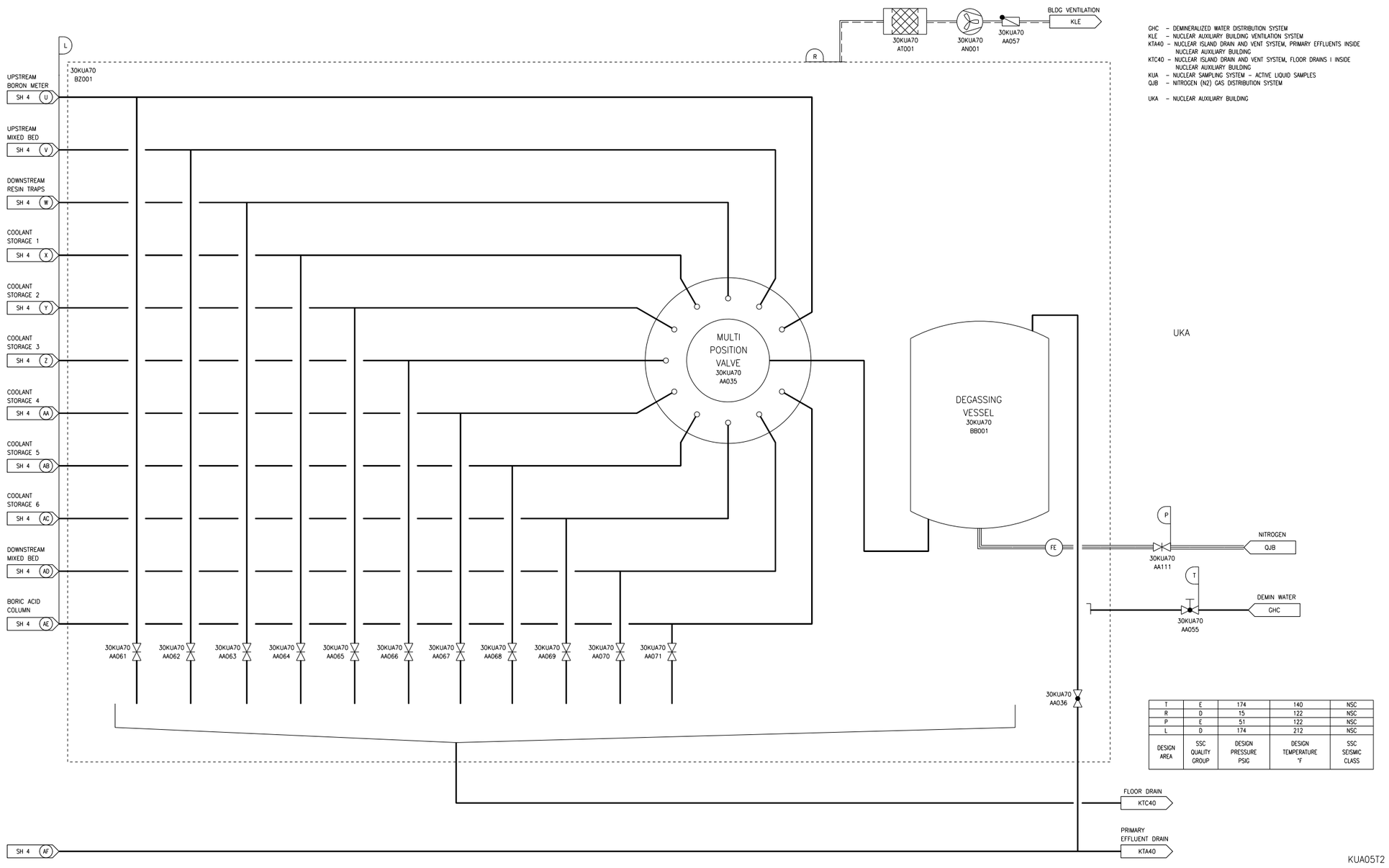

T	E	174	140	NSC
R	D	15	122	NSC
P	E	51	122	NSC
L	D	174	212	NSC
DESIGN AREA	SSC QUALITY GROUP	DESIGN PRESSURE PSIG	DESIGN TEMPERATURE °F	SSC SEISMIC CLASS

Figure 9.3.2-1—Nuclear Sampling System
Sheet 6 of 9

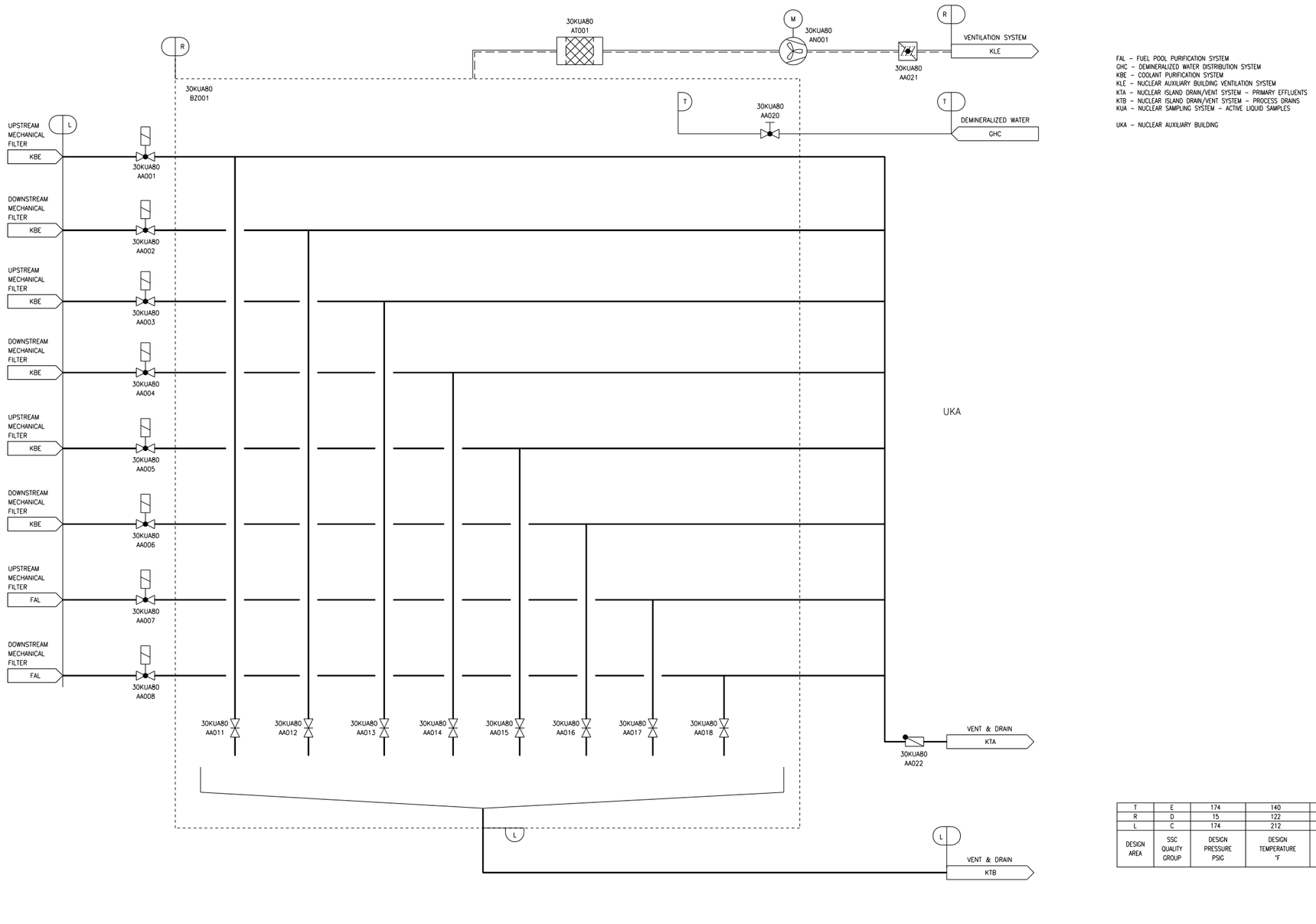

Figure 9.3.2-1—Nuclear Sampling System
Sheet 7 of 9

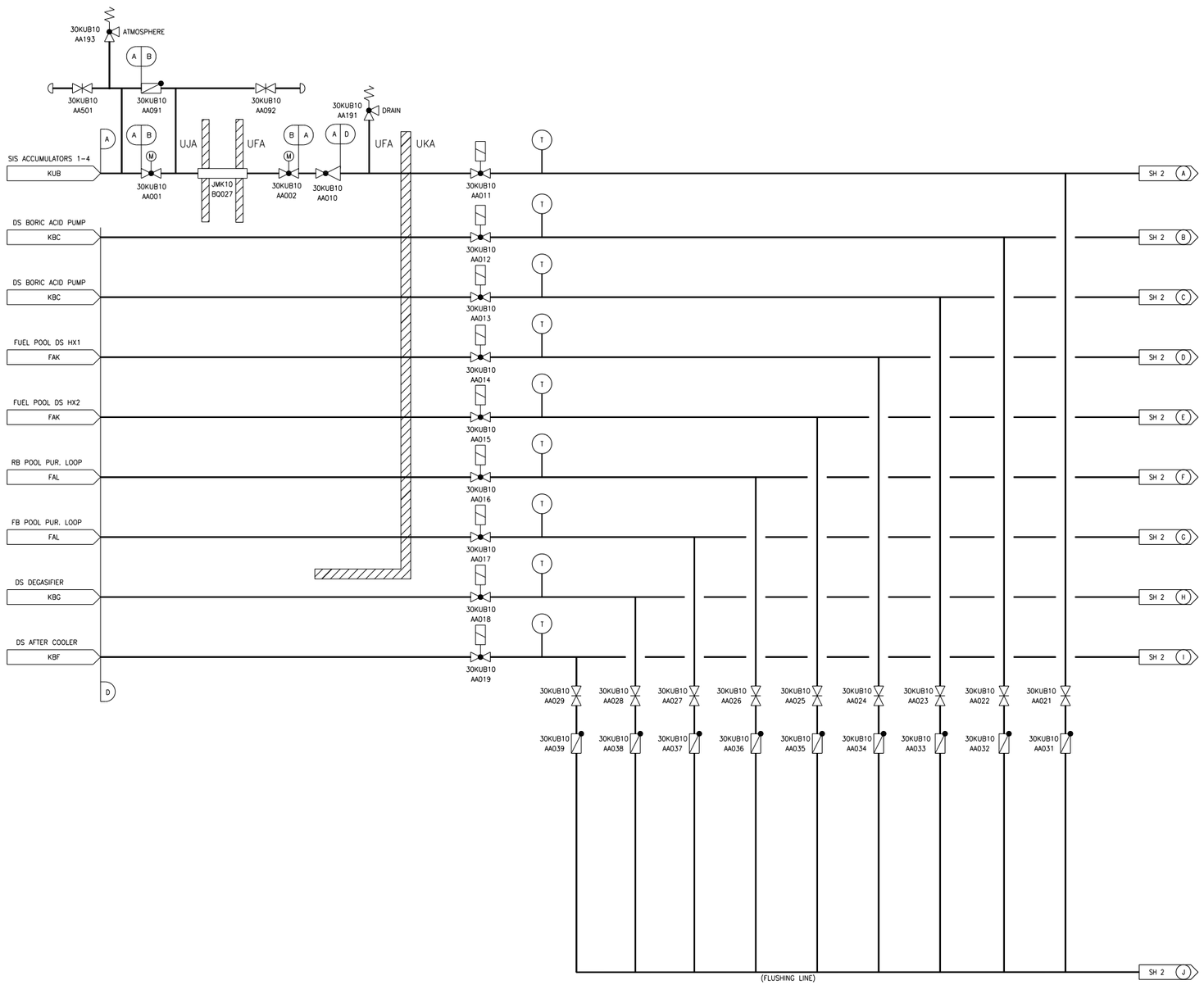

FAK – FUEL POOL COOLING SYSTEM
FAL – FUEL POOL PURIFICATION SYSTEM
KBC – REACTOR BORON AND WATER MAKEUP SYSTEM
KBF – COOLANT TREATMENT SYSTEM
KBG – COOLANT DEGASIFICATION SYSTEM
KUB – NUCLEAR SAMPLING SYSTEM – SLIGHTLY ACTIVE LIQUID SAMPLES

UFA – FUEL BUILDING
UJA – REACTOR BUILDING
UKA – NUCLEAR AUXILIARY BUIDLING

D	D	174	212	NSC
B	B	798	338	I
A	B	798	140	I
DESIGN AREA	SSC QUALITY GROUP	DESIGN PRESSURE PSIG	DESIGN TEMPERATURE °F	SSC SEISMIC CLASS

KUB01T2

Figure 9.3.2-1—Nuclear Sampling System
Sheet 8 of 9

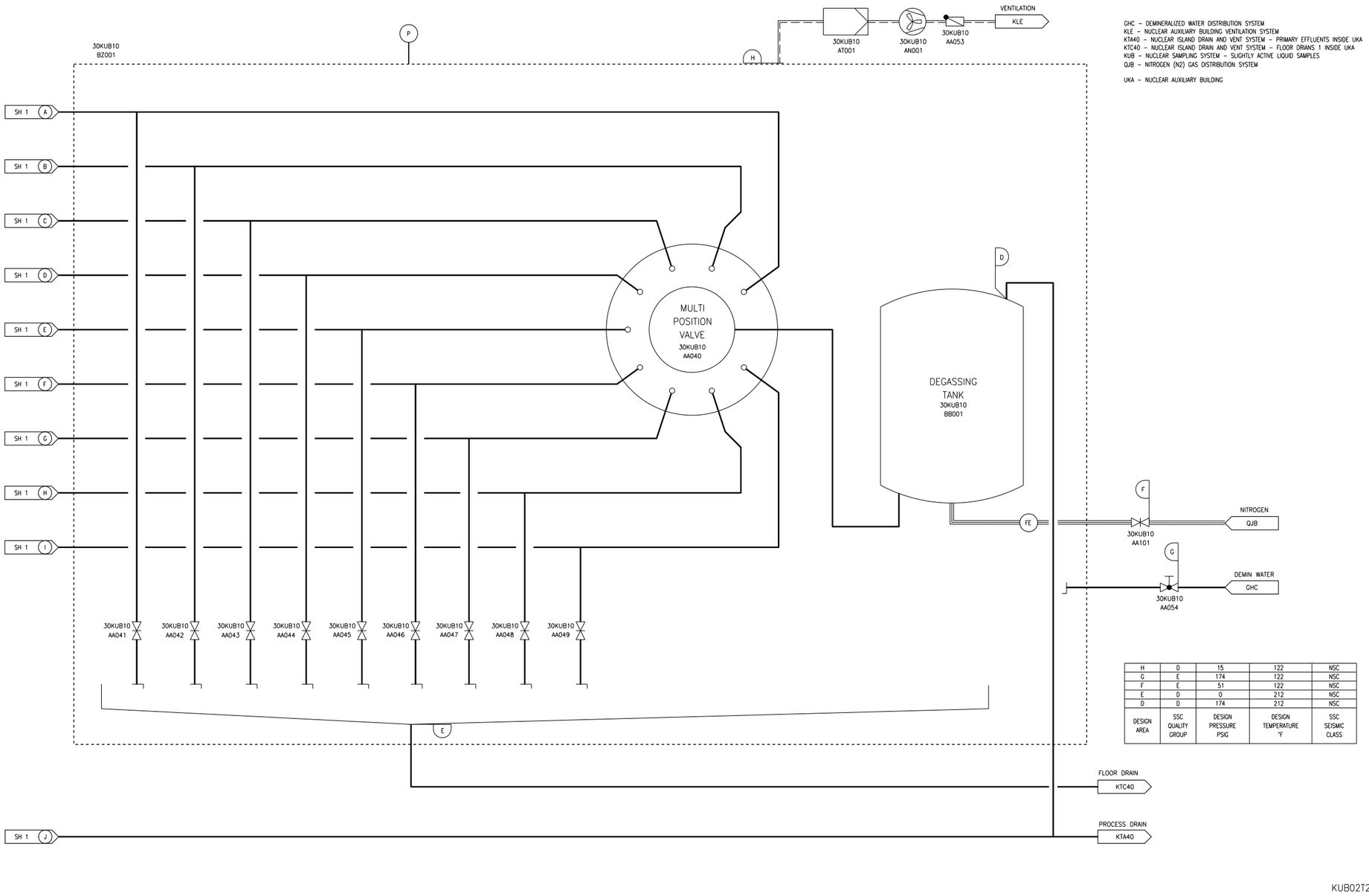

DESIGN AREA	SSC QUALITY GROUP	DESIGN PRESSURE PSIG	DESIGN TEMPERATURE °F	SSC SEISMIC CLASS
H	D	15	122	NSC
G	E	174	122	NSC
F	E	51	122	NSC
E	D	0	212	NSC
D	D	174	212	NSC

Figure 9.3.2-1—Nuclear Sampling System
Sheet 9 of 9

KBB – COOLANT SUPPLY AND STORAGE SYSTEM
KPL – GASEOUS WASTE PROCESSING SYSTEM
KTA20 – NUCLEAR ISLAND DRAIN/VENT SYSTEM, PRIMARY EFFLUENTS INSIDE UJH
KTA30 – NUCLEAR ISLAND DRAIN/VENT SYSTEM, PRIMARY EFFLUENTS INSIDE UFA
KTA40 – NUCLEAR ISLAND DRAIN/VENT SYSTEM, PRIMARY EFFLUENTS INSIDE UKA
KUF – NUCLEAR SAMPLING SYSTEM – GASEOUS SAMPLES

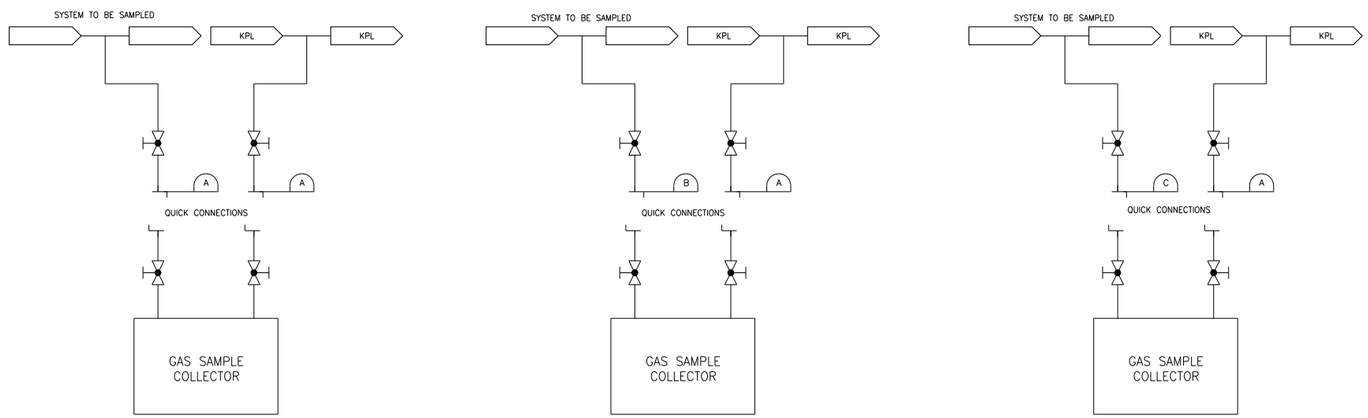

REPRESENTATIVE OF SAMPLES FOR:

–UPSTREAM GAS DRYER (KPL)
–UPSTREAM RECOMBINER (KPL)
–DOWNSTREAM RECOMBINER (KPL)
–KUA BACKFEED VESSEL
–FUEL BUILDING DRAIN TANKS (KTA30 BB001/2)
–NAB DRAIN TANKS (KTA40 BB001)
–SB DRAIN TANKS (KTA20 BB001/2/3/4)
–RCS SWEEPING

REPRESENTATIVE OF SAMPLES FOR:

–KBB STORAGE TANK 6

REPRESENTATIVE OF SAMPLES FOR:

–UPSTREAM DELAY BEDS (KPL)
–DOWNSTREAM DELAY BED 1/2 (KPL)

C	D	290	212	NSC
B	D	44	212	NSC
A	D	174	212	NSC
DESIGN AREA	SSC QUALITY GROUP	DESIGN PRESSURE PSIG	DESIGN TEMPERATURE °F	SSC SEISMIC CLASS

KUF01T2

Figure 9.3.2-2—Severe Accident Sampling System

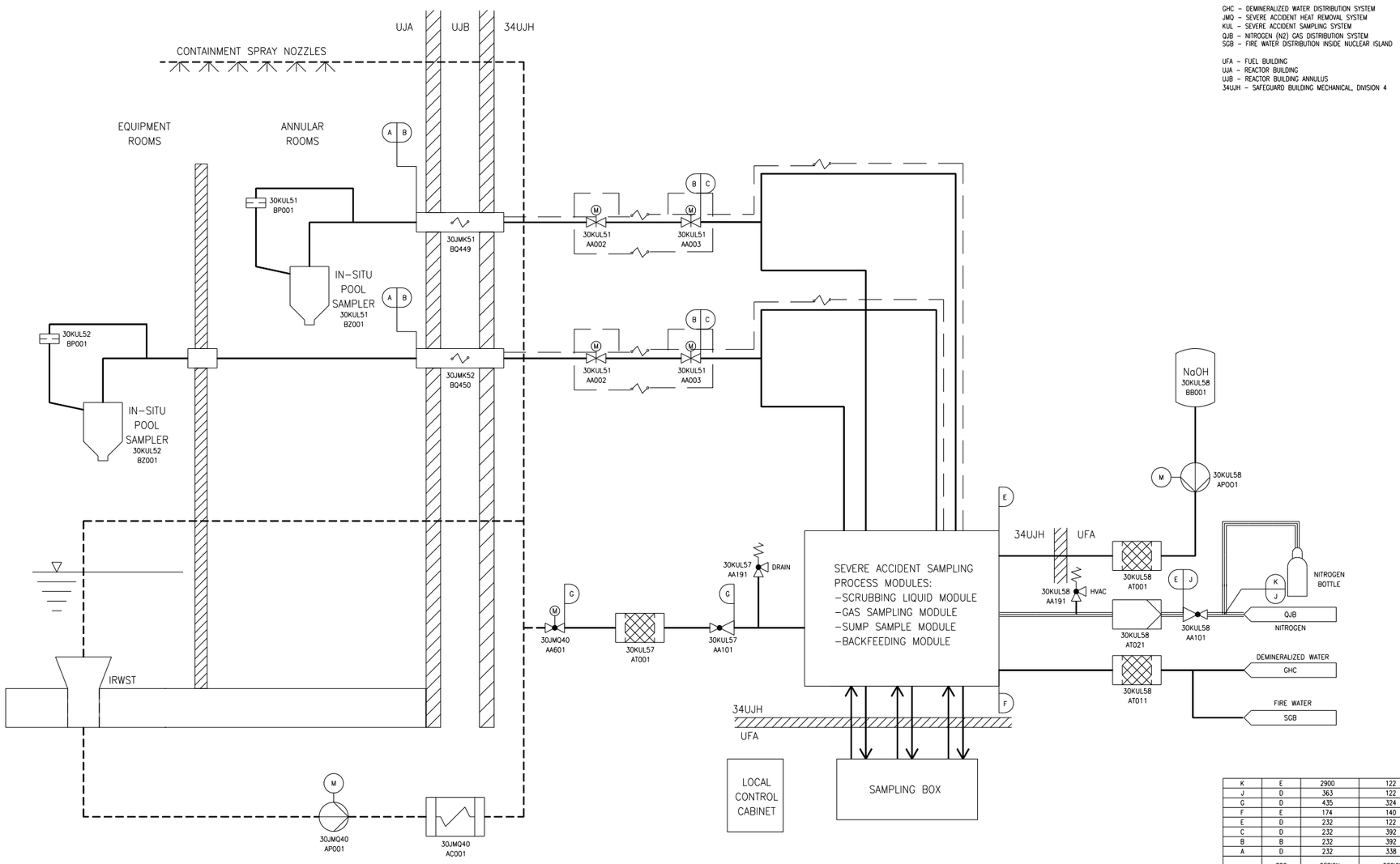

DESIGN AREA	SSC QUALITY GROUP	DESIGN PRESSURE PSIG	DESIGN TEMPERATURE °F	SSC SEISMIC CLASS
K	E	2900	122	NSC
J	D	363	122	NSC
G	D	435	324	NSC
F	E	174	140	NSC
E	D	232	122	NSC
C	D	232	392	NSC
B	B	232	392	I
A	D	232	338	NSC

Next File