Figure 9.3.1-1—Compressed Air Generation System

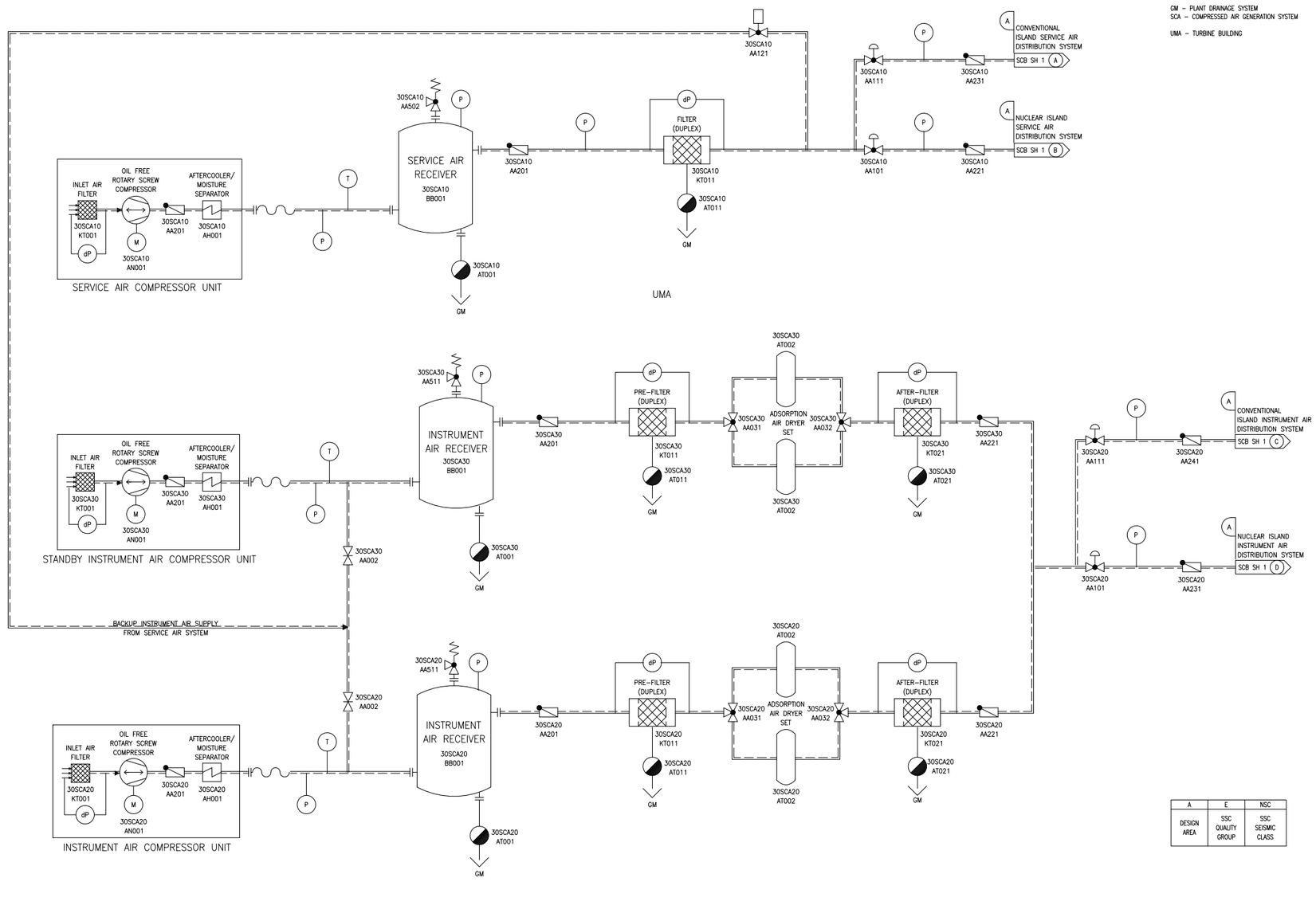

Figure 9.3.1-2—Compressed Air Distribution System

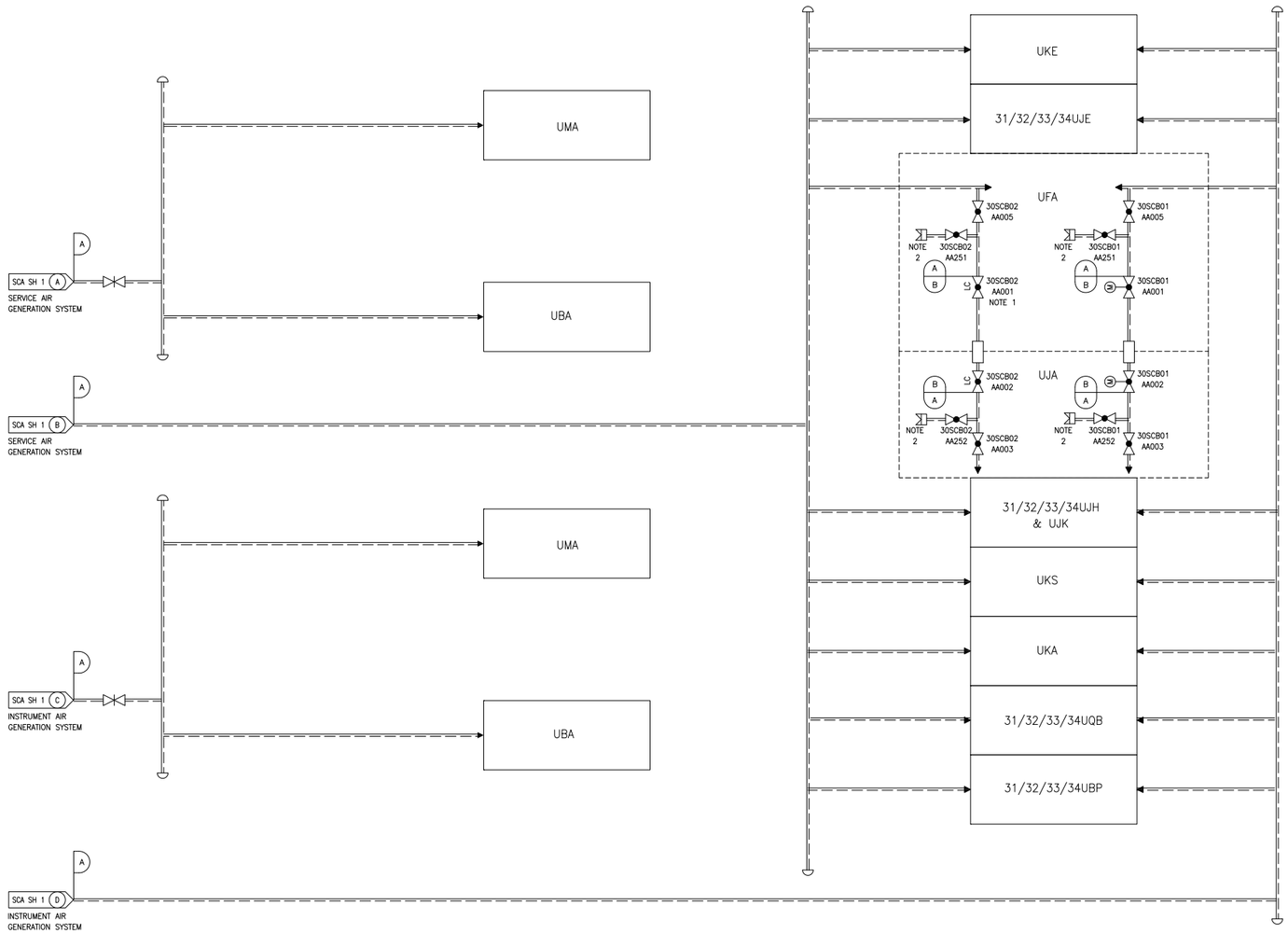

SCA – COMPRESSED AIR GENERATION SYSTEM
SCB – COMPRESSED AIR DISTRIBUTION SYSTEM

UBA – SWITCHGEAR BUILDING
31UBP – EMERGENCY POWER GENERATING, BUILDING 1
32UBP – EMERGENCY POWER GENERATING, BUILDING 2
33UBP – EMERGENCY POWER GENERATING, BUILDING 3
34UBP – EMERGENCY POWER GENERATING, BUILDING 4
UFA – FUEL BUILDING
UJA – REACTOR BUILDING
31UJE – MAIN STEAM VALVE ROOM, DIVISION 1
32UJE – MAIN STEAM VALVE ROOM, DIVISION 2
33UJE – MAIN STEAM VALVE ROOM, DIVISION 3
34UJE – MAIN STEAM VALVE ROOM, DIVISION 4
31UJH – SAFEGUARD BUILDING MECHANICAL, DIVISION 1
32UJH – SAFEGUARD BUILDING MECHANICAL, DIVISION 2
33UJH – SAFEGUARD BUILDING MECHANICAL, DIVISION 3
34UJH – SAFEGUARD BUILDING MECHANICAL, DIVISION 4
31UJK – SAFEGUARD BUILDING ELECTRICAL, DIVISION 1
32UJK – SAFEGUARD BUILDING ELECTRICAL, DIVISION 2
33UJK – SAFEGUARD BUILDING ELECTRICAL, DIVISION 3
34UJK – SAFEGUARD BUILDING ELECTRICAL, DIVISION 4
UKA – NUCLEAR AUXILIARY BUILDING
UKE – ACCESS BUILDING
UKS – RADIOACTIVE WASTE PROCESSING BUILDING
UMA – TURBINE BUILDING
31UQB – ESSENTIAL SERVICE WATER PUMP, BUILDING 1
32UQB – ESSENTIAL SERVICE WATER PUMP, BUILDING 2
33UQB – ESSENTIAL SERVICE WATER PUMP, BUILDING 3
34UQB – ESSENTIAL SERVICE WATER PUMP, BUILDING 4

LC – LOCKED CLOSED

NOTES:

1. SERVICE AIR CONTAINMENT ISOLATION VALVES ARE LOCKED CLOSED (LC) DURING POWER OPERATION AND MANUALLY OPENED DURING PLANT OUTAGES.

2. TEST CONNECTIONS ARE PROVIDED FOR LOCAL LEAK RATE TEST (LLRT) OF THE CONTAINMENT PENETRATION BOUNDARY.

B	B	I
A	E	NSC
DESIGN AREA	SSC QUALITY GROUP	SSC SEISMIC CLASS

REV 001
SCB01T2

Next File