Figure 9.2.8-1—Safety Chilled Water System Diagram
Sheet 1 of 4

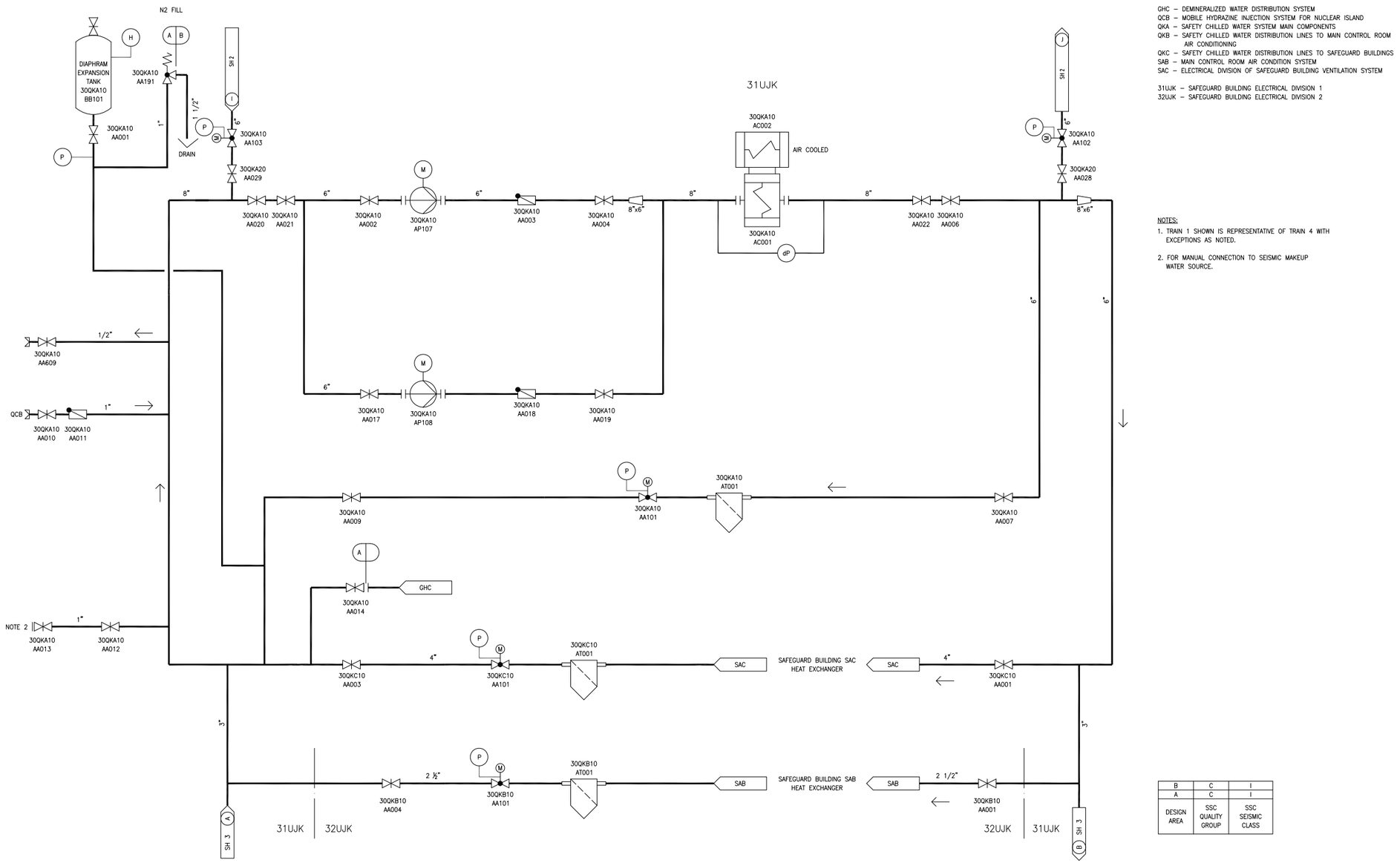

GHC – DEMINERALIZED WATER DISTRIBUTION SYSTEM
QCB – MOBILE HYDRAZINE INJECTION SYSTEM FOR NUCLEAR ISLAND
QKA – SAFETY CHILLED WATER SYSTEM MAIN COMPONENTS
QKB – SAFETY CHILLED WATER DISTRIBUTION LINES TO MAIN CONTROL ROOM AIR CONDITIONING
QKC – SAFETY CHILLED WATER DISTRIBUTION LINES TO SAFEGUARD BUILDINGS
SAB – MAIN CONTROL ROOM AIR CONDITION SYSTEM
SAC – ELECTRICAL DIVISION OF SAFEGUARD BUILDING VENTILATION SYSTEM

31UJK – SAFEGUARD BUILDING ELECTRICAL DIVISION 1
32UJK – SAFEGUARD BUILDING ELECTRICAL DIVISION 2

NOTES:
1. TRAIN 1 SHOWN IS REPRESENTATIVE OF TRAIN 4 WITH EXCEPTIONS AS NOTED.
2. FOR MANUAL CONNECTION TO SEISMIC MAKEUP WATER SOURCE.

B	C	I
A	C	I
DESIGN AREA	SSC QUALITY GROUP	SSC SEISMIC CLASS

REV 002
QKA01T2

Figure 9.2.8-1—Safety Chilled Water System Diagram
Sheet 2 of 4

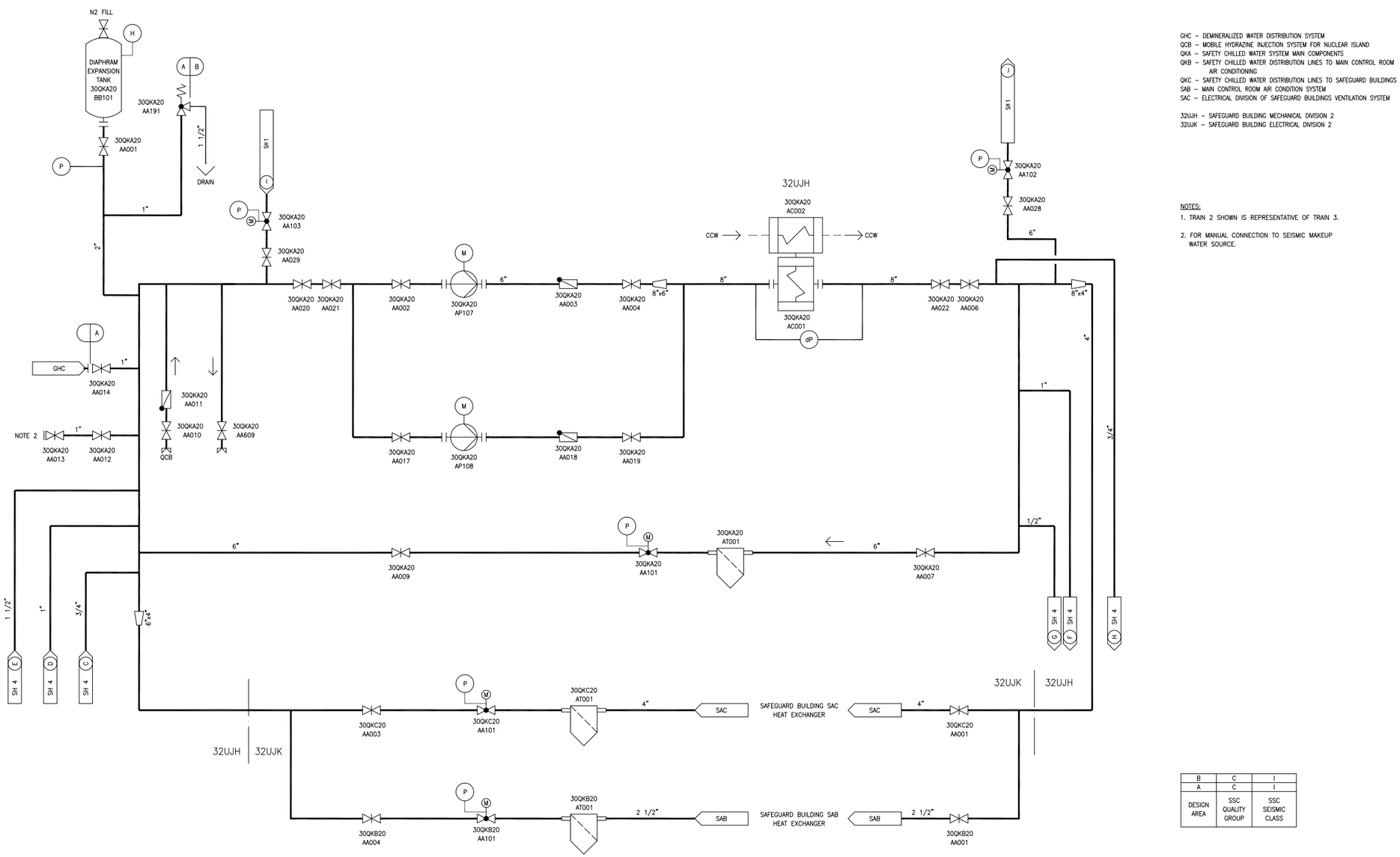

Figure 9.2.8-1—Safety Chilled Water System Diagram
Sheet 3 of 4

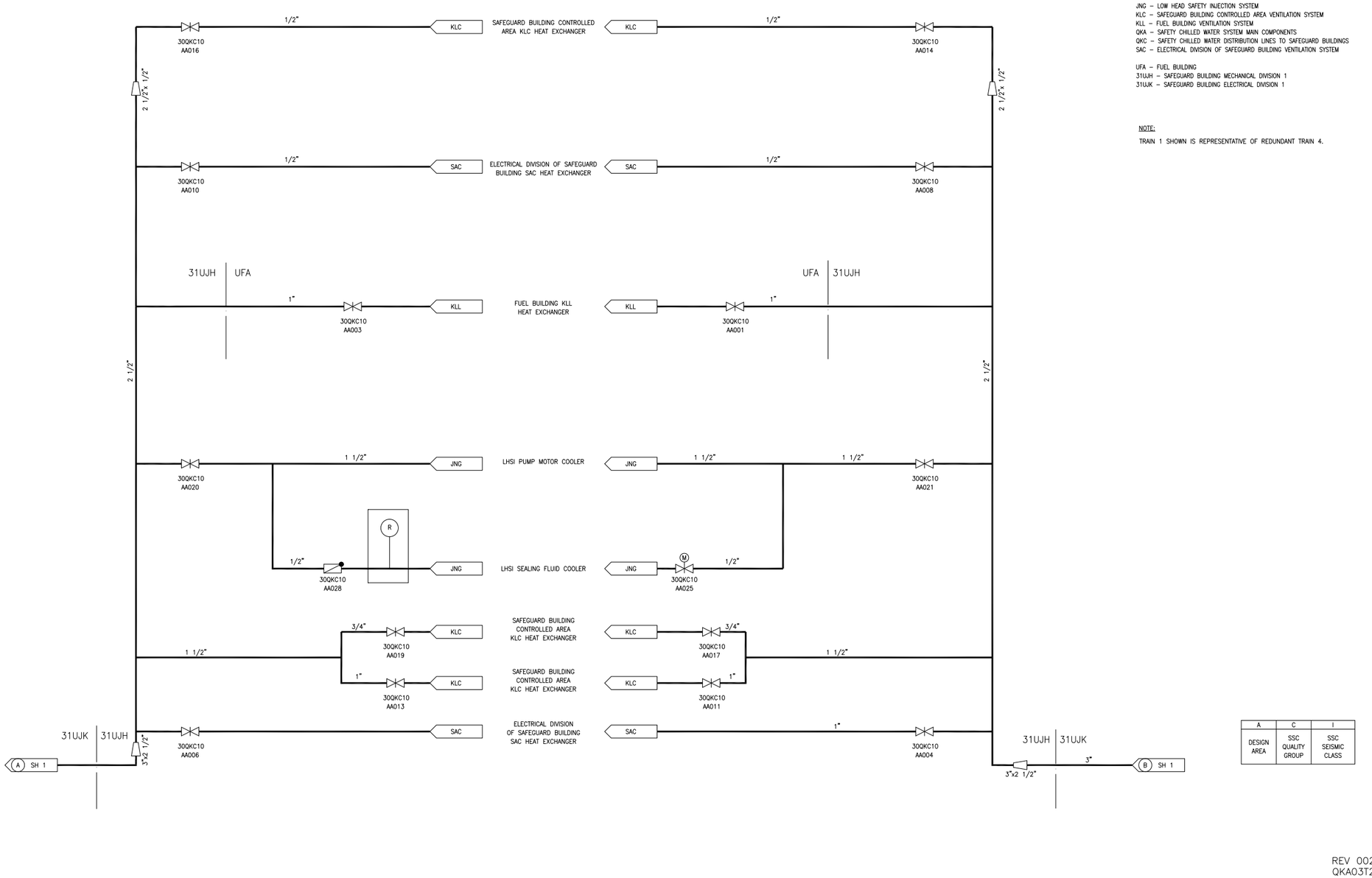

Figure 9.2.8-1—Safety Chilled Water System Diagram
Sheet 4 of 4

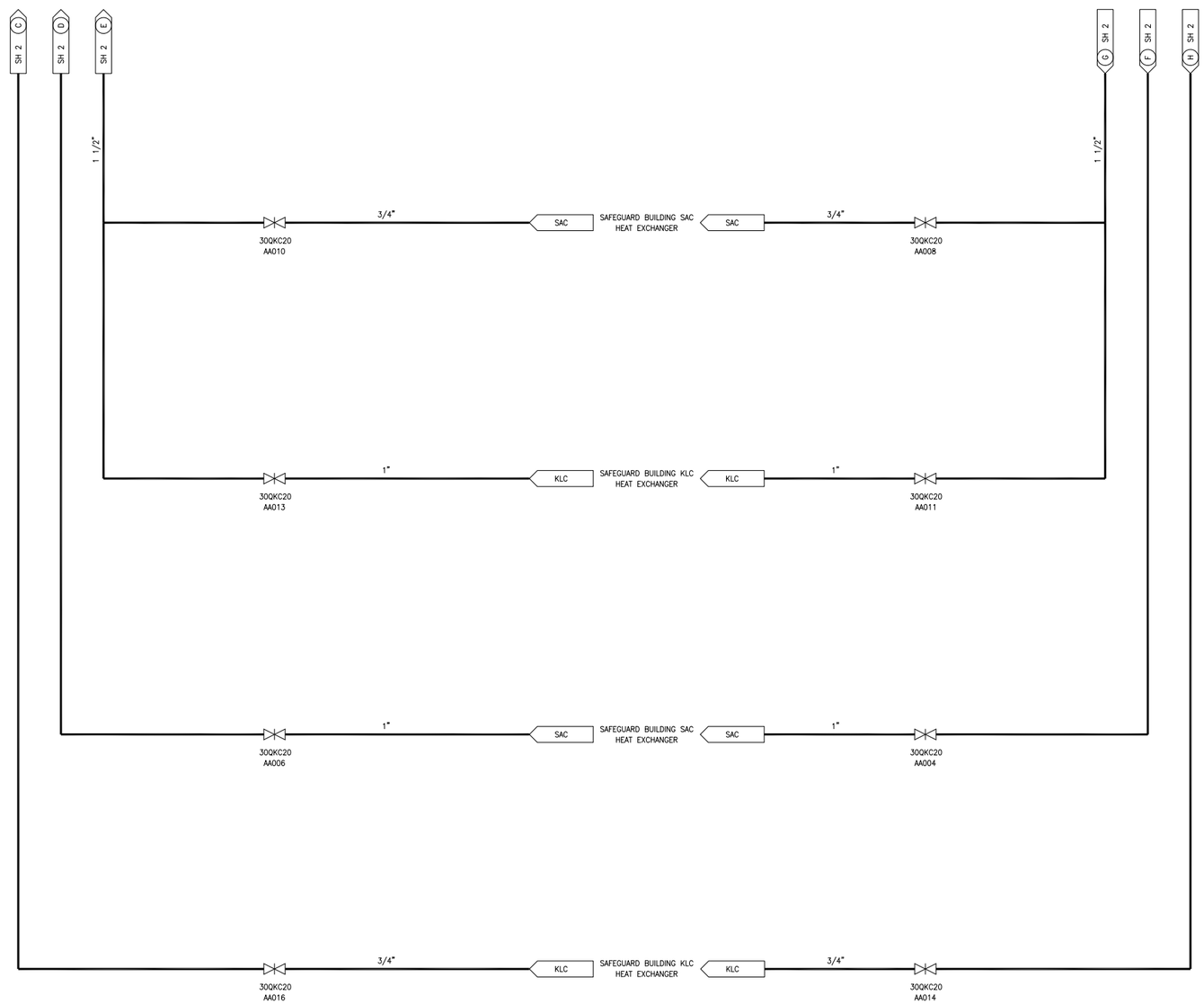

KLC – SAFEGUARD BUILDING CONTROLLED AREA VENTILATION SYSTEM
QKA – SAFETY CHILLED WATER SYSTEM MAIN COMPONENTS
QKC – SAFETY CHILLED WATER DISTRIBUTION LINES TO SAFEGUARD BUILDINGS
SAC – ELECTRICAL DIVISION OF SAFEGUARD BUILDING VENTILATION SYSTEM

32UJH – SAFEGUARD BUILDING MECHANICAL DIVISION 2

NOTE:

TRAIN 2 SHOWN IS REPRESENTATIVE OF REDUNDANT TRAIN 3.

A	C	I
DESIGN AREA	SSC QUALITY GROUP	SSC SEISMIC CLASS

REV 002
QKA04T2

Next File