Figure 7.1-6—Protection System Architecture

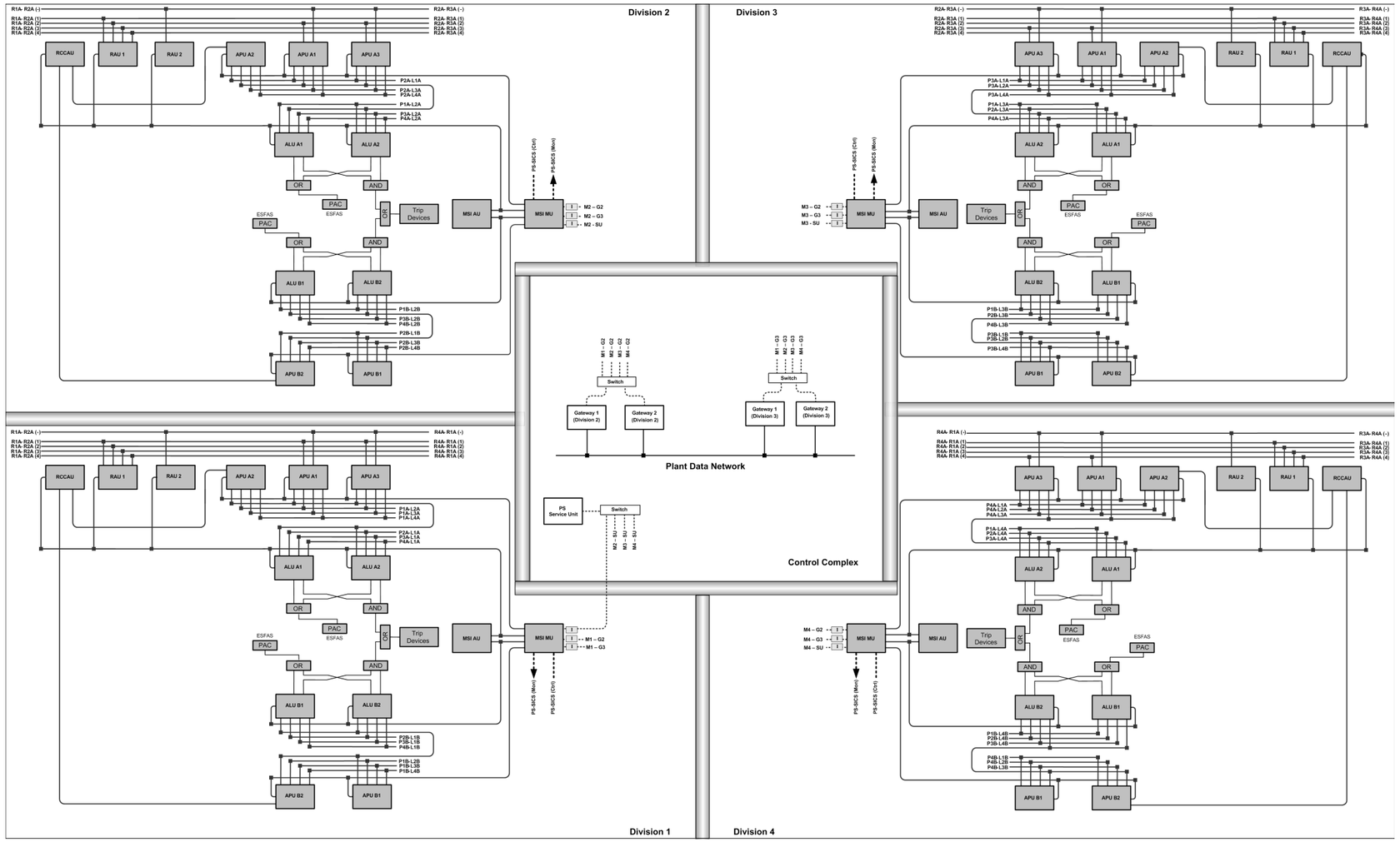

EPR3025 T2

Next File