Figure 6.3-1—Safety Injection System Overview

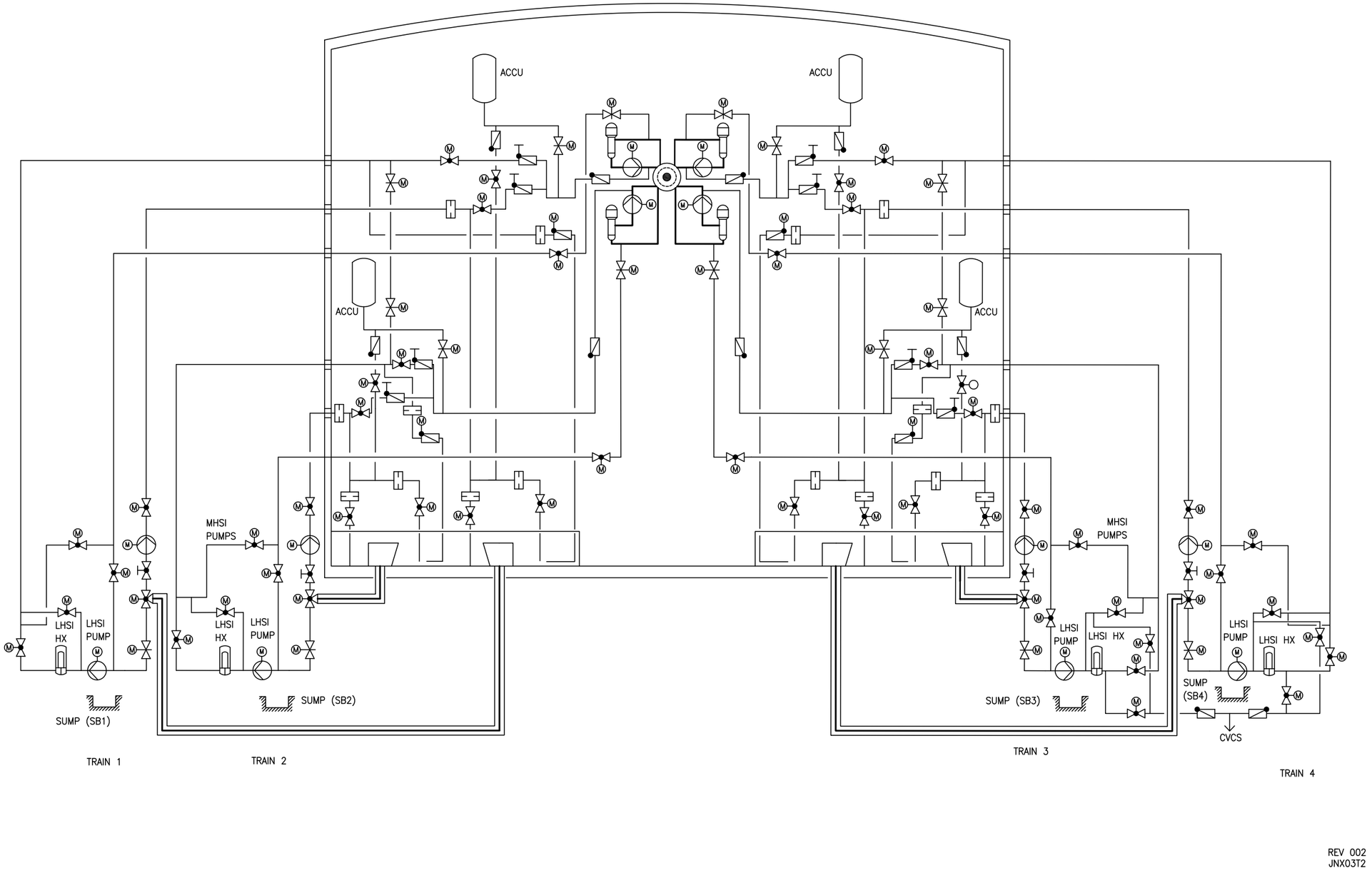

Figure 6.3-2—Safety Injection / Residual Heat Removal System Train (Typical) Sheet 1 of 2

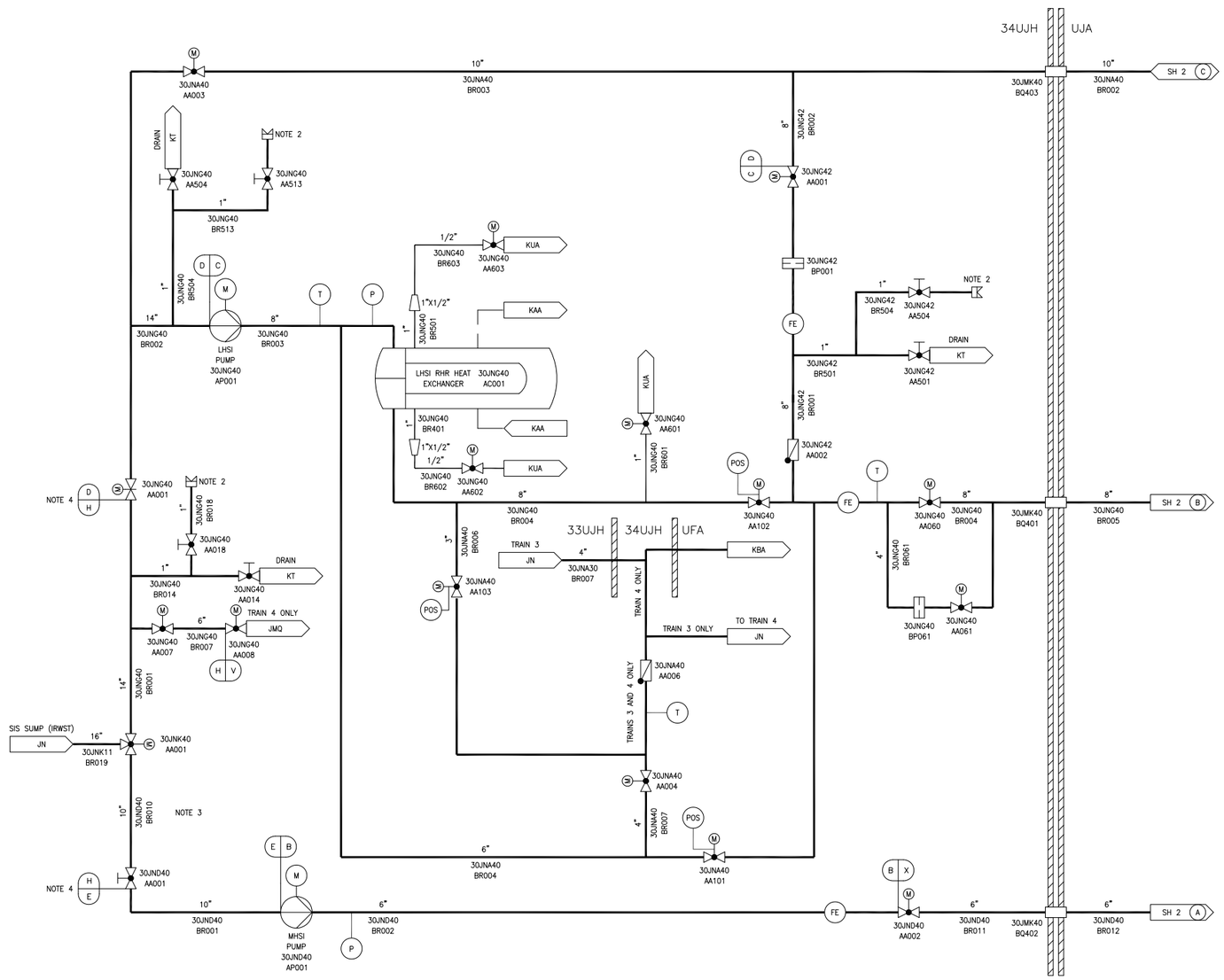

JMQ – SEVERE ACCIDENT HEAT REMOVAL SYSTEM
JN – SAFETY INJECTION AND RESIDUAL HEAT REMOVAL SYSTEM
JNA – RESIDUAL HEAT REMOVAL SYSTEM
JND – MEDIUM HEAD SAFETY INJECTION SYSTEM
JNG – LOW HEAD SAFETY INJECTION SYSTEM
JNK – IN-CONTAINMENT REFUELING WATER STORAGE TANK SYSTEM
KAA – COMPONENT COOLING WATER SYSTEM SUPPLY TRAIN
KBA – VOLUME CONTROL SYSTEM
KT – NUCLEAR ISLAND DRAIN AND VENT SYSTEM
KUA – NUCLEAR SAMPLING SYSTEM– ACTIVE LIQUID SAMPLES

UJA – REACTOR BUILDING
33UJH – SAFEGUARD BUILDING MECHANICAL, DIVISION 3
34UJH – SAFEGUARD BUILDING MECHANICAL, DIVISION 4
UFA – FUEL BUILDING

NOTES:
1. TRAIN 4 SHOWN: REPRESENTATIVE OF TRAINS 1, 2 AND 3 WITH EXCEPTIONS AS NOTED.
2. CONNECTION FOR CONTAINMENT ISOLATION LEAK TIGHTNESS TEST.
3. 30JND40 BR010 APPLIES TO TRAIN 4 ONLY. FOR TRAINS 1, 2 AND 3, 30JND10/20/30 BR001 EXTENDS TO THE 3-WAY VALVE.
4. DESIGN AREA H ENDS AT THE INLET TO THE 3-WAY VALVE AND CONTINUES AS DESIGN AREA E FOR TRAINS 1, 2 AND 3.

DESIGN AREA	SSC QUALITY GROUP	DESIGN PRESSURE PSIG	DESIGN TEMPERATURE °F	SSC SEISMIC CLASS
X	B	1525	340	I
V	B	175	320	I
H	B	75	320	I
E	B	75	250	I
D	B	930	360	I
C	B	1160	360	I
B	B	1525	250	I

REV 002
JNX01T2

Figure 6.3-2—Safety Injection / Residual Heat Removal System Train (Typical) Sheet 2 of 2

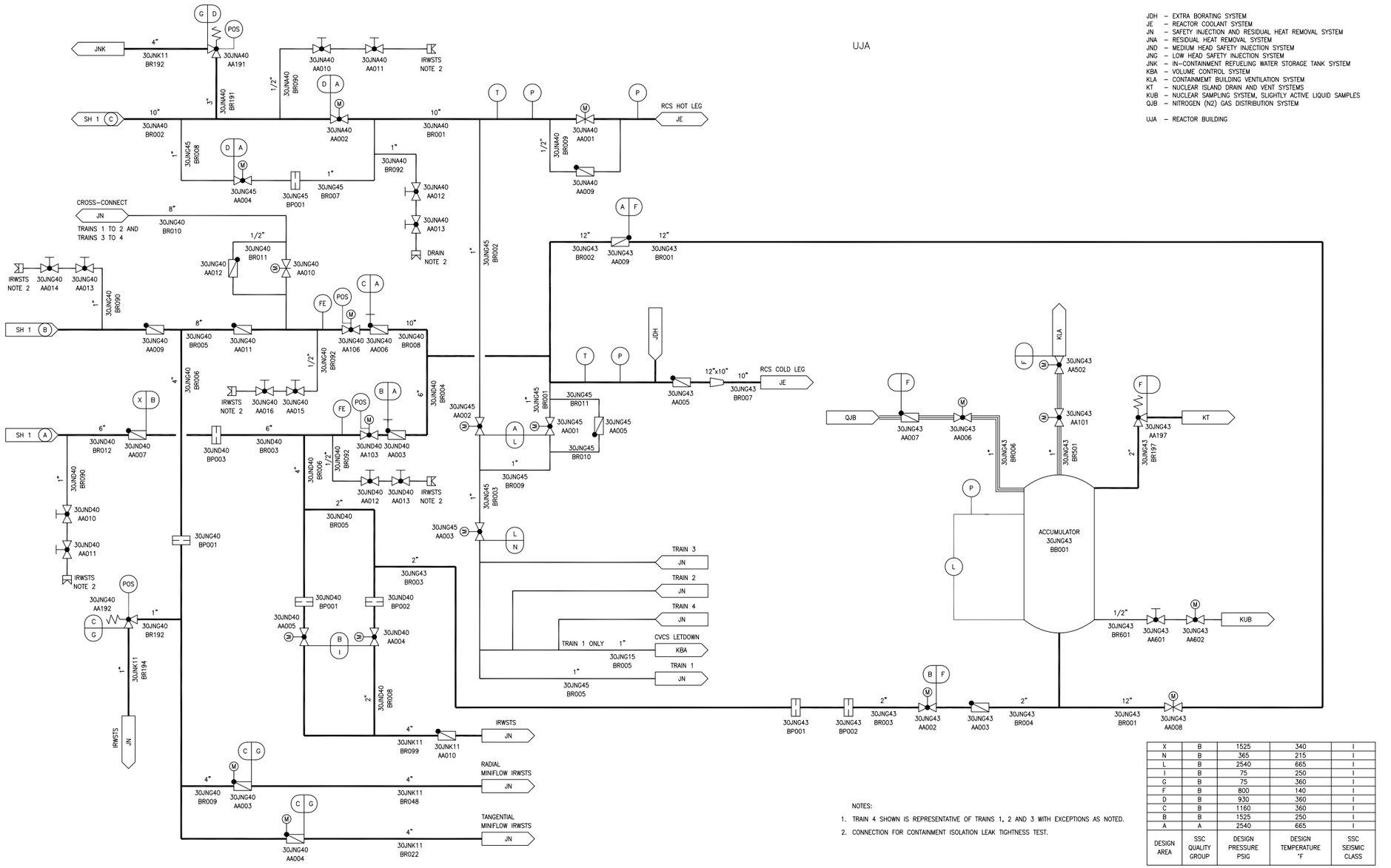

DESIGN AREA	SSC QUALITY GROUP	DESIGN PRESSURE PSIG	DESIGN TEMPERATURE °F	SSC SEISMIC CLASS
X	B	1525	340	I
N	B	365	215	I
L	B	2540	665	I
I	B	75	250	I
G	B	75	360	I
F	B	800	140	I
D	B	930	360	I
C	B	1160	360	I
B	B	1525	250	I
A	A	2540	665	I

Figure 6.3-3—IRWST Layout

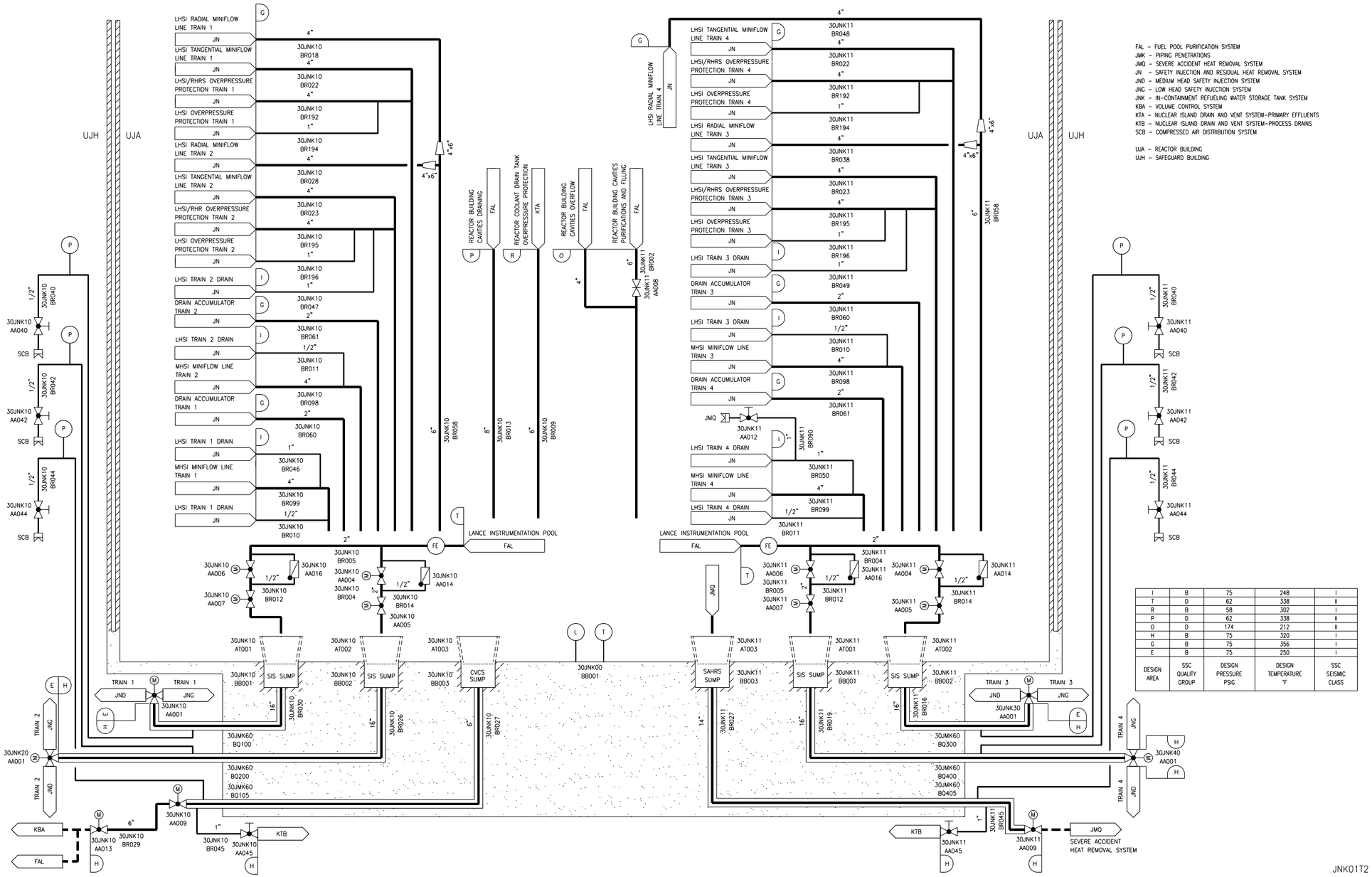

Next File