3.9.5 Reactor Pressure Vessel Internals

The following GDC apply to this section:

- GDC 1 and 10 CFR 50.55a require that structures, systems, and components (SSC) important to safety be designed to quality standards commensurate with the importance of the safety functions performed. The quality group classification of the reactor pressure vessel (RPV) internals is provided in Section 3.2.2.

- GDC 2 requires that SSC important to safety be designed to withstand the effects of earthquakes without loss of capability to perform their safety functions. The seismic classification of the RPV internals is provided in Section 3.2.2.

- GDC 4 requires that SSC important to safety be designed to accommodate the effects of, and be compatible with, environmental conditions of normal operation, maintenance, testing, and postulated accidents, including loss-of-coolant accidents (LOCAs). The safety-related RPV internals are designed so that the effects of environmental conditions to which they are exposed over their installed life will not diminish the likelihood of their performance under operating conditions, including accidents. The safety-related RPV internals are appropriately protected against dynamic effects, which include the effects of missiles, pipe-whipping, and discharging fluids that may result from equipment failures and from events and conditions outside the nuclear power unit. Additionally, the U.S. EPR design applies the leak-before-break (LBB) methodology, as described in Section 3.6.3, to eliminate the dynamic effects of pipe rupture.

- GDC 10 requires that the reactor core and its coolant, control, and protection systems be designed with appropriate margin to assure that specified, acceptable fuel design limits are not exceeded during any condition of normal operation, including the effects of anticipated operational occurrences. As noted in Section 3.1.2, the reactor core and associated coolant, control, and protection systems are designed to meet the requirements of GDC 10.

Other sections that interface with this section are listed below:

- A description of the control rod drive system is in Section 3.9.4.

- Information on threaded fasteners is in Section 3.13.

- A description of the fuel system design is in Section 4.2.

- A description of the nuclear design (including the RPV internals) is in Section 4.3.

- A description of the material aspects of the RPV internals is in Section 4.5.2.

- A description of the RPV is in Section 5.3.

3.9.5.1 Design Arrangements

The RPV internals consist of two primary sections: the upper internals and the lower internals. Figure 3.9.5-1—Reactor Pressure Vessel General Arrangement, shows a diagram of the RPV internals and the interface components that connect the internals to the RPV. Further information on the RPV internals is provided below.

3.9.5.1.1 Flow Path

Reactor coolant from the cold legs enters the RPV through the inlet nozzles and flows into the downcomer, which is the annulus formed by the space between the core barrel and the RPV inner wall. The flow then enters the lower plenum, which is the area at the bottom of the RPV below the flow distribution device (FDD) which is itself attached to the lower support plate (LSP). The flow then enters the FDD and is directed through the LSP and into the core region. After leaving the core, the heated reactor coolant passes through the upper core plate (UCP) and enters the upper plenum, which is enclosed by the UCP, core barrel and upper support plate (USP). The flow then passes through and around the columns attaching the UCP and USP to reach the RPV outlet nozzles.

A part of the main coolant flow through the RPV does not cool the fuel rods and is considered “core bypass” flow. The total core bypass flow can be divided into the following flows.

Bypass Flow for RPV Upper Dome

This bypass flow cools the RPV upper dome, which is the area above the USP. The flow is initiated by the RPV dome spray nozzles installed on the circumference of the core barrel and USP flanges. The spray nozzles direct flow from the downcomer annulus to the upper dome. The flow is then directed from the upper dome to the upper plenum via control rod guide tubes and other orifices in the upper support plate (e.g., aeroball tubes and instrument lances).

Bypass Flow for Heavy Reflector

This flow cools the heavy reflector slabs. This bypass flow is directed through cooling channels located in the slabs, the gap between the core and the slabs, and the gap between the core barrel and the slabs.

Bypass Flow Through Core Guide Thimbles

This flow cools the components inside the instrumentation and absorber rods guide thimbles.

Bypass Flow from RCS Inlet to Outlet Loop Nozzles

This flow is from the downcomer annulus through the gap between the core barrel outlet nozzles and the RPV outlet nozzles. This flow serves no function and is minimized by customizing the core barrel outlet nozzle external radius and the corresponding RPV outlet nozzle internal radius in order to control the radial gap.

3.9.5.1.2 Lower Internals

The lower internals are shown in Figure 3.9.5-2—Lower Reactor Internals. The primary functions of the lower internals are:

- Support, locate, restrain, protect, and guide the core components.
- Direct and distribute coolant flow through the core.
- Permit core loading, unloading, and reloading.
- Support the irradiation specimen baskets.
- Support the heavy reflector.
- Support the flow distribution device.

The lower internals consist of the:

- Core barrel flange.
- Core barrel cylinder.
- Irradiation specimen baskets.
- Lower support plate.
- Radial key inserts.
- Flow distribution device.
- Heavy reflector.

Further information on these components is provided below.

3.9.5.1.2.1 Core Barrel Flange

The core barrel flange is welded to the core barrel upper shell. The core barrel flange rests on a ledge machined in the RPV flange and transmits core and lower internal loads to the RPV. The core barrel outer diameter is customized to the corresponding RPV dimension in order to control the radial gap between the flanges. The radial gap controls lateral displacements in normal and faulted conditions.

3.9.5.1.2.2 Core Barrel Cylinder

The core barrel cylinder is composed of two cylindrical shells welded together. The upper section of the barrel has four integrated outlet nozzles located opposite the RPV outlet nozzles. The core barrel cylinder provides the passageway for the reactor coolant from the core to the RPV outlet nozzles. The core barrel outlet nozzle external radius is customized to the corresponding RPV nozzle radius in order to control the radial gap. The radial gap restricts the bypass flow between the RPV inlet and outlet nozzles.

3.9.5.1.2.3 Irradiation Specimen Baskets

Irradiation specimen baskets are attached to the outside of the core barrel lower shell at locations where the neutron flux is higher. The irradiation specimen baskets support, hold, protect, and guide the irradiation specimen capsules and also provide specimen capsule cooling.

3.9.5.1.2.4 Lower Support Plate

The LSP is welded to the core barrel lower shell. The top face supports and restrains the fuel assemblies and the heavy reflector. The top face is equipped with lower fuel alignment pins at each fuel assembly location that position, align, and restrain the fuel assemblies. The top face also contains heavy reflector positioning blocks that provide the proper gap between the heavy reflector and the core barrel. The bottom face of the LSP supports the flow distribution device. The LSP has inlet holes under each fuel assembly location which have an orifice at their base to equalize the flow rates at the fuel assembly inlets.

3.9.5.1.2.5 Radial Key Inserts

The lower internals are centered within the RPV by radial keys and grooves machined in the LSP. The radial keys are welded to and integral with the RPV. The radial keys limit lateral movement of the core barrel via controlled lateral gaps between the radial keys and the LSP. Some of the radial keys and corresponding LSP grooves also limit rotation of the core barrel via controlled circumferential gaps. These radial keys and the LSP grooves have radial key inserts installed to maintain controlled lateral, circumferential, and vertical clearances. The radial key inserts are plates that are pinned and bolted to the radial keys and the LSP grooves.

The radial keys also provide a secondary support function by limiting the consequences of a postulated failure of the core barrel, which would cause the core barrel to drop. This postulated failure is a Beyond-Design-Basis event. The energy that would be absorbed by the radial keys is limited by the controlled vertical gaps between the radial keys and the LSP.

3.9.5.1.2.6 Flow Distribution Device

The flow distribution device is located below, and attached to, the LSP. The flow distribution device is composed of a distribution plate and support columns. The flow distribution device provides a homogeneous flow distribution between the LSP holes.

3.9.5.1.2.7 Heavy Reflector

The heavy reflector is located inside the core barrel between the core and core barrel shells. The heavy reflector increases neutron efficiency due to its neutron reflective properties, protects the RPV from radiation-induced embrittlement, improves the long-term mechanical behavior of the lower internals, and provides lateral support to maintain the geometry of the core. To avoid any welded or bolted connections close to the core, the heavy reflector consists of stacked slabs positioned one above the other (see Figure 3.9.5-3—Reactor Pressure Vessel Heavy Reflector). The heavy reflector rests on the LSP, but does not contact the UCP. The internal contour of the slabs conforms to the core, while the external contour is cylindrical. The top slab is fitted with alignment pins that extend through the UCP to provide proper alignment. Vertical keys are installed into keyways machined into the external contour of the slabs to provide additional lateral and vertical restraint. The reentrant corners of the keyways within the slabs are provided with a small radius.

Since the heavy reflector is located between the core and the core barrel, it limits the core bypass flow at the core periphery. It also provides lateral support to the core and contributes to the decrease of neutron fluence on the RPV inner wall.

Additional information on the heavy reflector is provided in Section 4.3.

3.9.5.1.3 Upper Internals

The upper internals are shown in Figure 3.9.5-4—Reactor Pressure Vessel Upper Internals, and are described in further detail below. The primary functions of the upper internals are:

- Support, locate, restrain, protect, and guide the core components.
- Direct the coolant flow from the core outlet to the RPV outlet nozzles.
- Permit core loading, unloading, and reloading.
- Support, align, and protect the rod cluster control assemblies (RCCAs).
- Guide, support, and protect the incore instrumentation.

The upper internals consist of the:

- Upper support assembly (including the flange, shell, and USP).

- Upper core plate.
- Control rod guide assemblies (CRGAs).
- Columns.

3.9.5.1.3.1 Upper Support Assembly

The upper support assembly is a circular skirt with an integrated flange that is welded to the USP. The upper support assembly flange is part of the internals hold-down stack in the RPV. The upper support assembly flange rests on the hold-down spring, which rests on the core barrel flange, which in turn is supported on the ledge machined in the RPV flange. The upper support assembly flange is held in place and preloaded by the RPV closure head flange. Its outer diameter is customized to the corresponding vessel dimension in order to control the radial gap between the flanges. The radial gap controls lateral displacements in normal and faulted conditions.

3.9.5.1.3.2 Upper Core Plate

The UCP encloses the top of the core cavity and is attached to the USP via columns. It contains holes located opposite the fuel assemblies for core coolant outlet flow which are designed to equilibrate the outlet flow from the core. The UCP contains fuel alignment pins at each fuel assembly location that position, align, and restrain the fuel assemblies.

3.9.5.1.3.3 Control Rod Guide Assemblies

The CRGAs consist of guide tubes held together with support plates and tie rods. The guide tube assemblies provide a straight, low-friction channel to insert, withdraw, and drop the control rod drive mechanism (CRDM) drive shafts and the attached RCCAs. The guide tube assemblies are located inside housings and columns (see Section 3.9.5.1.3.4 below). The housings are attached to the top of the USP and the columns are attached to the bottom of the USP and also to the UCP. The housings and columns also protect the RCCAs from static and dynamic hydraulic loads and other mechanical loads.

3.9.5.1.3.4 Columns

The columns attach the USP to the UCP and transmit the vertical forces to the RPV closure head. The following is a description of the types of columns bolted to the bottom of the USP.

- The CRGA columns serve as housings for the control rod guide assemblies. They are located above those fuel assemblies that are equipped with RCCAs. They also serve to support the instrument guide tubes for the incore instrumentation lances where they penetrate the upper plenum.

- The level monitoring probe (LMP) columns are located around the edge of the USP and protect the LMPs in the upper plenum.
- The normal columns provide support at the USP edge, including when the upper internals are on the refueling cavity storage stand.

3.9.5.1.4 Interface Components

The interface components for the RPV internals are listed below:

- Hold-down spring.
- Handling inserts.
- Head and vessel alignment pins.
- Thermal sleeves.

3.9.5.1.4.1 Hold-Down Spring

The hold-down spring functions as a spring washer and is mounted between the flanges of the upper and lower internals. Its thickness is customized to the depth of the groove in the RPV flange and to the thickness of the internal flanges in order to obtain the required compression.

The hold-down spring maintains the contact between the core barrel flange and the RPV ledge and between the USP flange and the vessel head flange. The hold-down spring also provides a seal between the upper dome and the upper plenum.

3.9.5.1.4.2 Handling Inserts

The handling inserts are located in the USP flange and the core barrel flange. They facilitate the removal of the upper and lower internals for refueling and inspection.

3.9.5.1.4.3 Head and Vessel Alignment Pins

The head and vessel alignment pins are composed of upper and lower pins. The upper pins are attached to the upper support assembly flange and extend into the RPV closure head flange. The lower pins are attached to the core barrel flange and extend into the upper pins. They provide centering between the RPV closure head flange, core barrel flange, and the upper support assembly flange.

3.9.5.1.4.4 Thermal Sleeves

Thermal sleeves protect the CRDM adapters. The thermal sleeves are equipped with a funnel that guides the insertion of the drive rods into the RPV head adapter when the RPV closure head is lowered onto the RPV.

3.9.5.2 Loading Conditions

The design, analysis, fabrication, and non-destructive examination of the RPV internals, Class CS core support structures, is in accordance with the ASME Boiler and Pressure Vessel Code, Section III, Division 1, Subsection NG (Reference 1). The design documentation for these Class CS core support structures includes a certified design specification and a certified design report conforming to the provisions of Subsection NCA of Reference 1.

Those RPV internals components not designated as ASME Code, Section III, Class CS core support structures are designated as internal structures in accordance with ASME Code, Section III, Subsection NG-1122. The components designated as internal structures are designed such that they meet the guidelines of NG-3000 and are in accordance with ASME Code Section III, Subsection NG-1122(c). Table 3.9.5-1—Component Classification lists the core support structures (CS) and internal structures (IS) for the RPV internals.

Evaluations of rupture locations, rupture loads, and dynamic effects of postulated rupture of piping are provided in Section 3.6.2. Evaluation of the adequacy of analysis methods for Seismic Category I RPV internals is provided in Section 3.9.1. The plant and system operating conditions and design-basis events that provide the basis for the design of the RPV internals are addressed in Section 3.9.3. The preoperational vibration test program for the RPV internals is consistent with the guidelines of RG 1.20 and is addressed in Section 3.9.2.

A COL applicant that references the U.S. EPR design certification will provide a summary of reactor core support structure maximum total stress, deformation, and cumulative usage factor values for each component and each operating condition in conformance with ASME Section III Subsection NG.

3.9.5.3 Design Bases

Pursuant to GDC 10, the reactor internals are designed with appropriate margin to assure that specified acceptable fuel design limits are not exceeded during any condition of normal operation, including the effects of anticipated operational occurrences.

The combinations of design and service loadings accounted for in the design of the RPV internals, and the method of combining loads for normal, upset, emergency, and faulted service conditions, are addressed in Section 3.9.3. The allowable design or service limits to be applied to the RPV internals and the effects of service environments, deflection, cycling, and fatigue limits are addressed in Section 3.9.3.1.

Evaluation of the adequacy of dynamic analyses under steady-state and operational flow transient conditions, and the proposed program for pre-operational and startup

testing of flow-induced vibration and acoustic resonance for RPV internals, is addressed in Section 3.9.2. Evaluation of the adequacy of the structural integrity design of the RPV internals is provided in Section 3.9.3. Section 3.6.3 provides a description of the LBB methodology used to eliminate from the design basis the dynamic effects of the pipe ruptures postulated in Section 3.6.2.

3.9.5.3.1 Interface Cold Gaps

The design of the RPV internals involves interface cold gaps between the internals and the RPV and between the main parts of the internals. The types of cold gaps are defined below:

- Functional cold gaps that are relative to the alignments of the equipment and to the limitation of core bypass flows under normal and upset operating conditions.
- Controlled cold gaps that are implemented in order to improve the behavior under normal, faulted, and beyond-design conditions.

The cold gaps provide the following functions:

- Allow free withdrawal of the internals from the vessel in cold conditions.
- Avoid interference between components during temperature elevation transients (because the thermal inertia is higher for the vessel than for the internals).
- Limit the internals-to-vessel relative displacement during normal and faulted conditions.
- Allow for the required bypass flows.

Further information on the two types of cold gaps is provided below.

3.9.5.3.1.1 Functional Cold Gaps

The alignment components for the RPV internal parts contain functional cold gaps. The diameter on the core barrel outlet nozzle is customized to the corresponding RPV outlet nozzle diameter in order to reduce, as much as possible, the outlet nozzle gap, which reduces the bypass flow at full power conditions. The annulus between the heavy reflector and the core barrel allows a flow velocity that meets the cooling needs of the heavy reflector.

3.9.5.3.1.2 Controlled Cold Gaps

The controlled cold gaps for the RPV internals are described below:

- The diameters of the core barrel flange and the upper support assembly flange are customized to the RPV flange ledge in order to reduce the relative displacements between the top of the internals and the RPV.

- The heavy reflector bottom includes a lip that fits in a ledge machined in the LSP. The reduced radial gap between the ledge and the lip avoids sliding of the heavy reflector.

- The diameter of the UCP is customized to the corresponding core barrel shell inner diameter. This gap is also controlled in order to reduce possible lateral displacement.

- The radial key inserts are customized to the corresponding LSP grooves to maintain controlled lateral, circumferential, and vertical clearances. Additional information on the radial keys is provided in Section 3.9.5.1.2.5.

3.9.5.3.2 Displacement Limits

The displacement limit for functionality of the CRGA is a maximum of 0,787 inches of the UCP displacement relative to the USP. This displacement limit is based on full scale CRGA loss of function testing.

3.9.5.4 BWR Reactor Pressure Vessel Internal Including Steam Dryer

This section does not apply to the U.S. EPR.

3.9.5.5 References

1. ASME Boiler and Pressure Vessel Code, Section III, “Rules for Construction of Nuclear Power Plant Components,” The American Society of Mechanical Engineers, 2004.

Table 3.9.5-1—Component Classification
Sheet 1 of 2

Component	Classification[1]
Lower Internals	
Core barrel (flange and shells)	CS
Lower support plate	CS
Fuel assembly guide pin	CS
Radial key inserts	CS
Irradiation capsule basket	IS
Irradiation capsule access plug	IS
RPV dome spray nozzles	IS
Flow distribution device	IS
Heavy Reflector	
Slabs	CS
Vertical keys	CS
Upper core plate guide pins	CS
Centering pins	CS
Normal and centering rings	CS
Tie rods	CS
Positioning keys	IS
Upper Internals	
Upper support plate (flange and shell)	CS
Upper core plate	CS
Upper fuel pins	CS
Normal support columns	CS
Control rod guide assembly columns	CS
Control rod guide assembly support pins	CS
Control rod guide assembly	IS
Level measurement probe columns	IS
Guide tubes for incore instrumentation	IS
Level measurement probe upper housing	IS

Table 3.9.5-1—Component Classification
Sheet 2 of 2

Component	Classification[1]
Interface Components	
Radial key inserts	CS
Hold-down spring	CS
Control rod drive mechanism adaptor thermal sleeves	IS
Handling studs and inserts	IS
Head and vessel alignment pins	IS

Notes:

1. CS – Core Support Structure
   IS – Internal Structure

Figure 3.9.5-1—Reactor Pressure Vessel General Arrangement

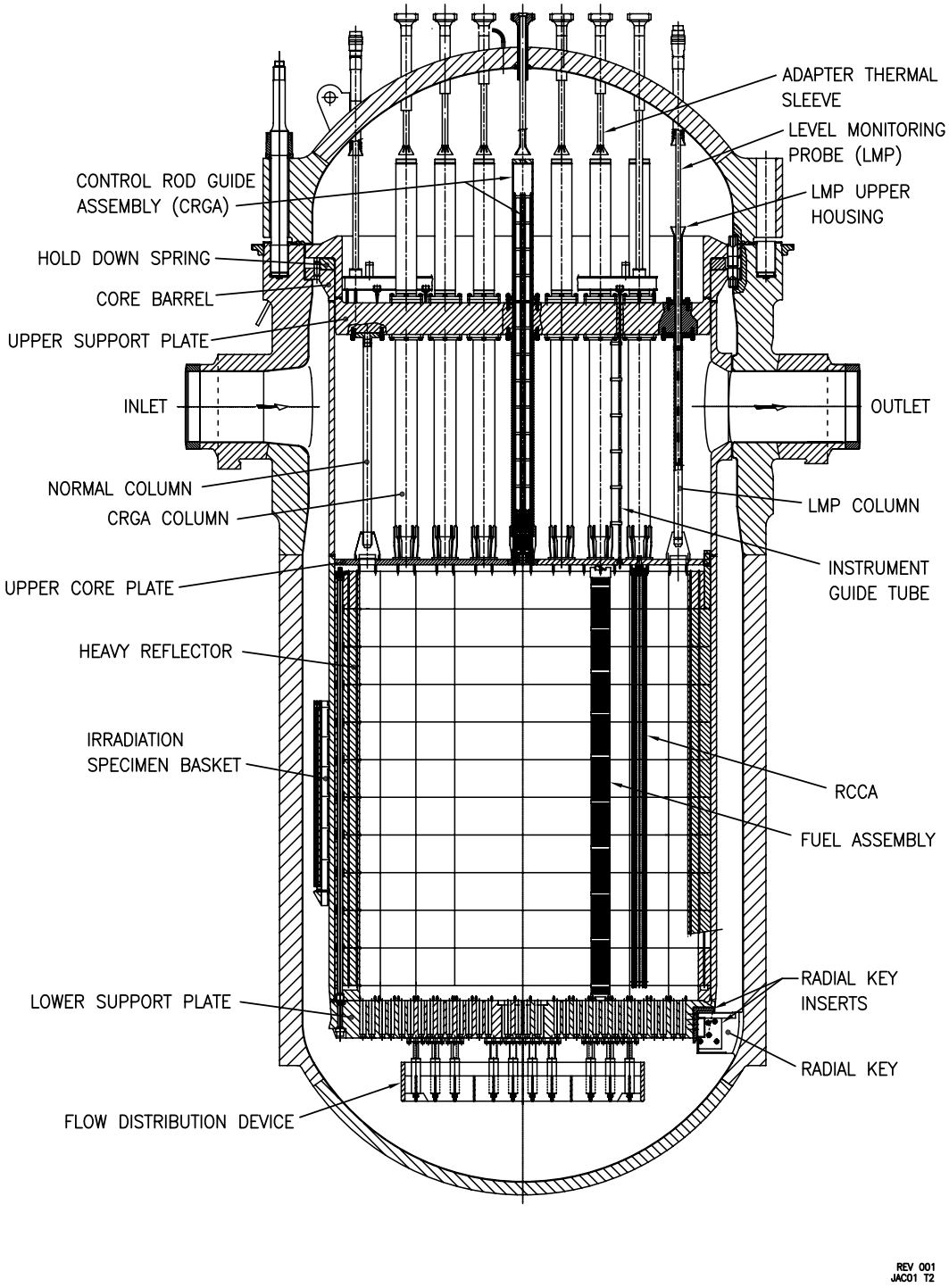

Figure 3.9.5-2—Lower Reactor Internals

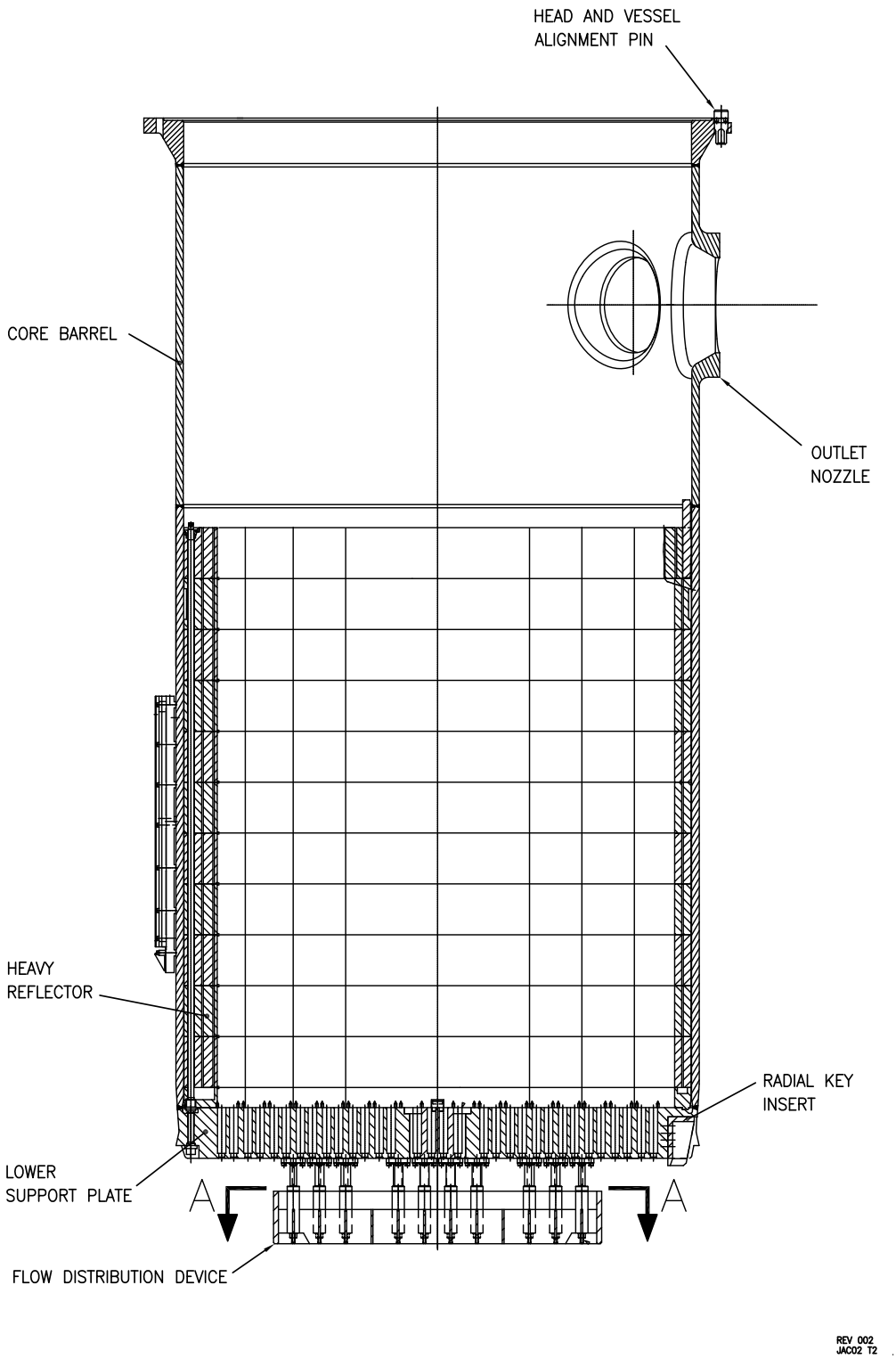

Figure 3.9.5-3—Reactor Pressure Vessel Heavy Reflector

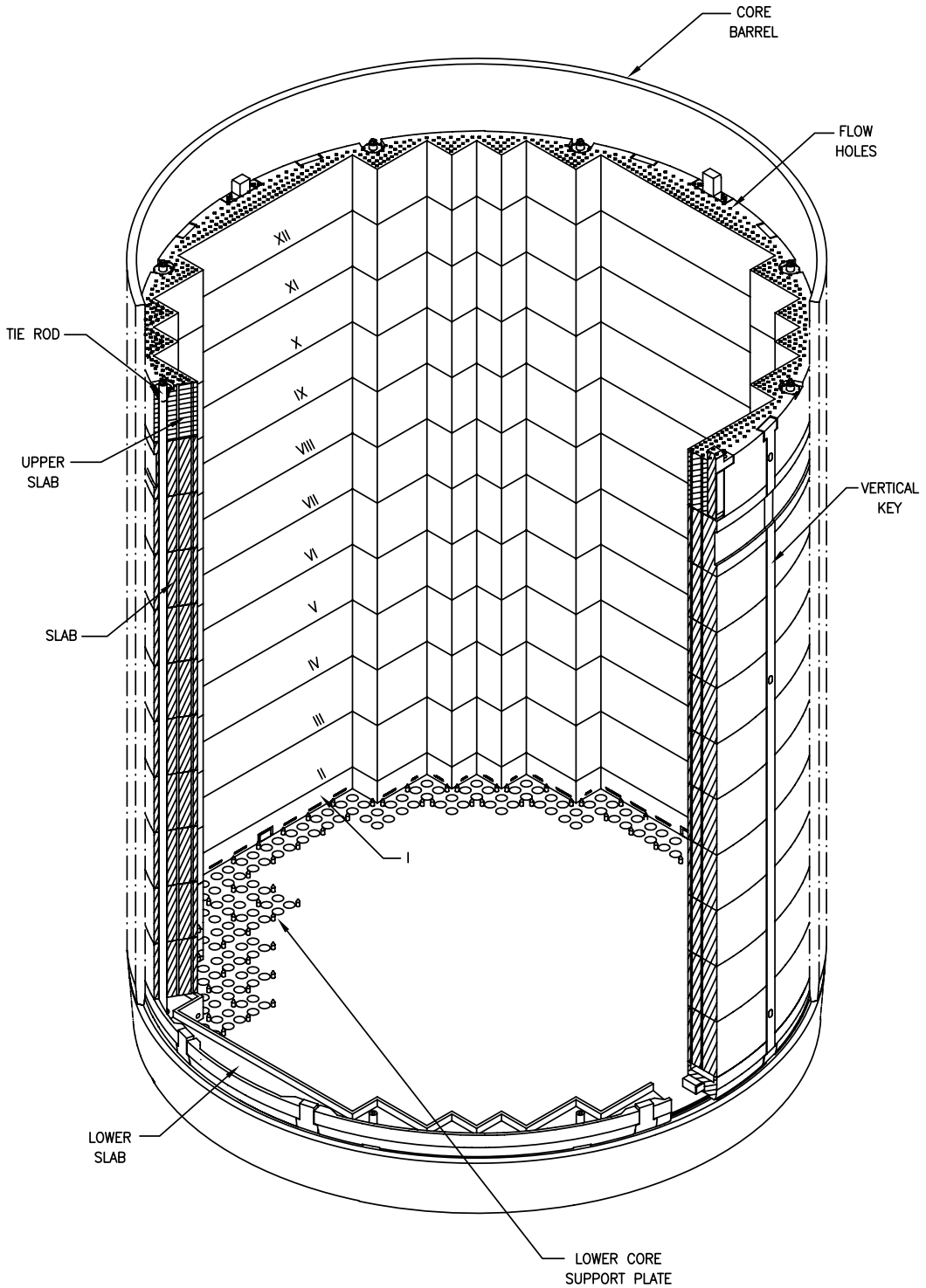

Figure 3.9.5-4—Reactor Pressure Vessel Upper Internals

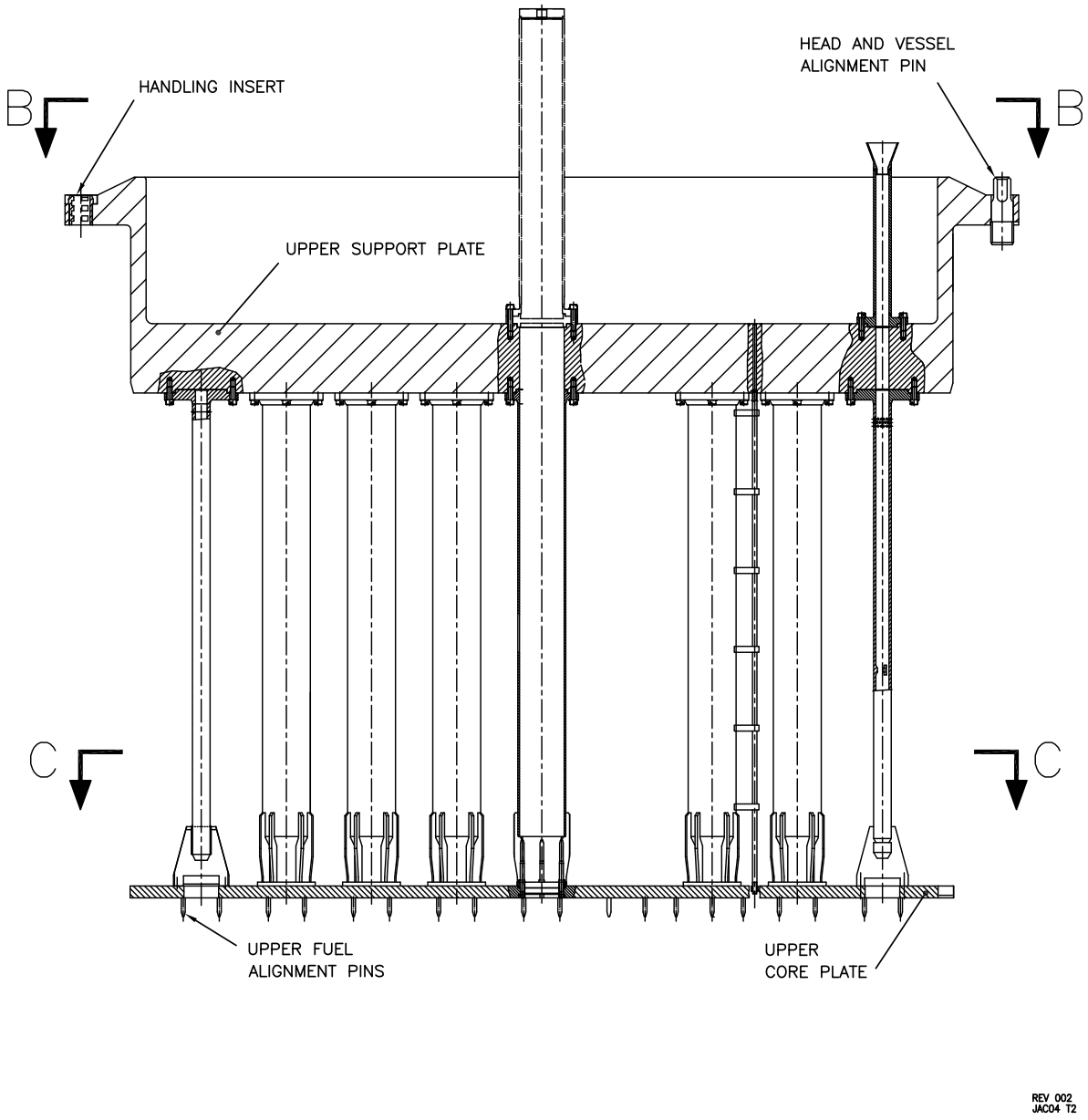

Figure 3.9.5-5—Section A-A Flow Distribution Device

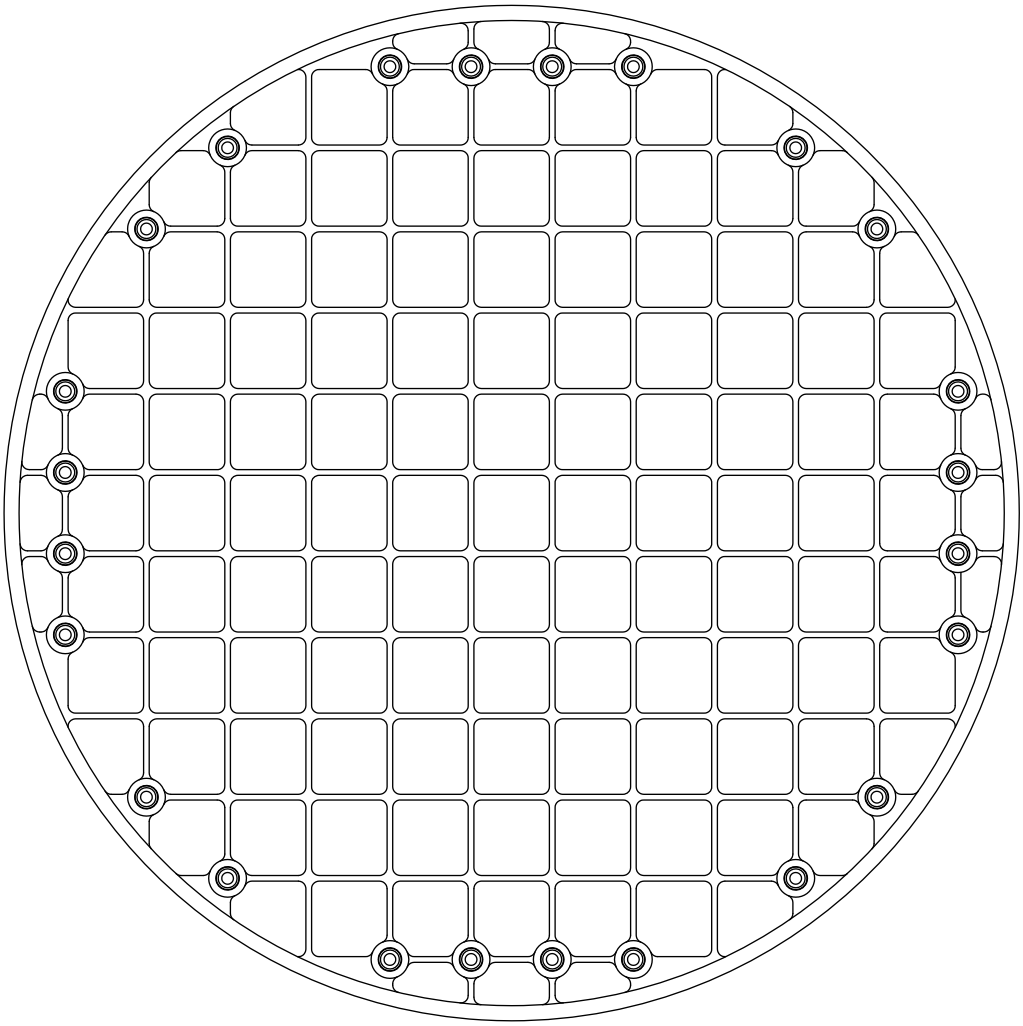

SECTION A–A
FLOW DISTRIBUTION DEVICE

JAC05 T2

Figure 3.9.5-6—Section B-B Upper Support Plate

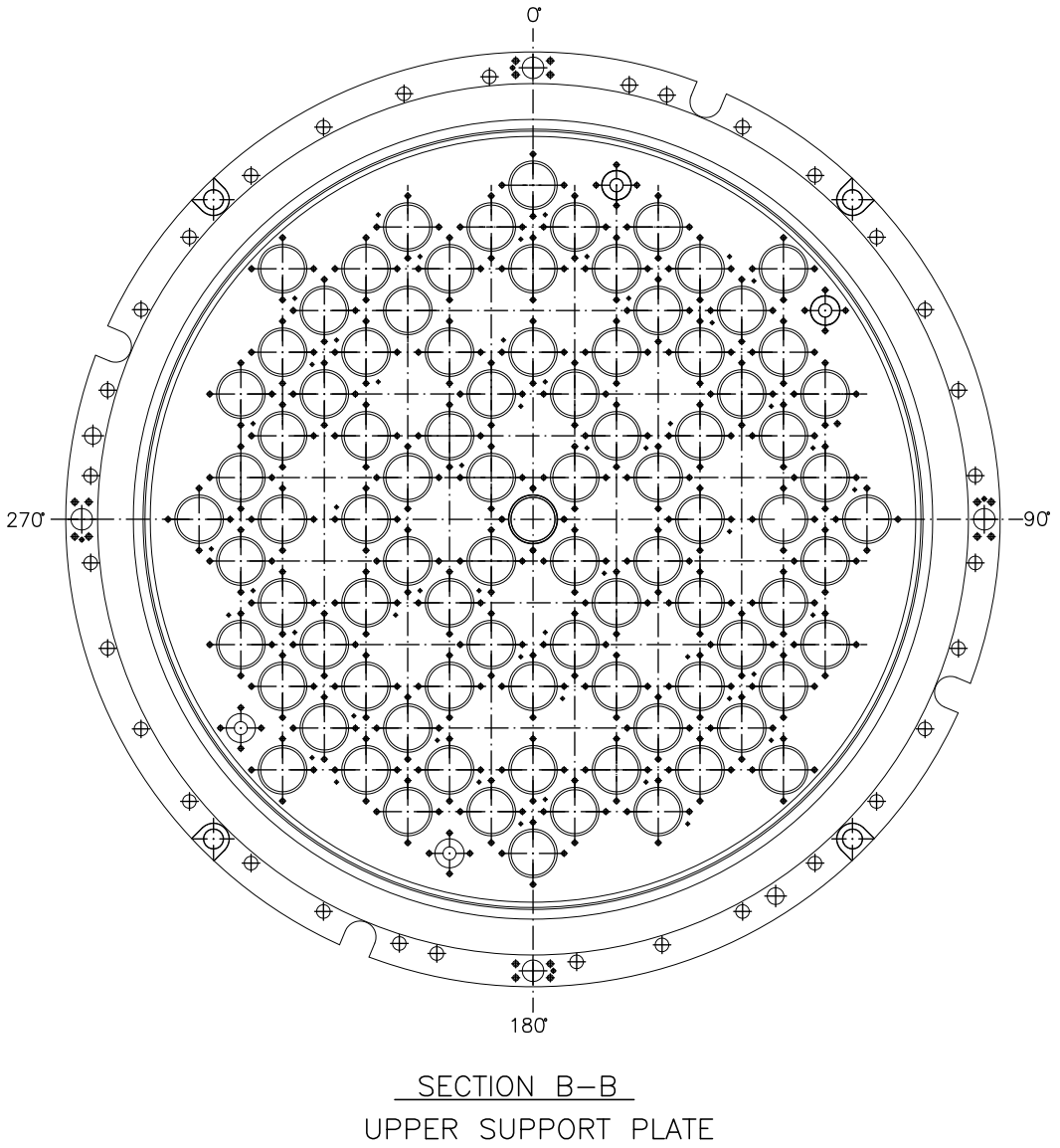

Figure 3.9.5-7—Section C-C Upper Core Plate

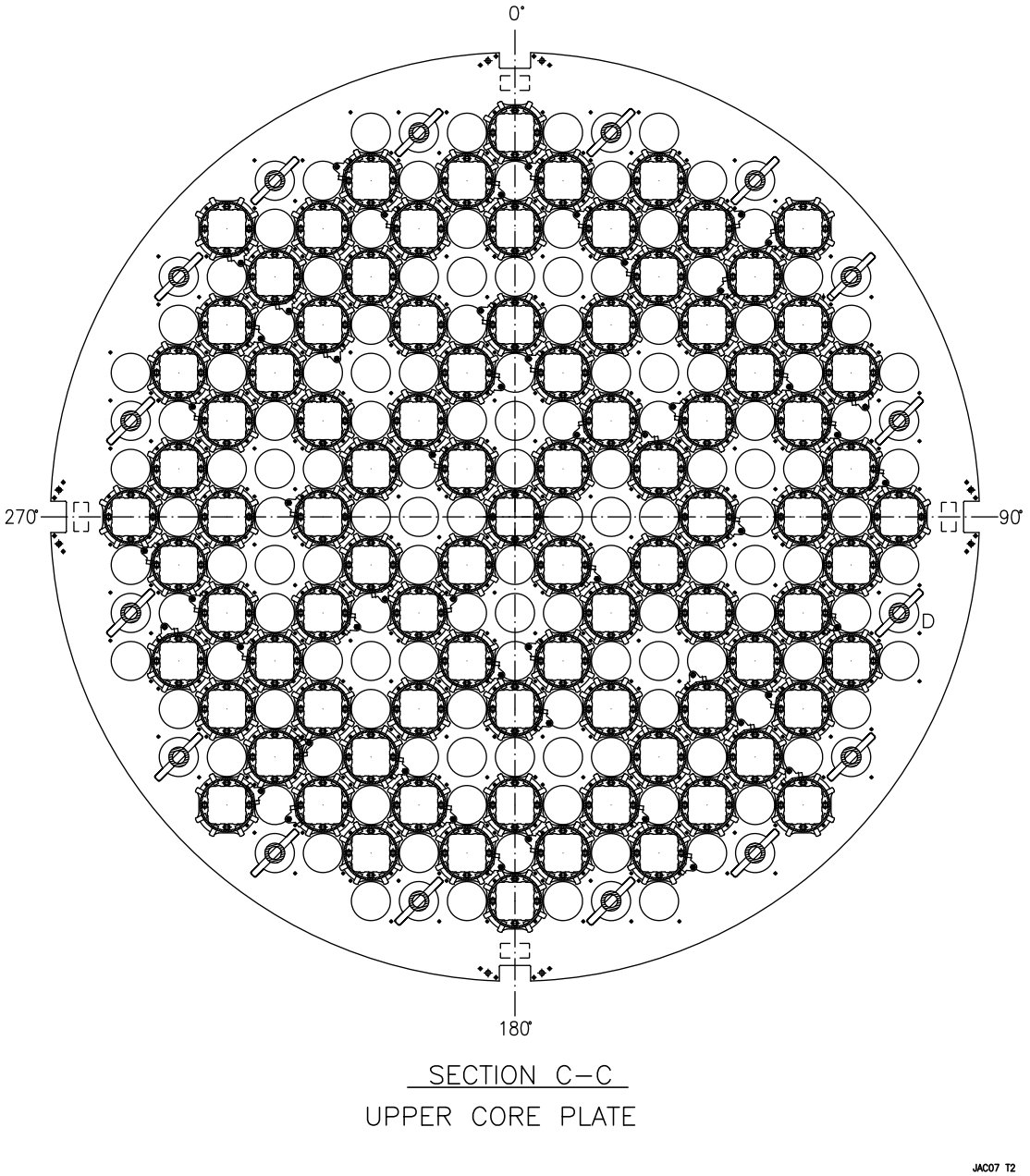

Next File