Figure 2.8.6-1—Main Feedwater System Functional Arrangement

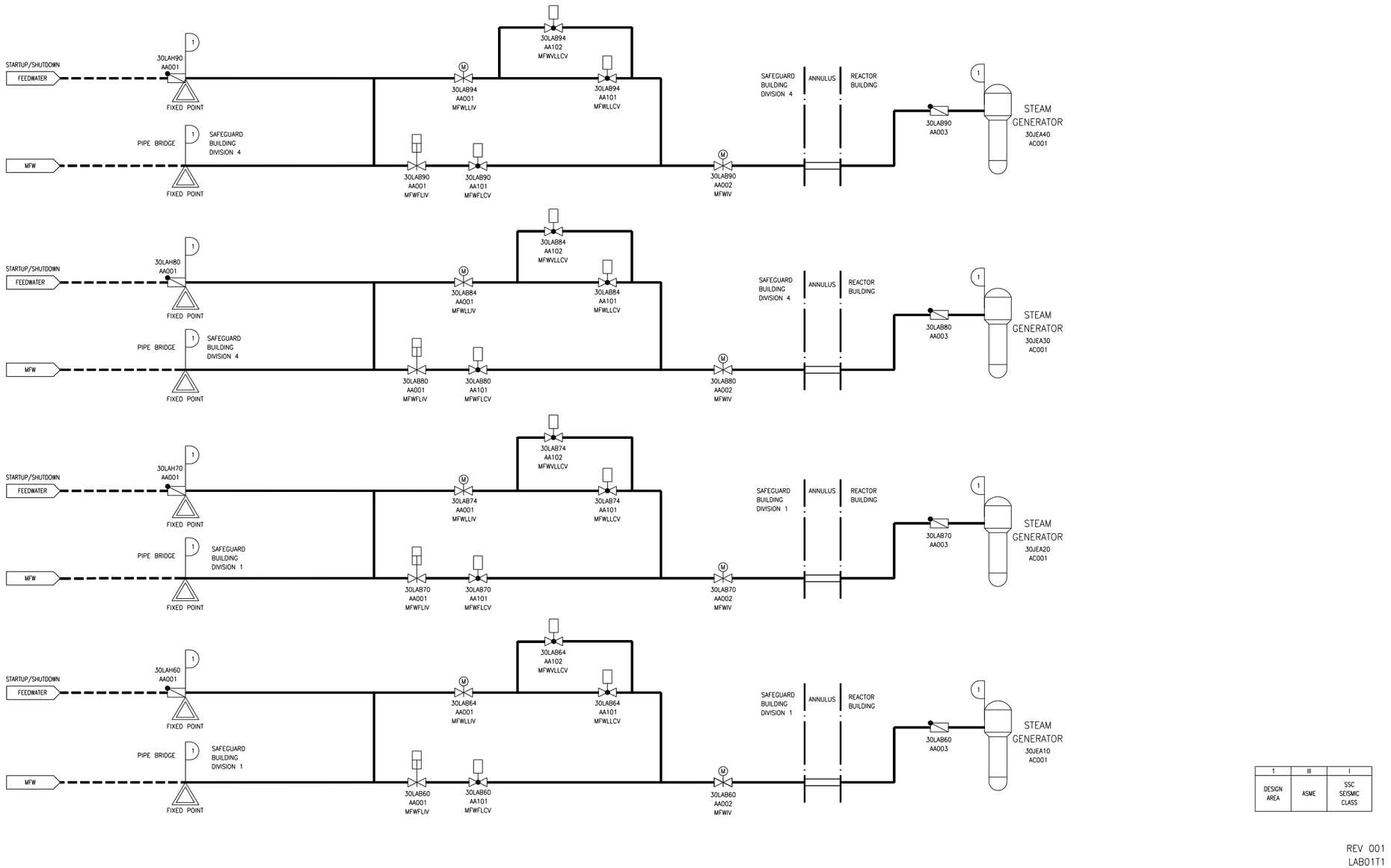

Next File