Figure 2.8.2-1—Main Steam Supply System Functional Arrangement
Sheet 1 of 2

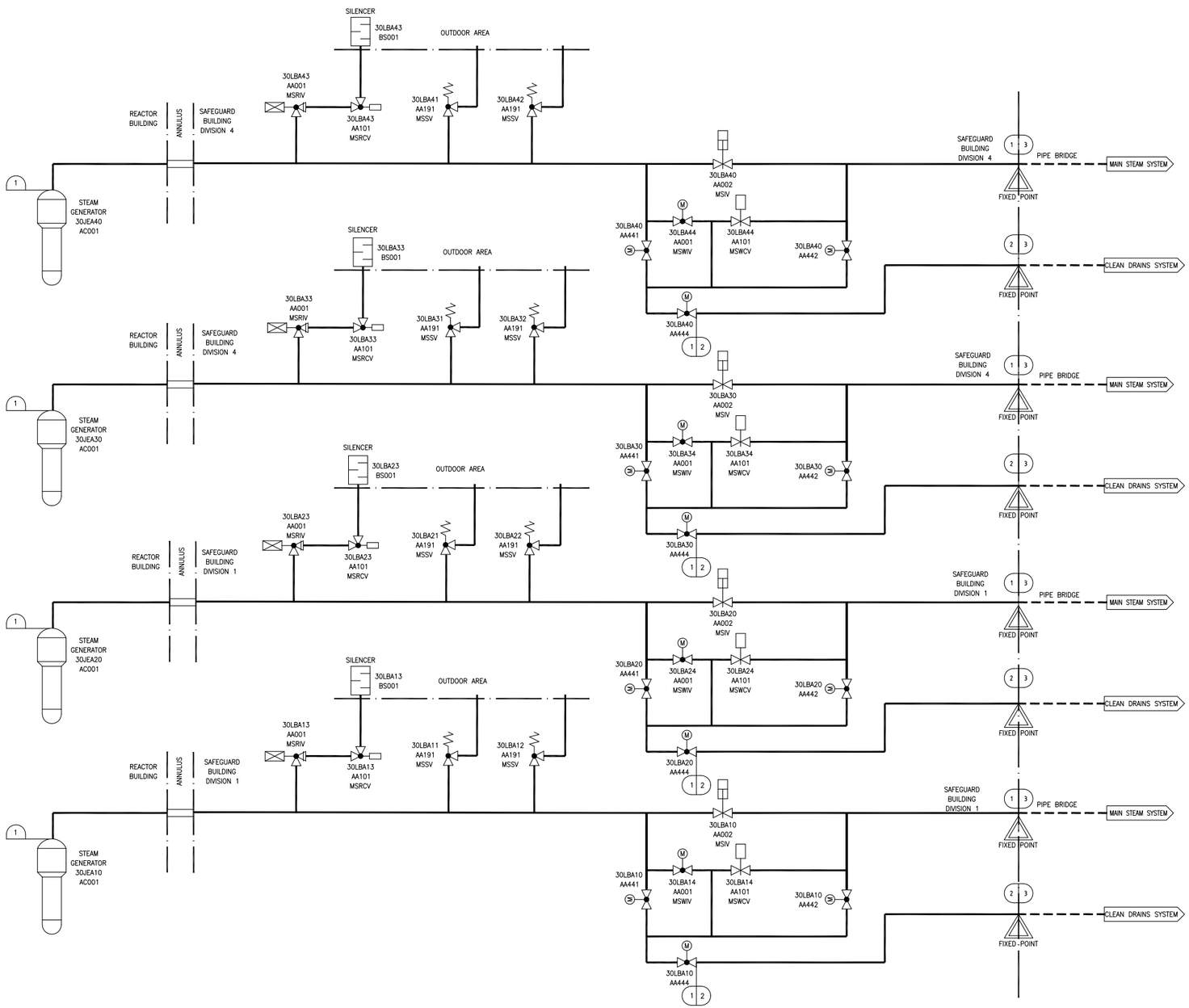

Figure 2.8.2-1—Main Steam Supply System Functional Arrangement
Sheet 2 of 2

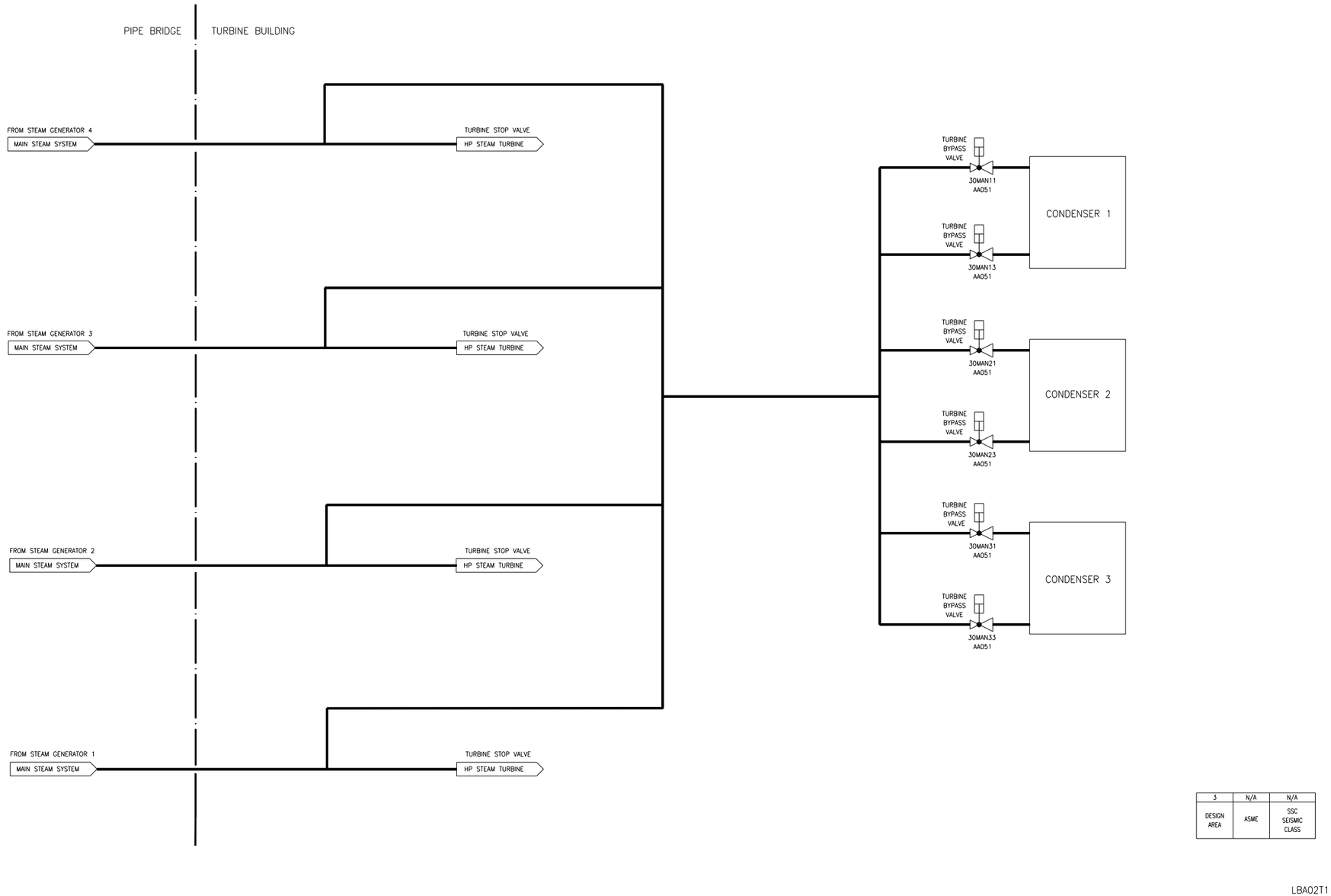

Next File