Figure 2.8.1-1—Turbine Generator System Basic Configuration

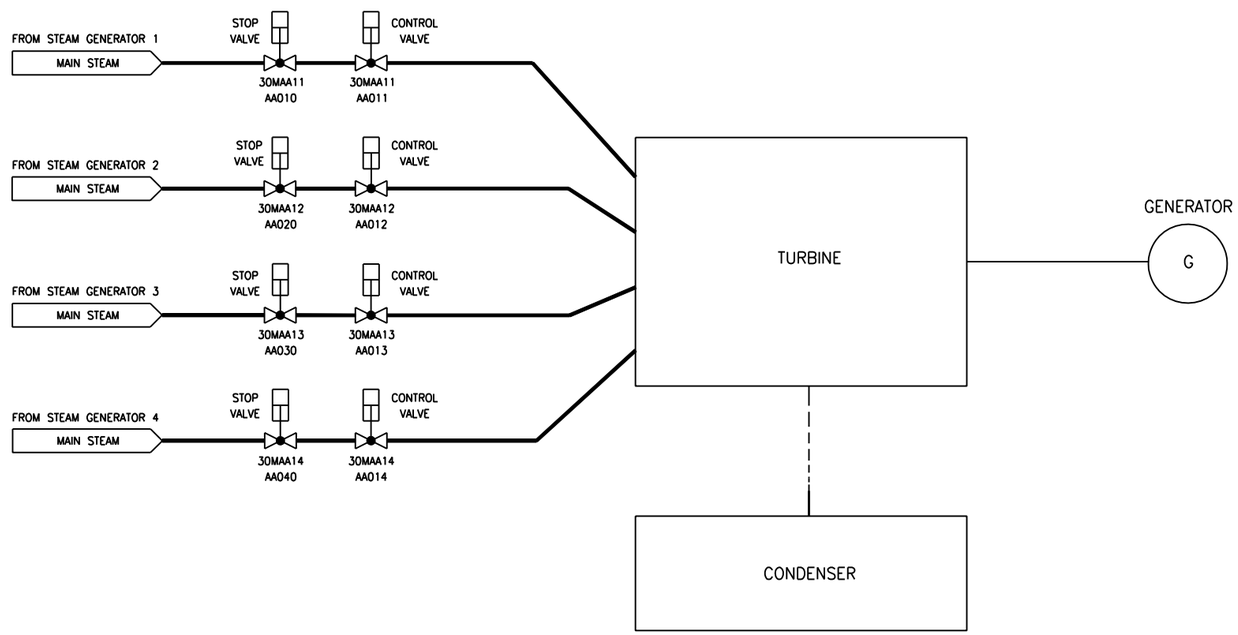

3	N/A	N/A
DESIGN AREA	ASME	SSC SEISMIC CLASS

MAA01T1

Next File