Figure 2.7.2-1—Safety Chilled Water System Functional Arrangement
Sheet 1 of 4

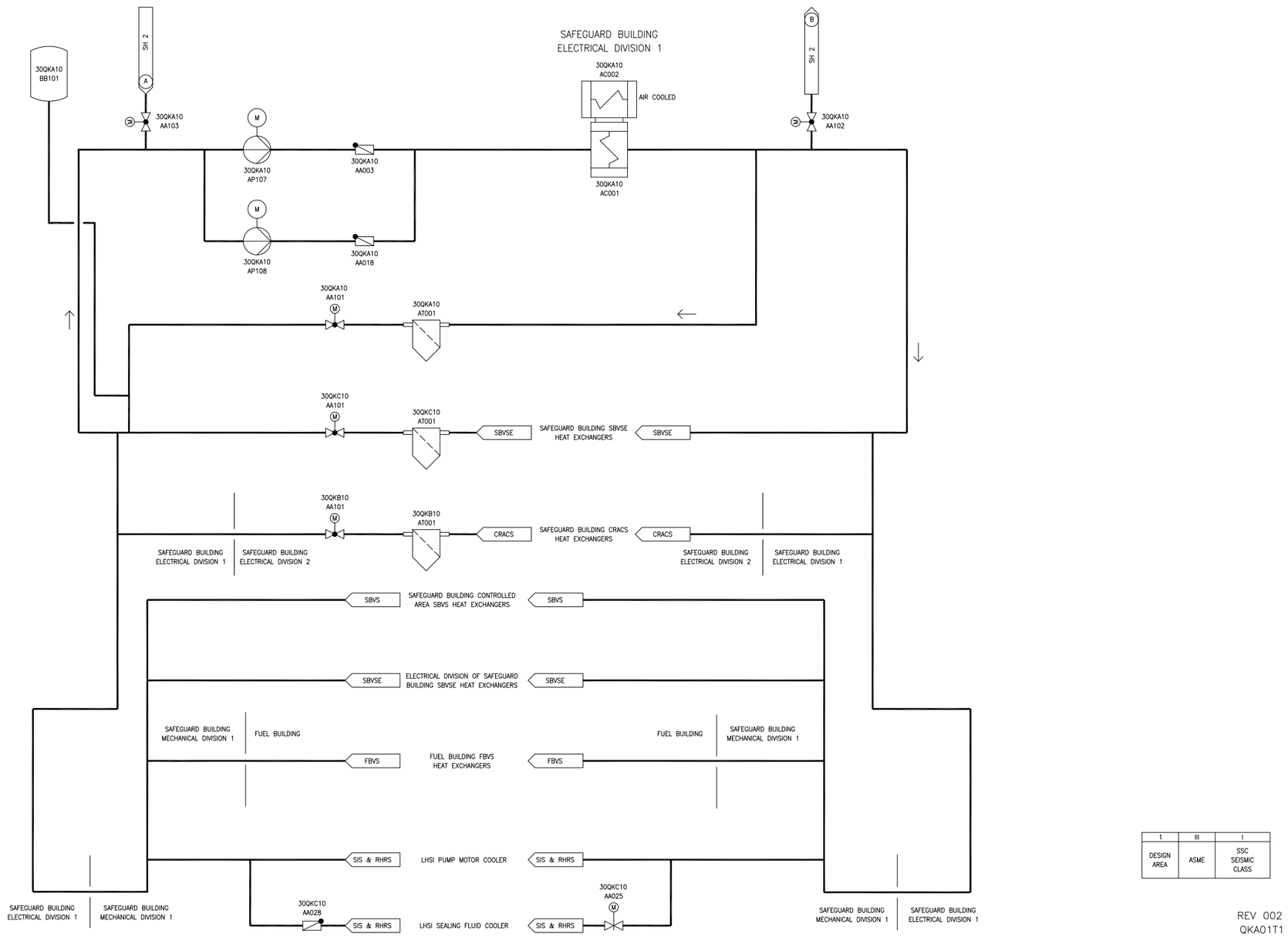

Figure 2.7.2-1—Safety Chilled Water System Functional Arrangement
Sheet 2 of 4

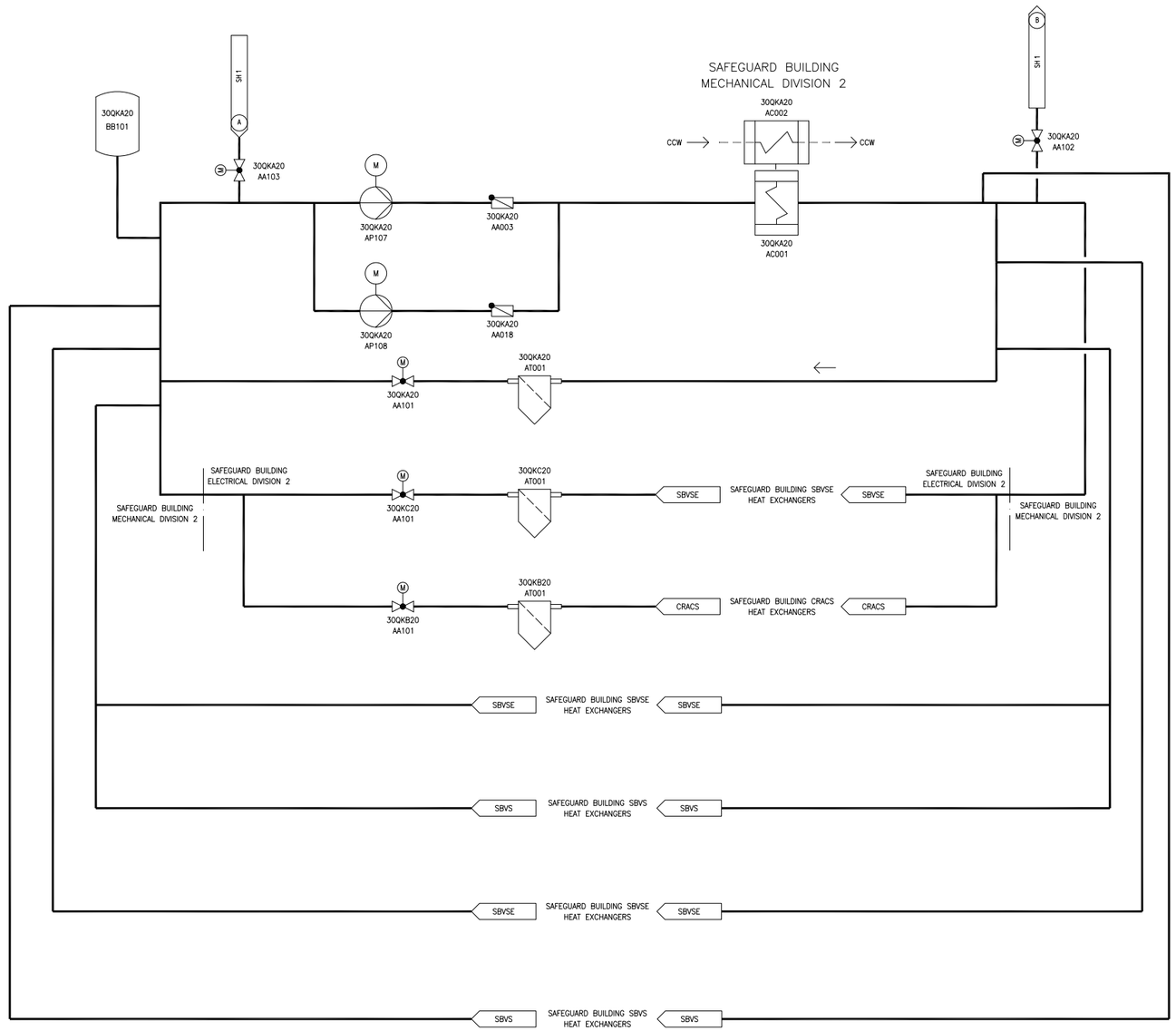

1	III	I
DESIGN AREA	ASME	SSC SEISMIC CLASS

REV 002
QKA02T1

Figure 2.7.2-1—Safety Chilled Water System Functional Arrangement
Sheet 3 of 4

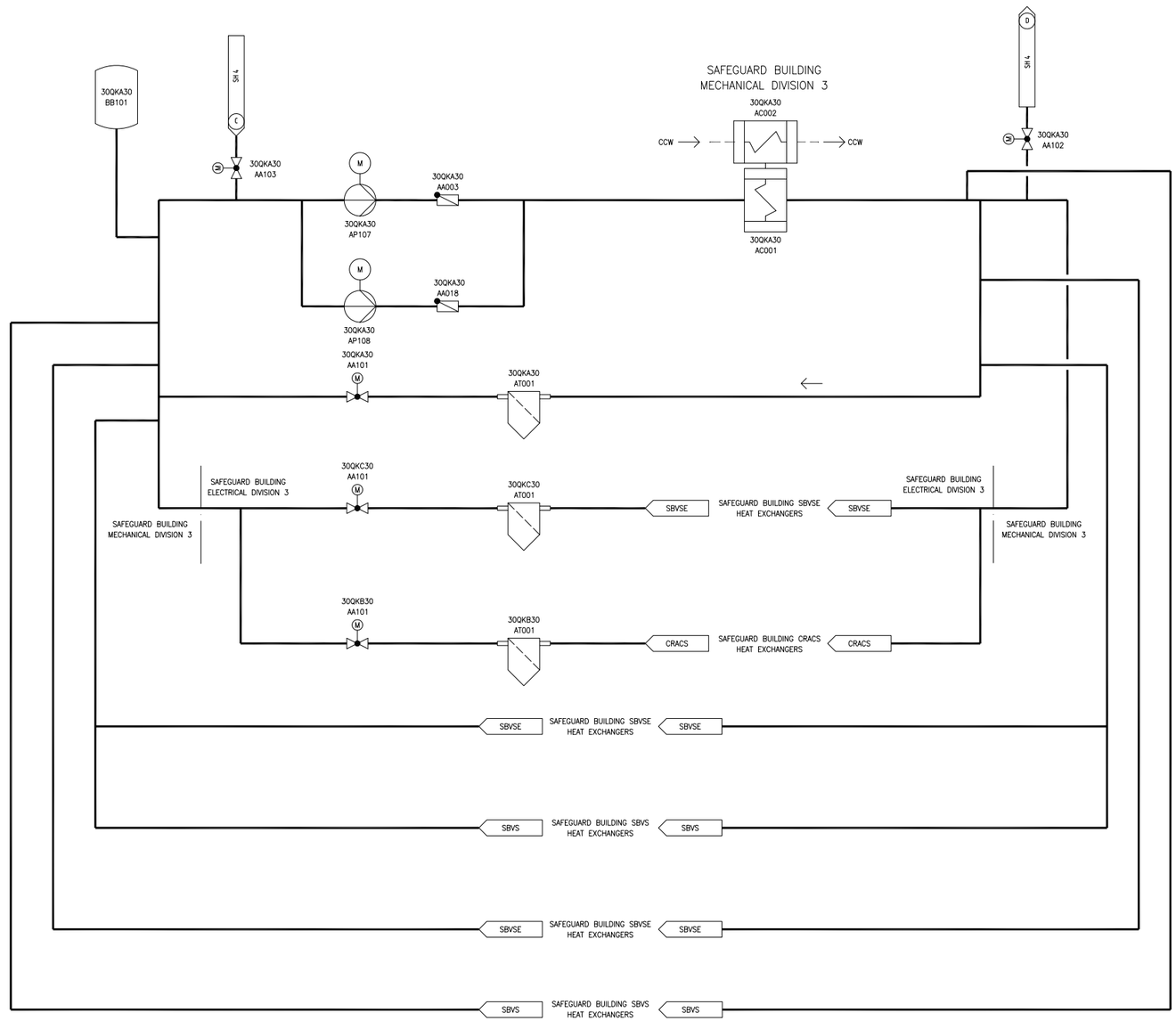

1	III	I
DESIGN AREA	ASME	SSC SEISMIC CLASS

REV 002
QKA03T1

Figure 2.7.2-1—Safety Chilled Water System Functional Arrangement
Sheet 4 of 4

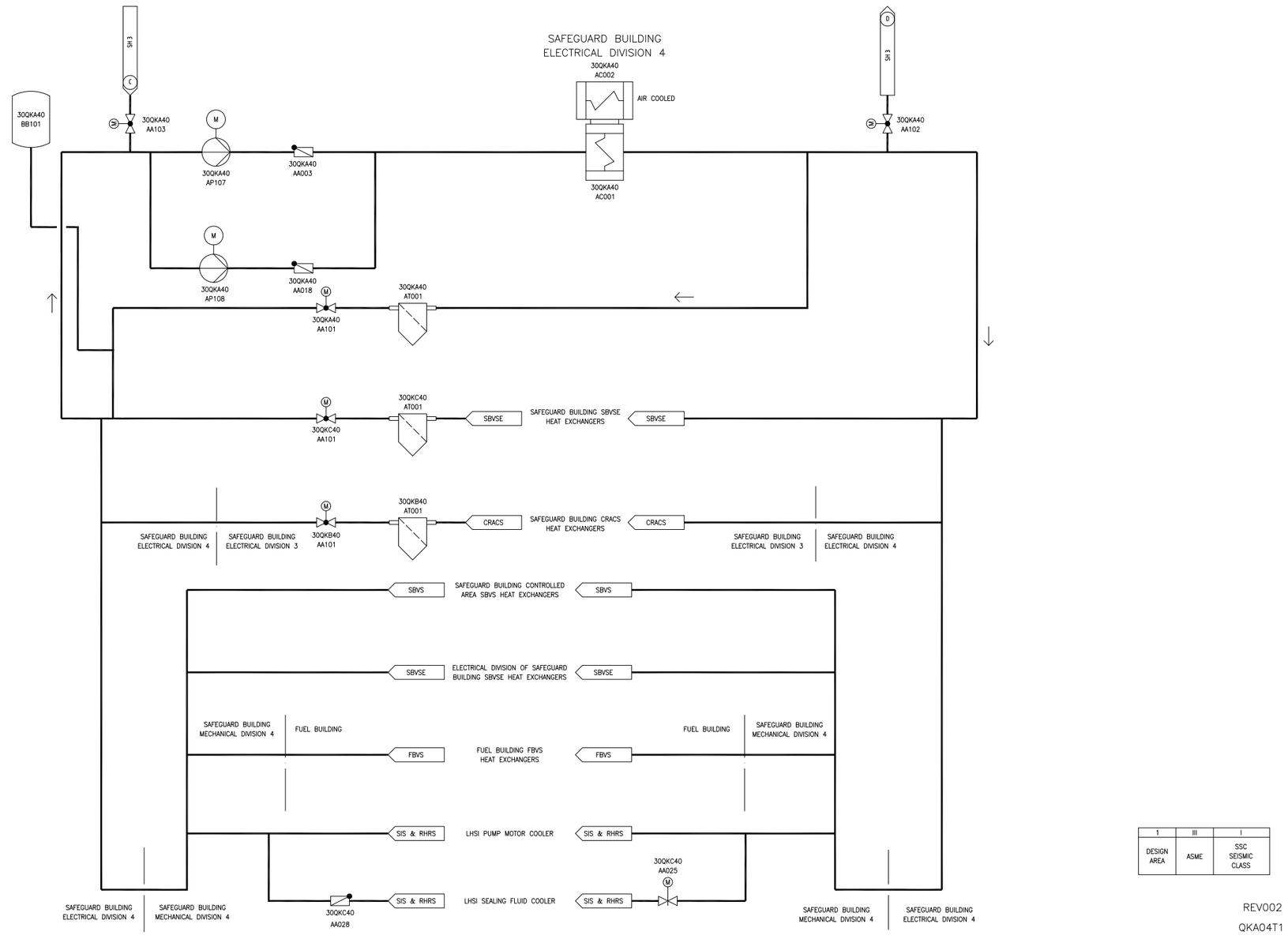

Next File