Figure 2.6.13-1—Essential Service Water Pump Building Ventilation System Functional Arrangement

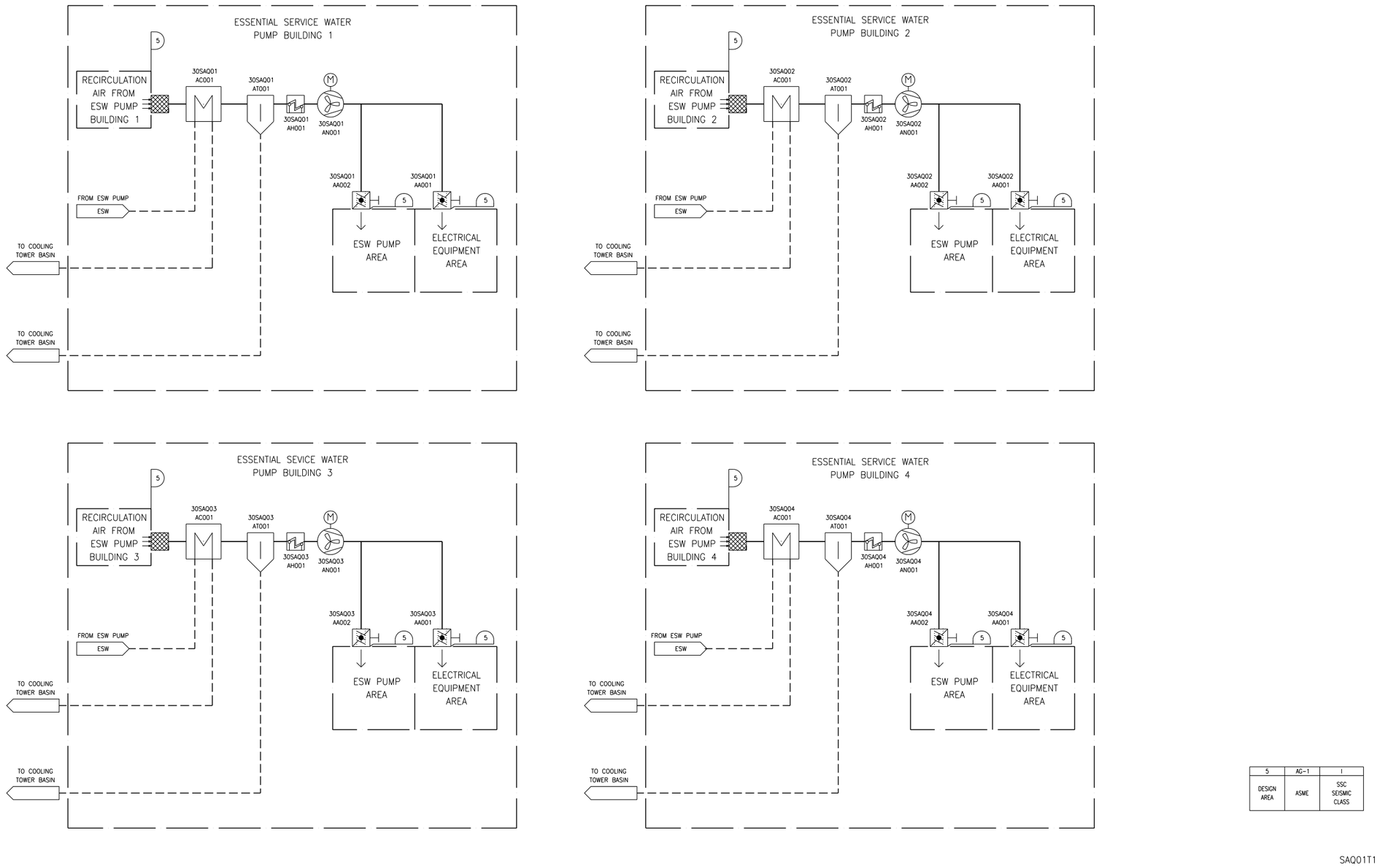

Next File