Figure 2.6.9-1—Emergency Power Generating Building Ventilation System Functional Arrangement, Division 1

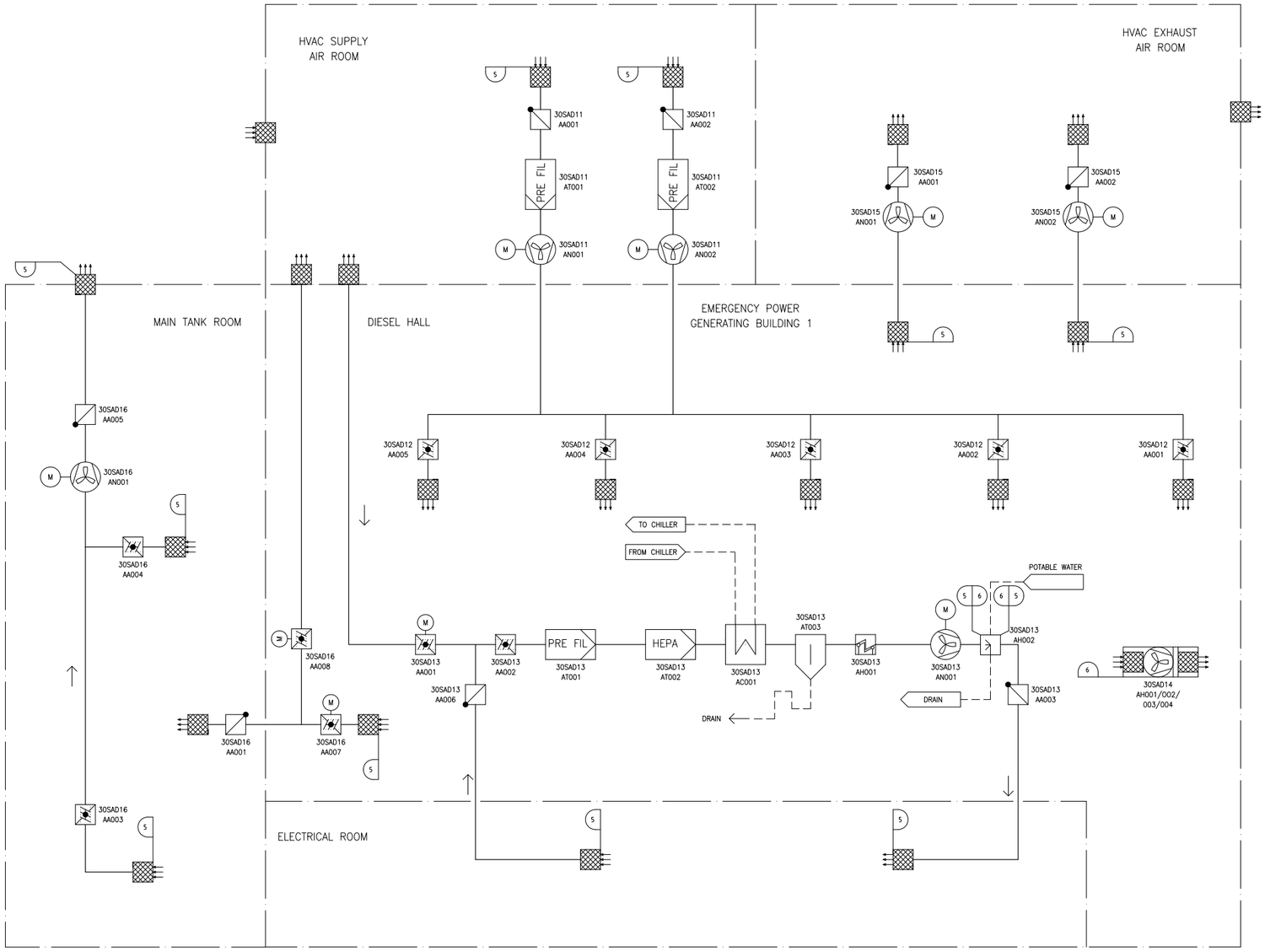

6	AG-1	II
5	AG-1	I
DESIGN AREA	ASME	SSC SEISMIC CLASS

REV 002
SAD01T1

Figure 2.6.9-2—Emergency Power Generating Building Ventilation System Functional Arrangement, Division 2

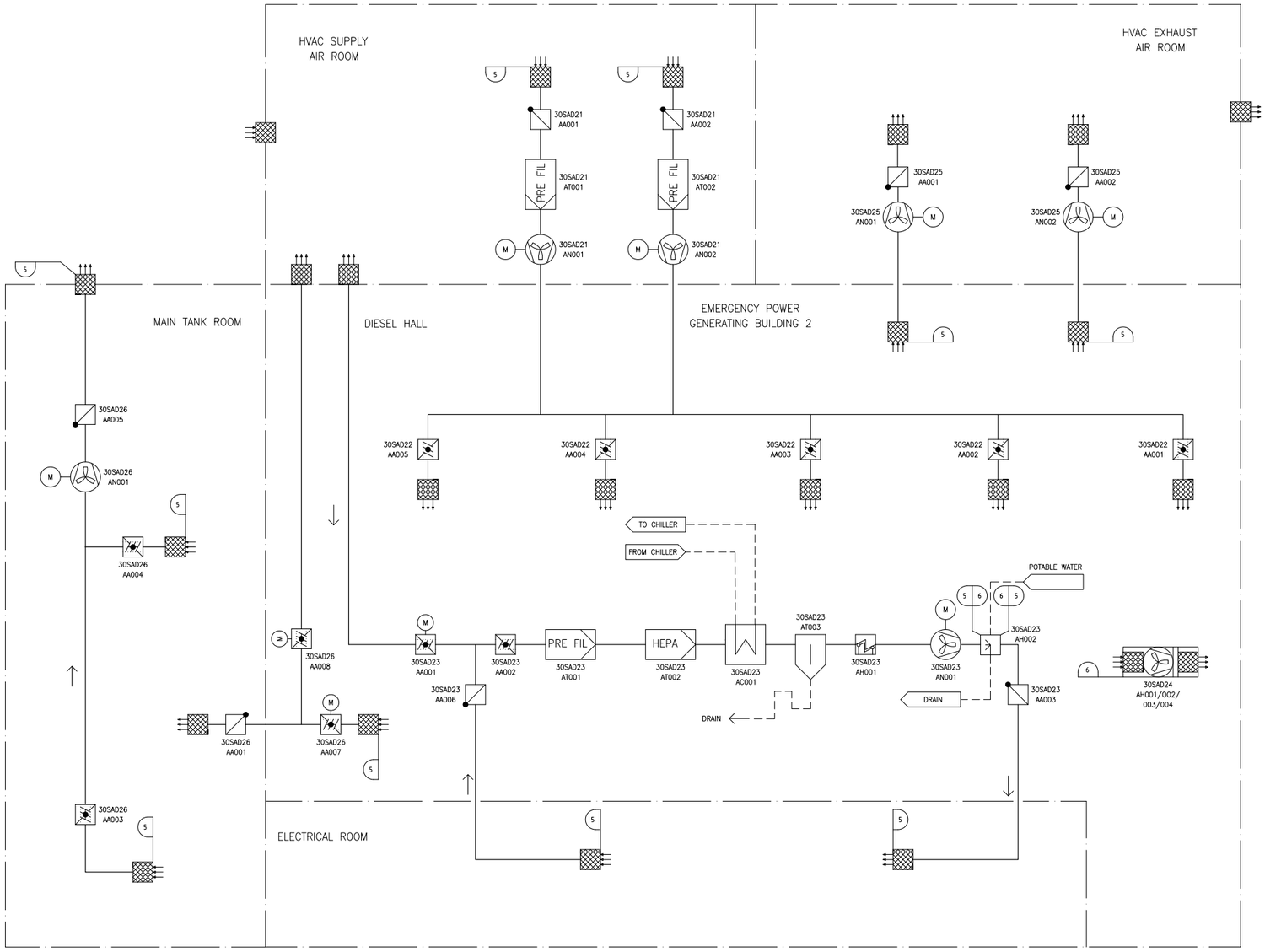

6	AG-1	II
5	AG-1	I
DESIGN AREA	ASME	SSC SEISMIC CLASS

REV 002
SAD02T1

Figure 2.6.9-3—Emergency Power Generating Building Ventilation System Functional Arrangement, Division 3

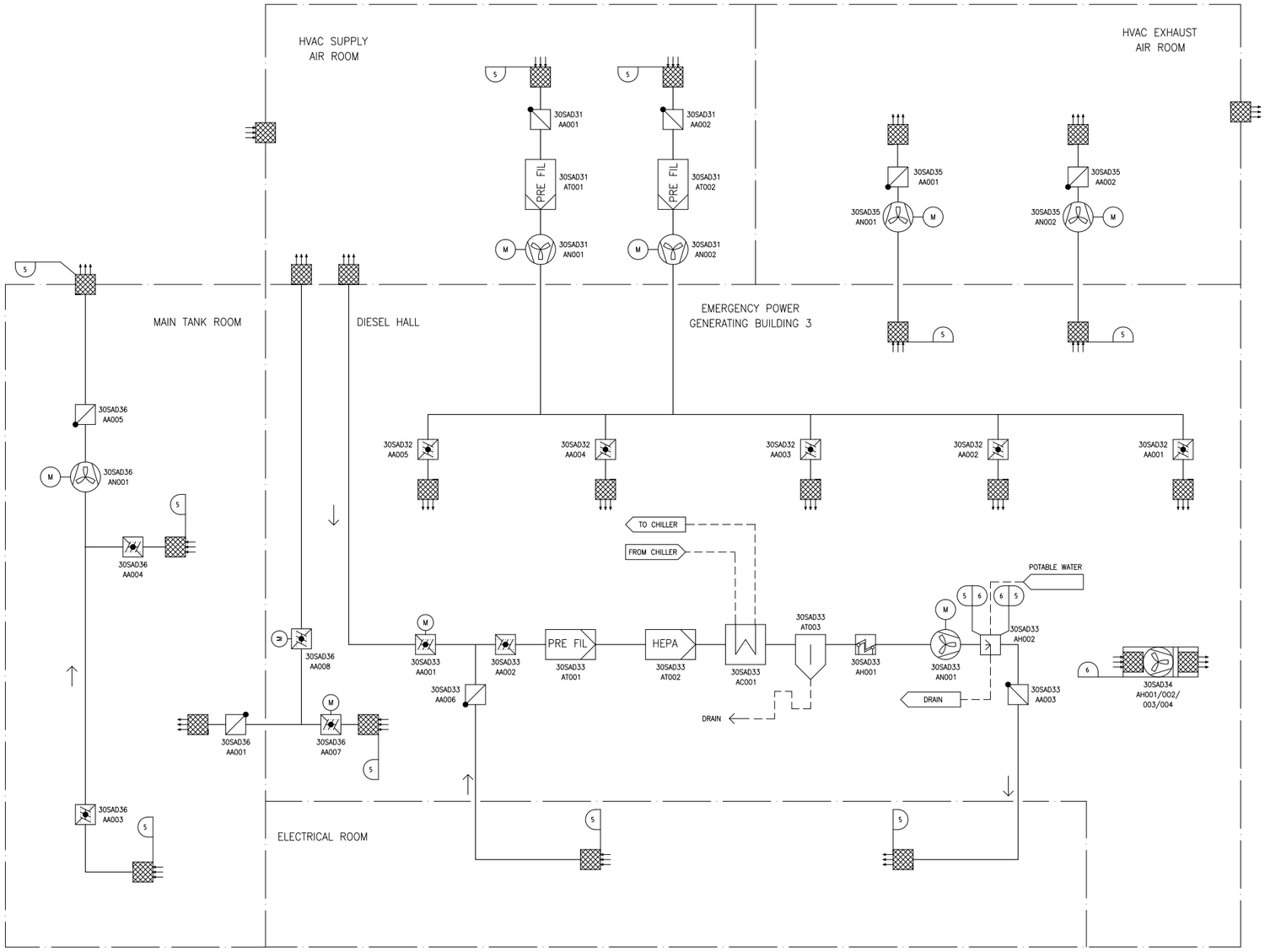

Figure 2.6.9-4—Emergency Power Generating Building Ventilation System Functional Arrangement, Division 4

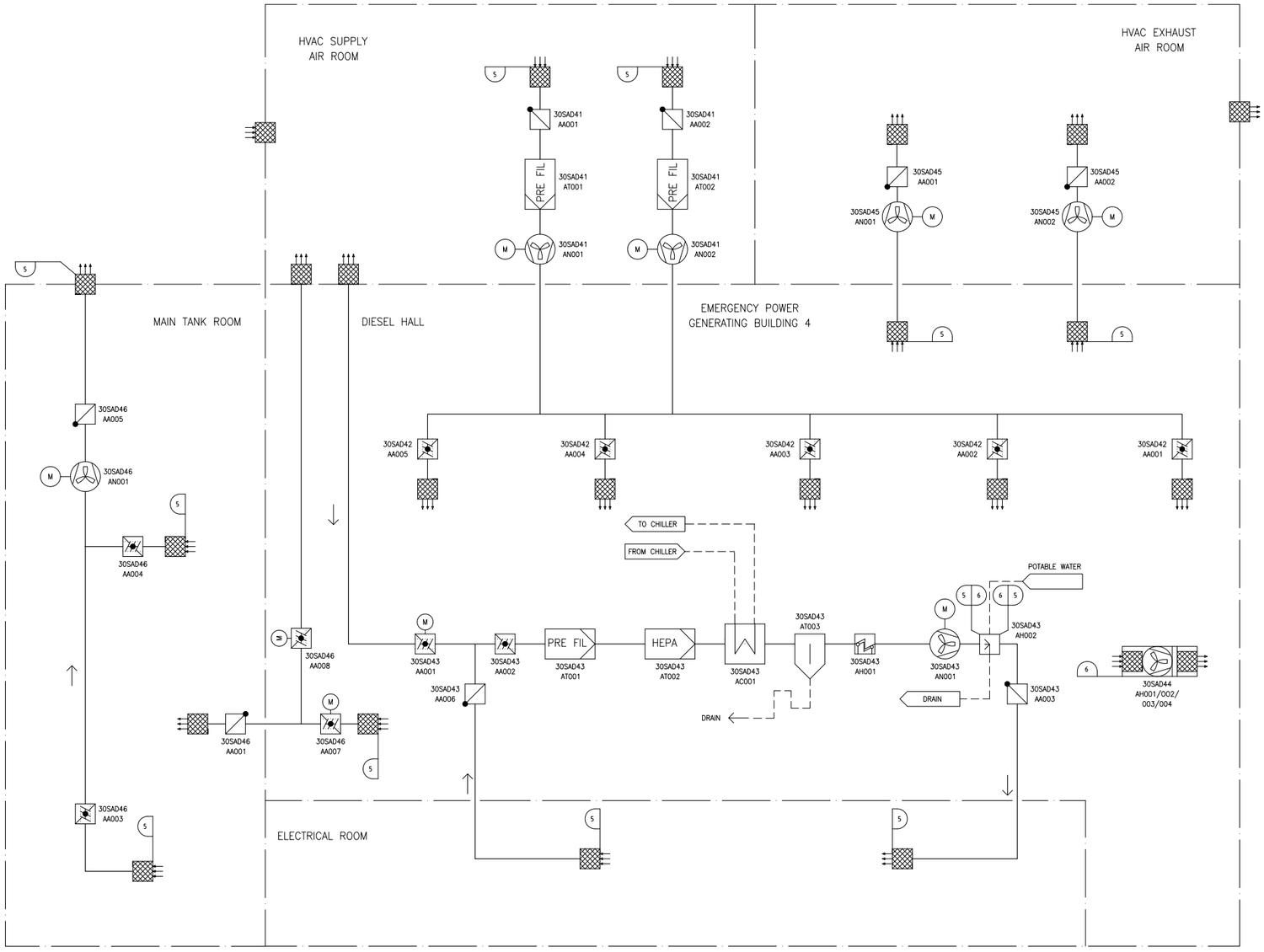

Next File