Figure 2.6.6-1—Safeguard Building Controlled-Area Ventilation System Air Supply Functional Arrangement

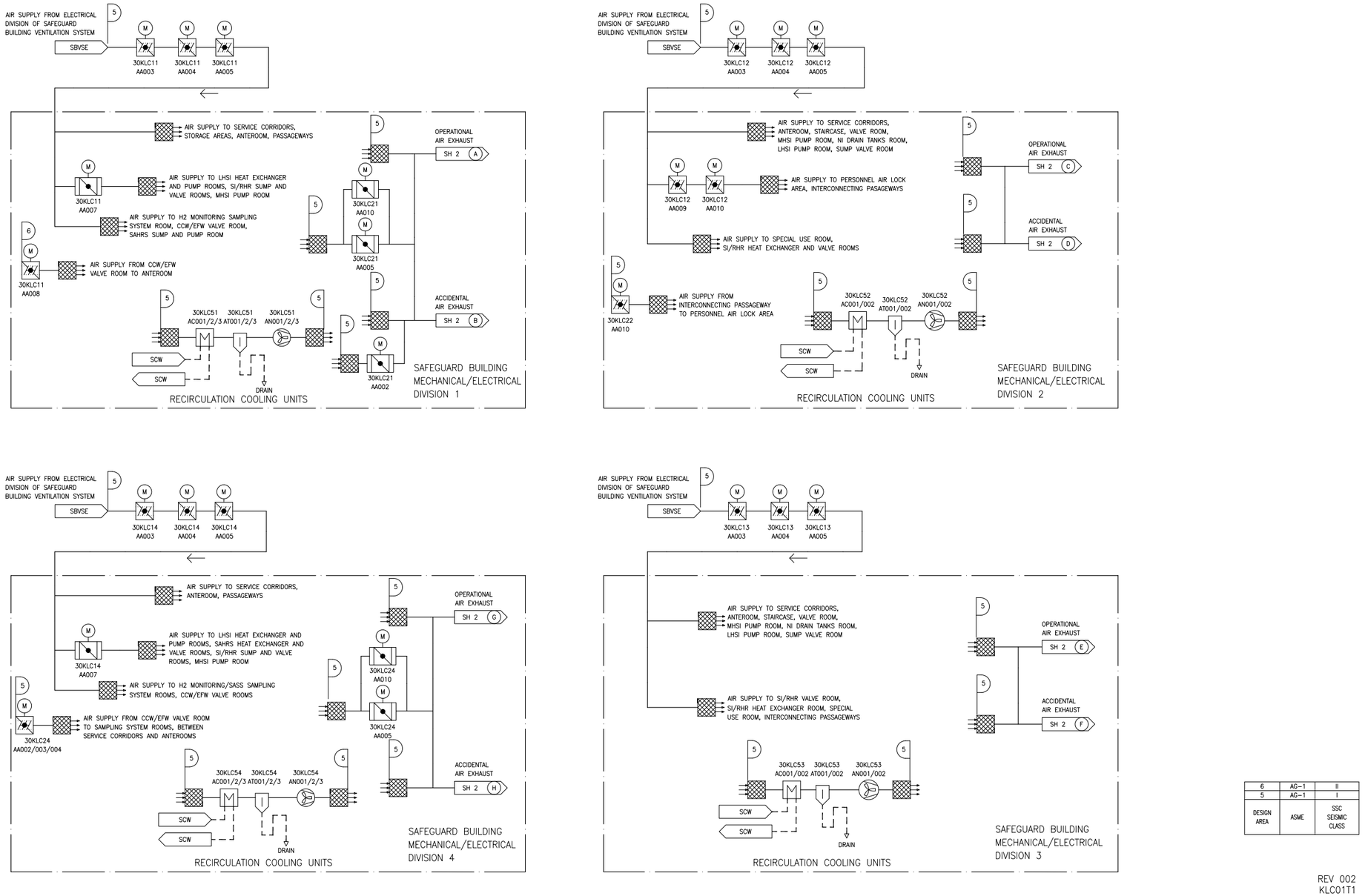

Figure 2.6.6-2—Safeguard Building Controlled-Area Ventilation System Exhaust Air Functional Arrangement

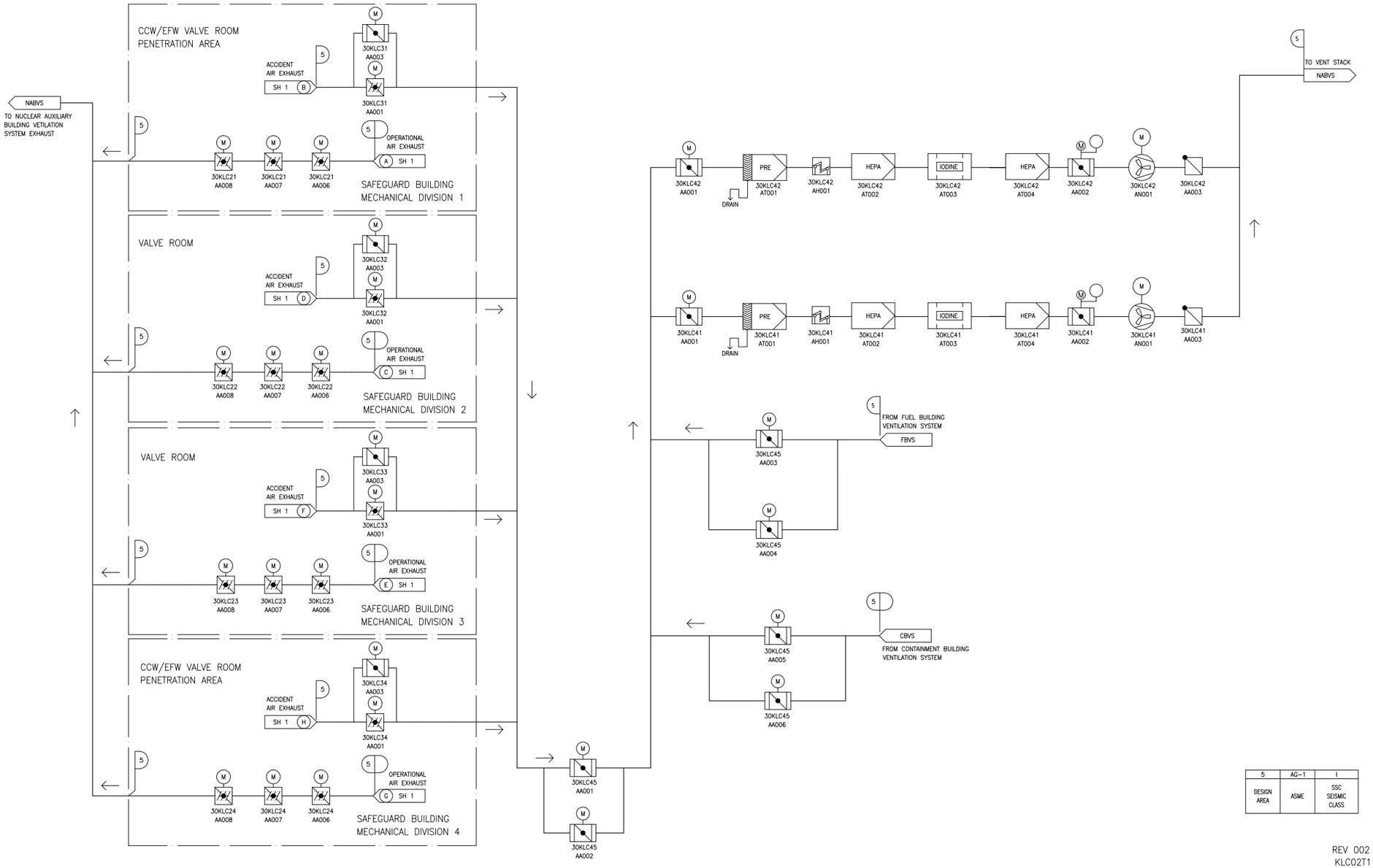

Next File