Figure 2.6.1-1—Control Room Air Intake and CREF (Iodine Filtration) Train Subsystem Functional Arrangement

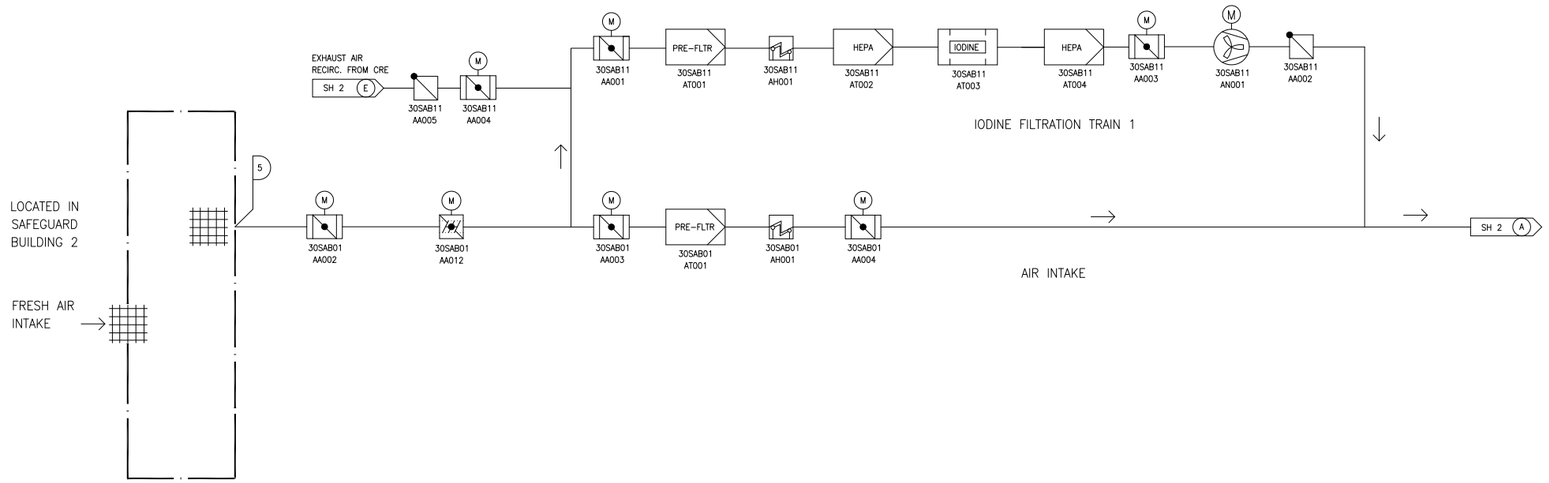

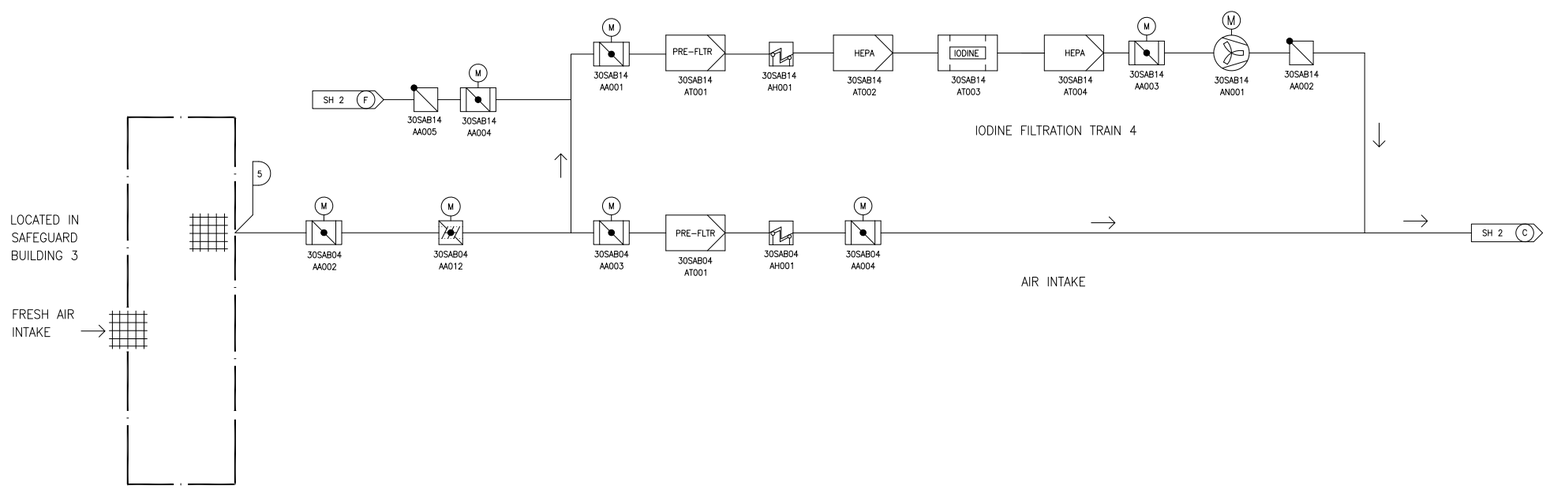

5	AG-1	I
DESIGN AREA	ASME	SSC SEISMIC CLASS

REV 002
SAB01T1

Figure 2.6.1-2—Control Room Air Conditioning and Recirculation Air Handling Subsystem Functional Arrangement

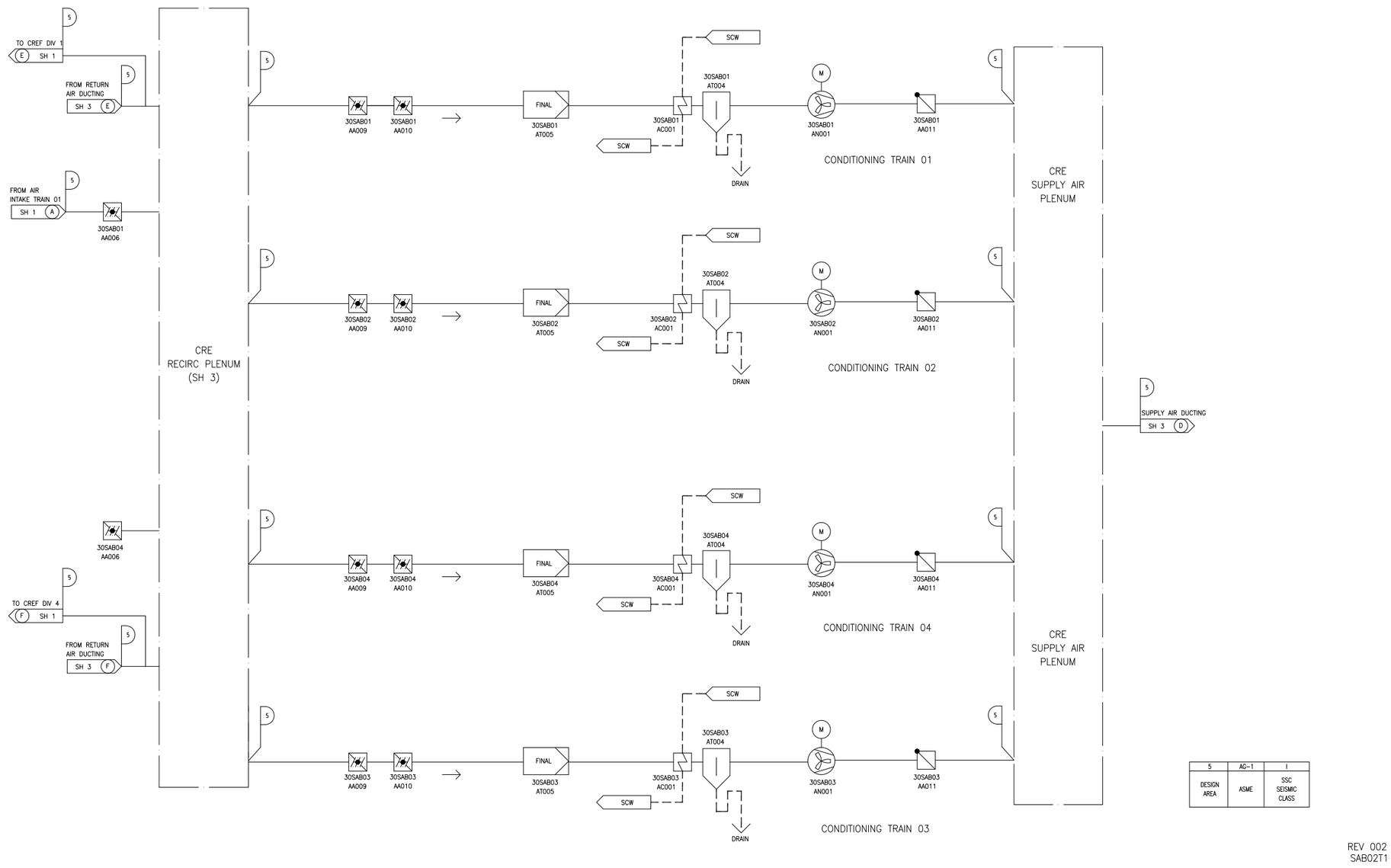

Figure 2.6.1-3—CRE Air Supply and Recirculation Subsystem Functional Arrangement

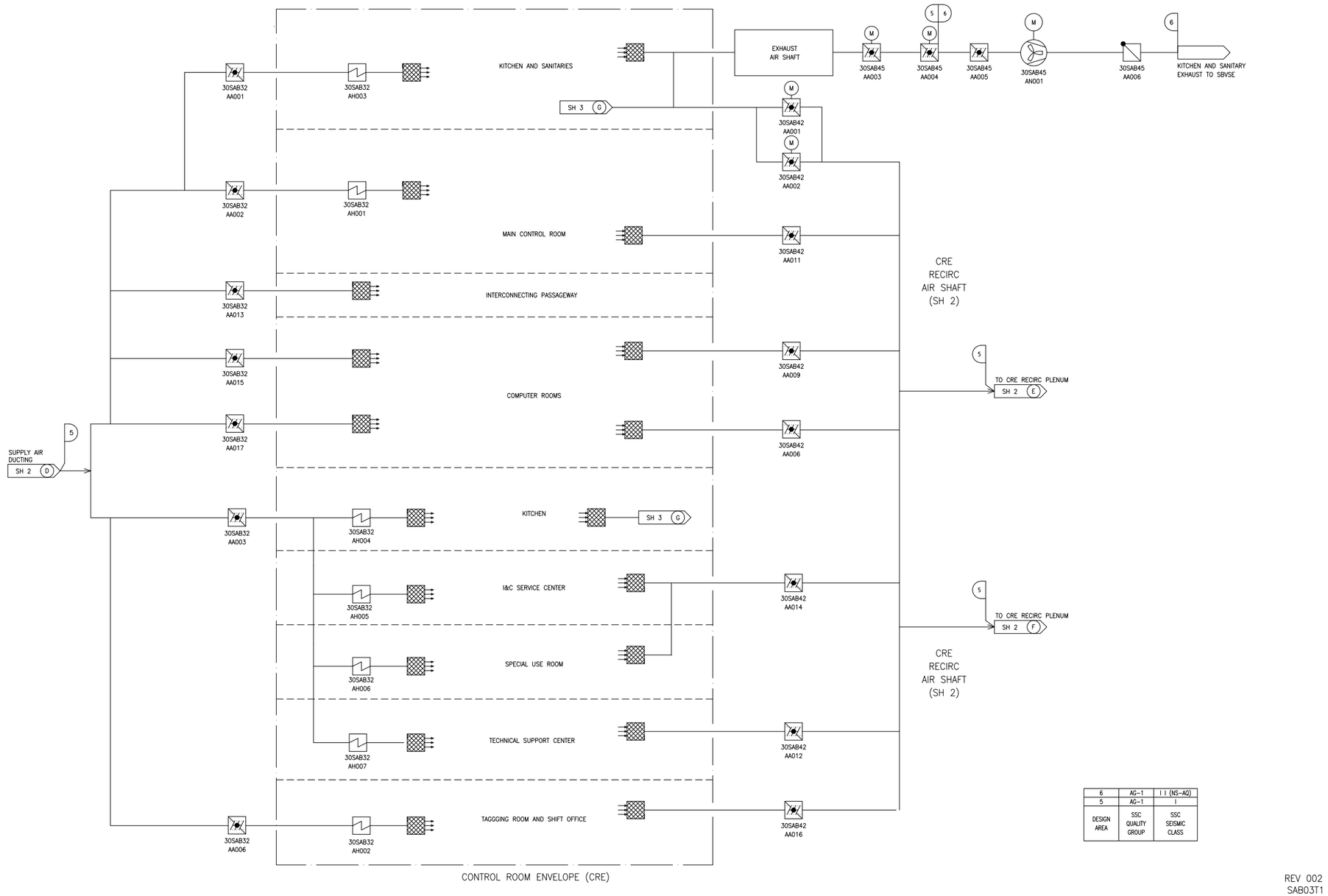

Next File