Analysis of Spent Nuclear Fuel Transportation Package Response to Severe Fire Accidents

Christopher S. Bajwa, Earl P. Easton
U.S. Nuclear Regulatory Commission
Washington, DC

Sarah Suffield, Harold Adkins, Nicholas Klymyshyn, Judith Cuta
Pacific Northwest National Laboratory
Richland, WA

© 2010 ANSYS, Inc. All rights reserved.

ANSYS, Inc. Proprietary

Outline

- **Introduction**
- **MacArthur Maze Fire**
  - Accident Description
  - Post Accident Analysis
    - Samples Collected
    - Material Analyses
    - Thermal Exposure Tests
    - Analysis of Tanker Truck Materials
  - Characterization of MM fire for Modeling
  - Spent Nuclear Fuel Transportation Package Response
    - GA-4 Legal Weight Truck Transportation package
      - Package Features
      - Selection Criteria
      - Analysis Model
      - NCT and HAC results
    - GA-4 exposure to MacArthur Maze Fire Scenario
      - Thermal and Structural Preliminary Findings

© 2010 ANSYS, Inc. All rights reserved.

ANSYS, Inc. Proprietary

Introduction

- **Title 10 *Code of Federal Regulations* (CFR) Part 71 – Packaging and Transportation of Radioactive Materials**
  - Section 73: Hypothetical Accident Conditions (HAC)

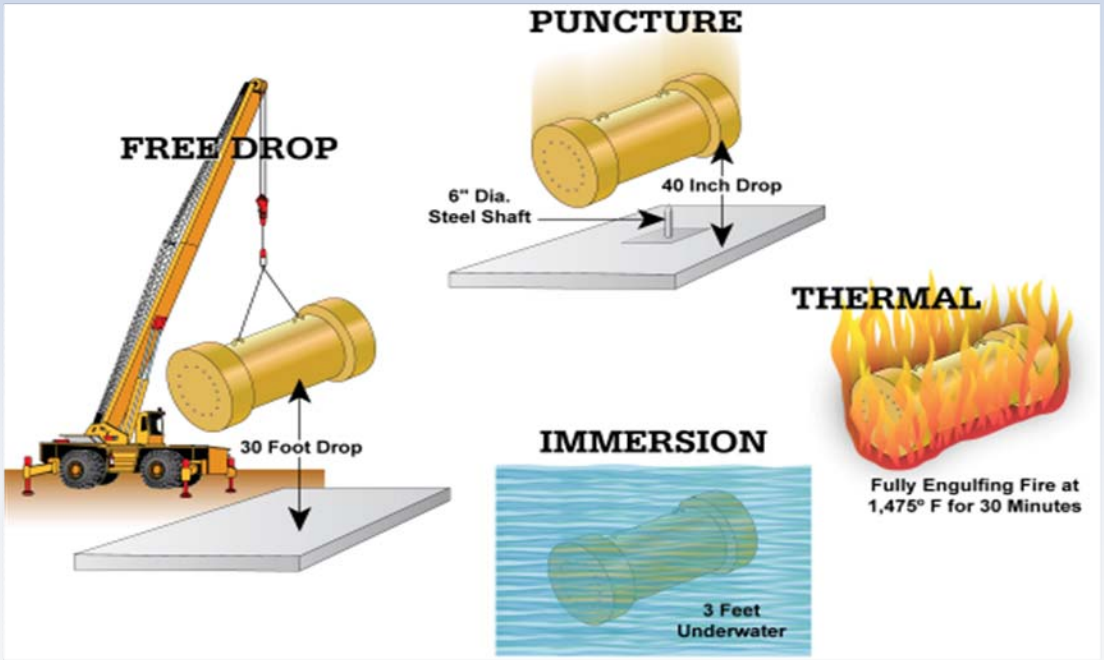

- **Evaluate real world accidents against this standard**
- **Do the regulations cover recent severe accidents?**

© 2010 ANSYS, Inc. All rights reserved.

ANSYS, Inc. Proprietary

MacArthur Maze Fire

- **Accident and fire occurred April 29, 2007, 3:45 AM**
- **Gasoline double tanker truck**
  - 32,500 liters [8,600 gallons] of gasoline
- **Traveling south along Interstate 880 in Oakland, California**

- **Accident occurred in the MacArthur Maze, an interchange connecting I-80, I-580, and I-880**
- **A portion of the I-580 overpass directly above I-880 collapsed 17 minutes after the fire started**

© 2010 ANSYS, Inc. All rights reserved.

ANSYS, Inc. Proprietary

Accident Location

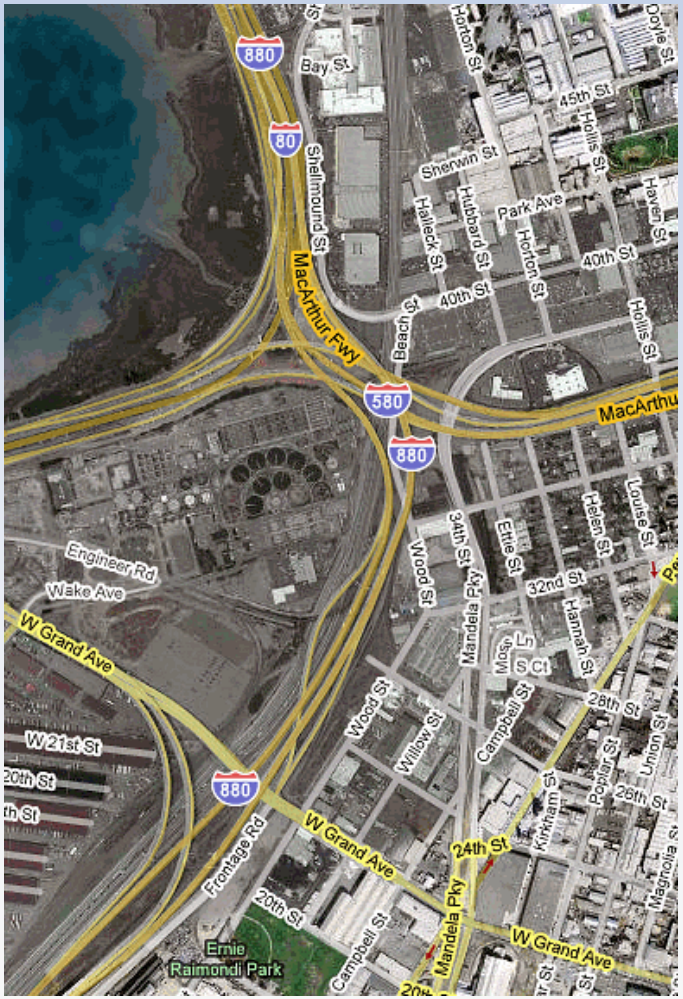

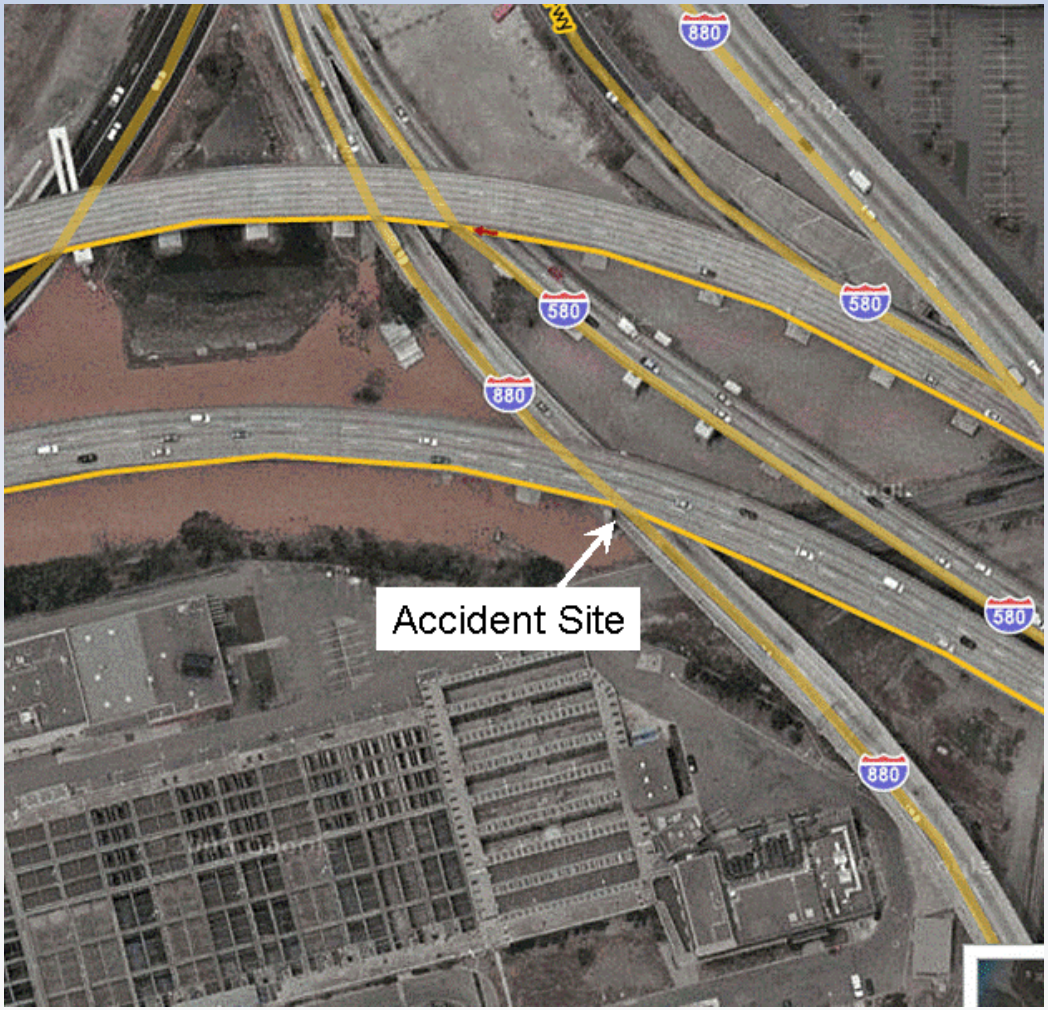

© 2010 ANSYS, Inc. All rights reserved.

ANSYS, Inc. Proprietary

The MacArthur Maze Fire Scene

6m 48s (03:44:32 PDT)

16m 41s (03:54:25 PDT)

19m 55s (03:57:33 PDT)

37m 16s (04:15:00 PDT)

72m 16s (04:50:00 PDT)

107m 13s (05:25:57 PDT)

© 2010 ANSYS, Inc. All rights reserved.

ANSYS, Inc. Proprietary

Post-Fire Configuration

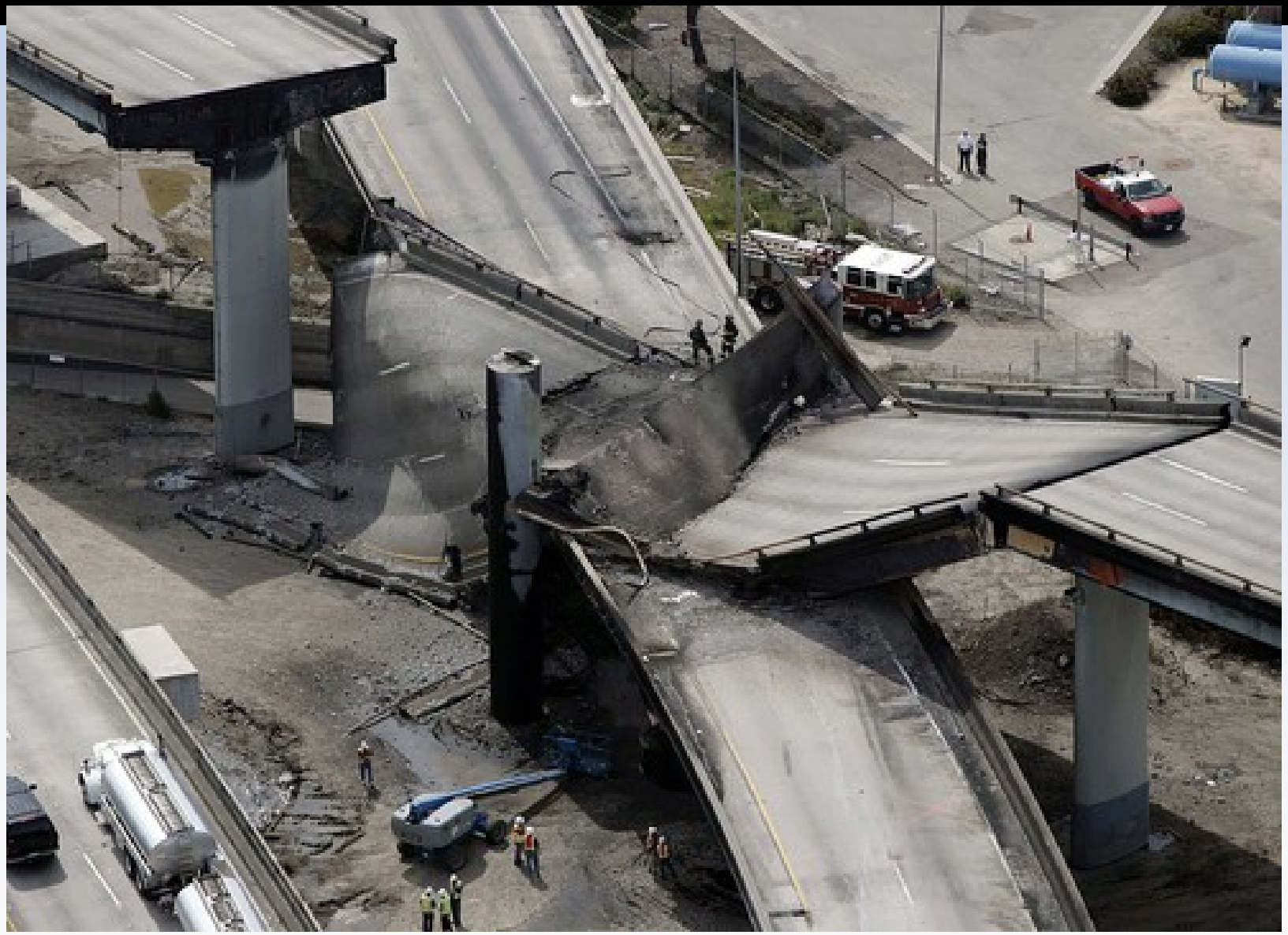

© 2010 ANSYS, Inc. All rights reserved.

ANSYS, Inc. Proprietary

Material Temperature Estimates in the MacArthur Maze Fire

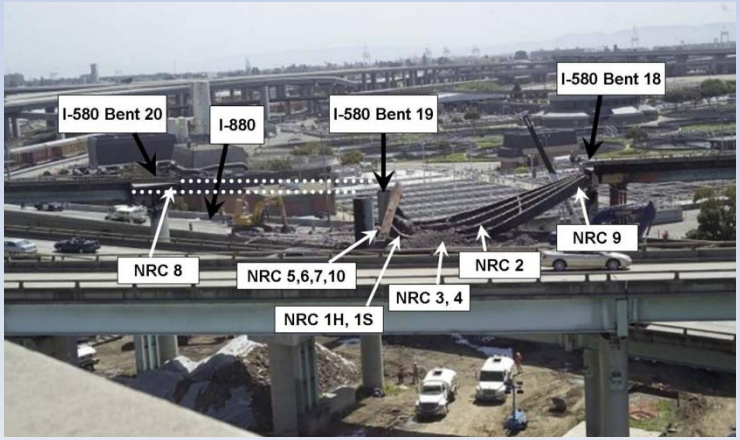

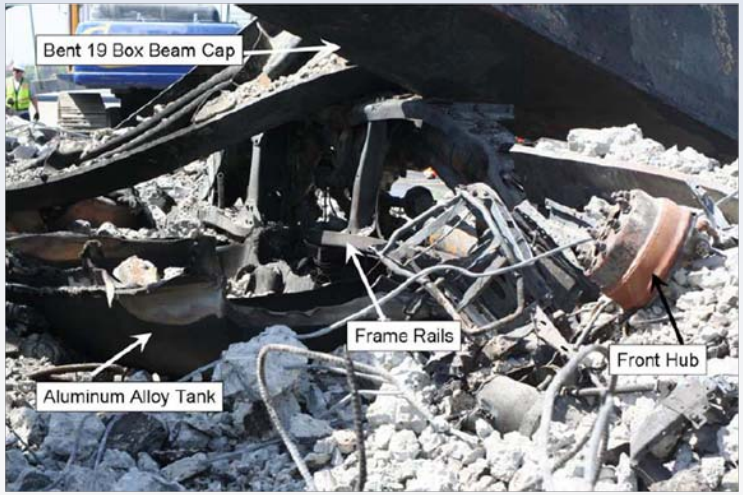

- **NRC and SwRI staff collected samples to determine temperatures experienced by girders and truck during the fire**
- **Performed isothermal exposures of unaltered specimen (Sample NRC 9) to 900ºC (1652ºF) to determine weld transformation temperatures**
- **Performed metallurgical analysis of girder and truck structures, including microstructure evaluation of weld regions**

© 2010 ANSYS, Inc. All rights reserved.

ANSYS, Inc. Proprietary

Overpass Demolition

Girder cutting after concrete removal

Remnants of tanker truck

© 2010 ANSYS, Inc. All rights reserved.

ANSYS, Inc. Proprietary

Fire Damaged Girders

© 2010 ANSYS, Inc. All rights reserved.

ANSYS, Inc. Proprietary

JOURNAL
PG 12
MB 18

Samples Collected

Sample Number	Girder	Location (Bent)	Weld Metal?	Description
NRC 1H	Plate # 3	19	No	Plate Girder with rivet holes
NRC 1S	Plate # 3	19	Yes	Plate Girder with stiffener
NRC 2	Plate # 4	18 – 19	Yes	Plate Girder with butt weld
NRC 3	Plate # 5	18 – 19	Yes	Plate Girder with stiffener - heavy distortion
NRC 4	Plate # 5	18 – 19	Yes	Plate Girder stiffener - medium distortion
NRC 5	Box # 7	19	Yes	Box Girder lower plate with side and weld
NRC 6	Box # 8	19	No	Plate Girder segment attached to Box Girder
NRC 7	Box # 8	19	No	Rivet head
NRC 8	Plate # 10	20	Yes	Plate Girder Web and plate with weld
NRC 9	Plate # 12	18	Yes	Plate Girder with stiffener
NRC 10	Box # 8	19	No	Paint Flakes

© 2010 ANSYS, Inc. All rights reserved.

ANSYS, Inc. Proprietary

Girder Material Temperature Estimates

Sample Number	Girder	Location (Bent)	Estimated maximum temperature (ºC)	Description
NRC 1H	Plate # 3	19		Plate Girder with rivet holes
NRC 1S	Plate # 3	19	800	Plate Girder with stiffener
NRC 2	Plate # 4	18 – 19		Plate Girder with butt weld
NRC 3	Plate # 5	18 – 19	900	Plate Girder with stiffener - heavy distortion
NRC 4	Plate # 5	18 – 19	850	Plate Girder stiffener - medium distortion
NRC 5	Box # 7	19	300	Box Girder lower plate with side and weld
NRC 6	Box # 8	19		Plate Girder segment attached to Box Girder
NRC 7	Box # 8	19	400	Rivet head
NRC 8	Plate # 10	20		Plate Girder Web and plate with weld
NRC 9	Plate # 12	18	200	Plate Girder with stiffener (no evidence of overheating)
NRC 10	Box # 8	19	400	Paint Flakes

© 2010 ANSYS, Inc. All rights reserved.

ANSYS, Inc. Proprietary

Tanker Truck Materials

© 2010 ANSYS, Inc. All rights reserved.

ANSYS, Inc. Proprietary

Truck Samples Collected

Sample Identification	Description
Truck Sample 1	Front tire cord from left side of vehicle
Truck Sample 2	Tire cord from #5 axle on right side of vehicle
Truck Sample 3	Brake pad located near rear of vehicle
Truck Sample 4	Rim component sample from #5 axle
Truck Sample 5	Spring located near rear of truck
Truck Sample 6	Large bolts (3) located on frame and near engine
Truck Sample 7	Grade 5 bolt located on frame
Truck Sample 8	Copper wire ground strap located on frame
Truck Sample 9	Copper wire battery cable
Truck Sample 10	Copper wire electrical system wiring located on frame and melted aluminum
Truck Sample 11	Fitting with brass located on engine
Truck Sample 12	Bolt from engine passenger side with steel wire and melted aluminum
Truck Sample 13	Aluminum screen from radiator
Truck Sample 14	Aluminum rim from dual wheel axle
Truck Sample 15	Aluminum tank section
Truck Sample 16	Glass mirror from passenger side
Truck Sample 17	Stainless steel mirror support bracket

© 2010 ANSYS, Inc. All rights reserved.

ANSYS, Inc. Proprietary

Sample Photos

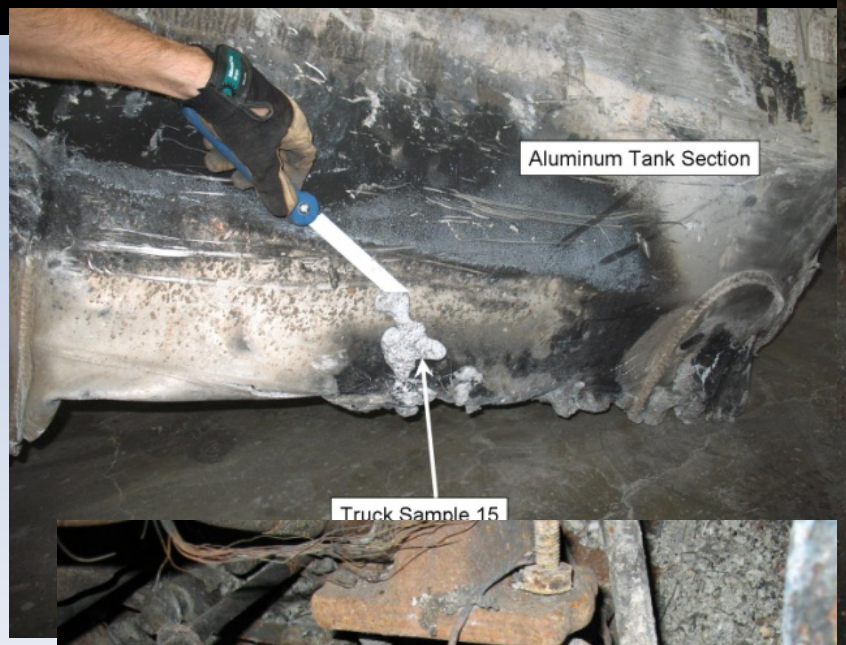

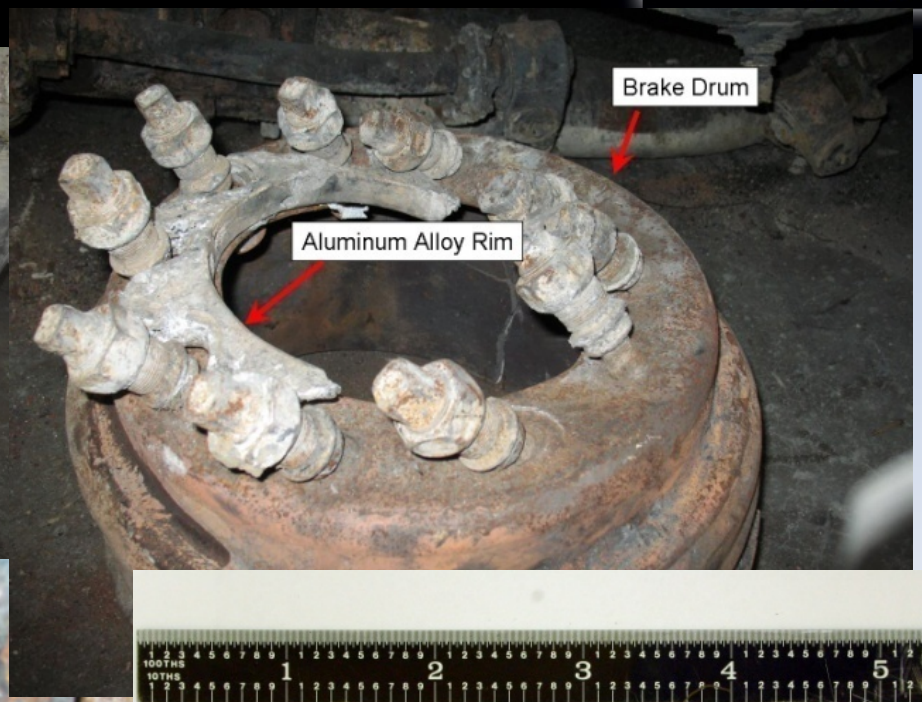

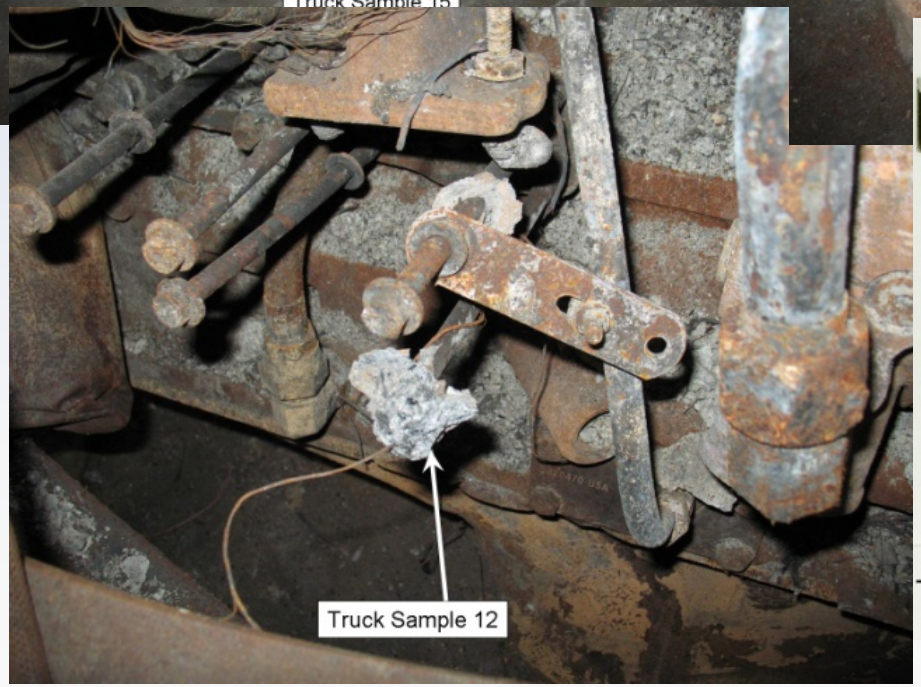

© 2010 ANSYS, Inc. All rights reserved.

ANSYS, Inc. Proprietary

Truck Material Temperature Estimates

Sample Identification	*Estimated maximum temperature (ºC)*	*Description*
Truck Sample 1		Front tire cord from left side of vehicle
Truck Sample 2		Tire cord from #5 axle on right side of vehicle
Truck Sample 3		Brake pad located near rear of vehicle
Truck Sample 4		Rim component sample from #5 axle
Truck Sample 5		Spring located near rear of truck
Truck Sample 6	750	Large bolts (3) located on frame and near engine
Truck Sample 7	500	Grade 5 bolt located on frame
Truck Sample 8	590	Copper wire ground strap located on frame
Truck Sample 9	590	Copper wire battery cable
Truck Sample 10	590	Copper wire electrical system wiring located on frame and melted aluminum
Truck Sample 11	700	Fitting with brass located on engine
Truck Sample 12	900	Bolt from engine passenger side with steel wire and melted aluminum
Truck Sample 13	720	Aluminum screen from radiator
Truck Sample 14		Aluminum rim from dual wheel axle
Truck Sample 15	720	Aluminum tank section
Truck Sample 16		Glass mirror from passenger side
Truck Sample 17	540	Stainless steel mirror support bracket

MacArthur Maze Fire: Materials Analyses Conclusions

- **Based on the samples collected the maximum temperatures of the I-580 overpass were estimated to range from 850° C [1,562° F] to approximately 1,000° C [1,832° F].**
- **Near the truck, the maximum exposure temperature is estimated to be at least 720° C [1,328° F] and less than 930° C [1,706° F].**
- **The hottest gas temperatures during the fire were located above the I-880 roadway near the steel girders of the I-580 overpass.**

© 2010 ANSYS, Inc. All rights reserved.

ANSYS, Inc. Proprietary

MacArthur Maze Fire Model

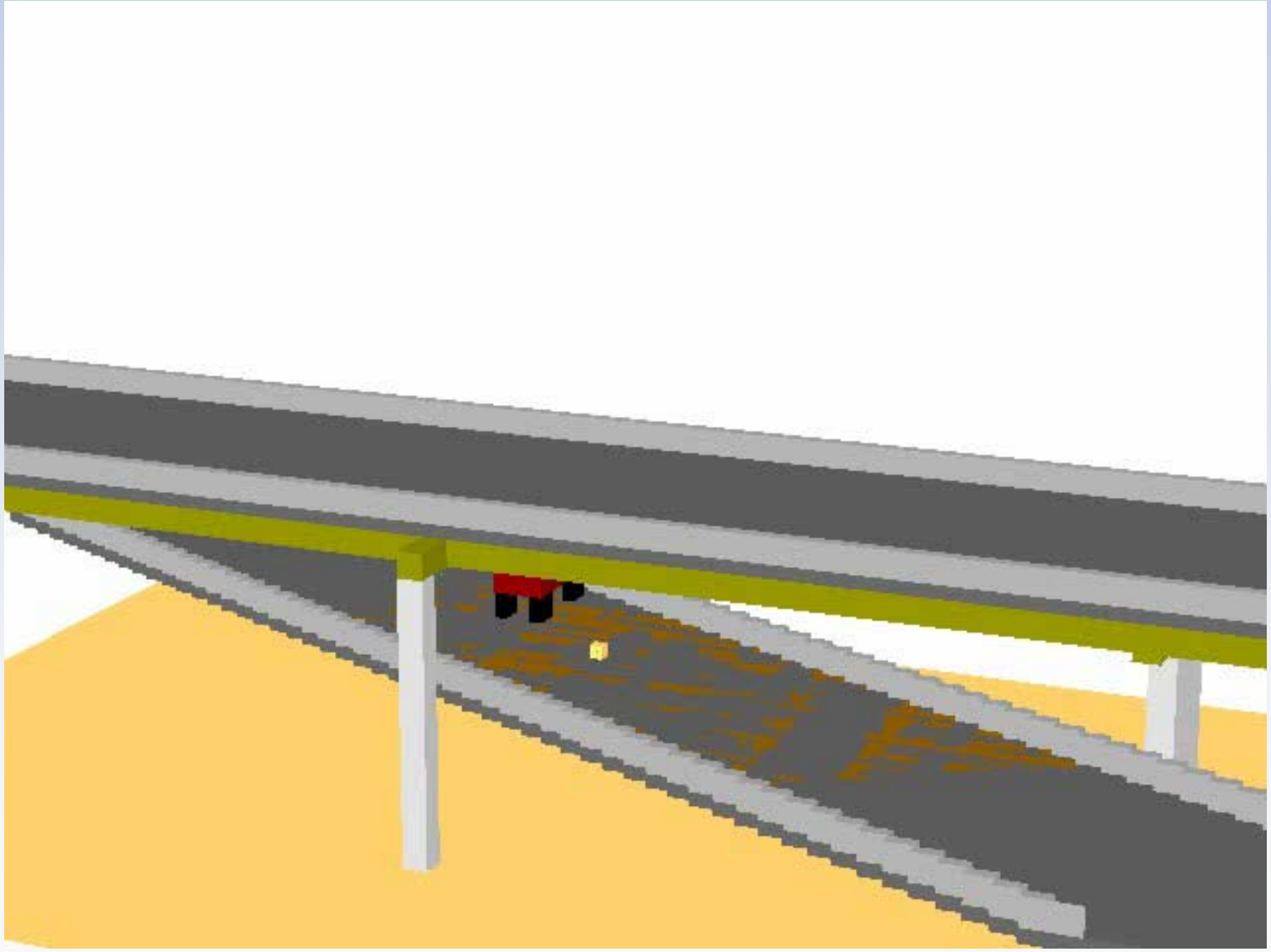

© 2010 ANSYS, Inc. All rights reserved.

ANSYS, Inc. Proprietary

Characterization of MM fire for Modeling

- **This fire went through three distinct phases:**
  - A large open pool fire lasting approximately 17 minutes
  - A period of decreasing pool size (lasting approximately 20 minutes) due to complete collapse of Bent 19-20 overhead span and intrusion of partially collapsed Bent 18-19 overhead span
  - A smaller open pool fire lasting approximately 65 minutes, ending with a rapid decrease in fire size and intensity over approximately 5 minutes

© 2010 ANSYS, Inc. All rights reserved.

ANSYS, Inc. Proprietary

Characterization of MM fire for Modeling (cont.)

- **Evaluation of potential effects of this fire scenario on an SNF package requires analysis of five different problems**
  - Exposure of the package to
    1. a large fully engulfing fire (0-17 Mins)
    2. the physical impact of a collapsing overhead roadway (Between Bent 19 and Bent 20)
    3. a fire modeling the 20-minute transition from a large to a small pool fire (17 to 37 Mins)
    4. a partially engulfing fire when covered by the fallen roadway (37 to 108 mins)
    5. post-fire cooldown while covered by the fallen roadway

© 2010 ANSYS, Inc. All rights reserved.

ANSYS, Inc. Proprietary

Estimate of Maximum Flame Temperature: Pre-collapse open pool fire

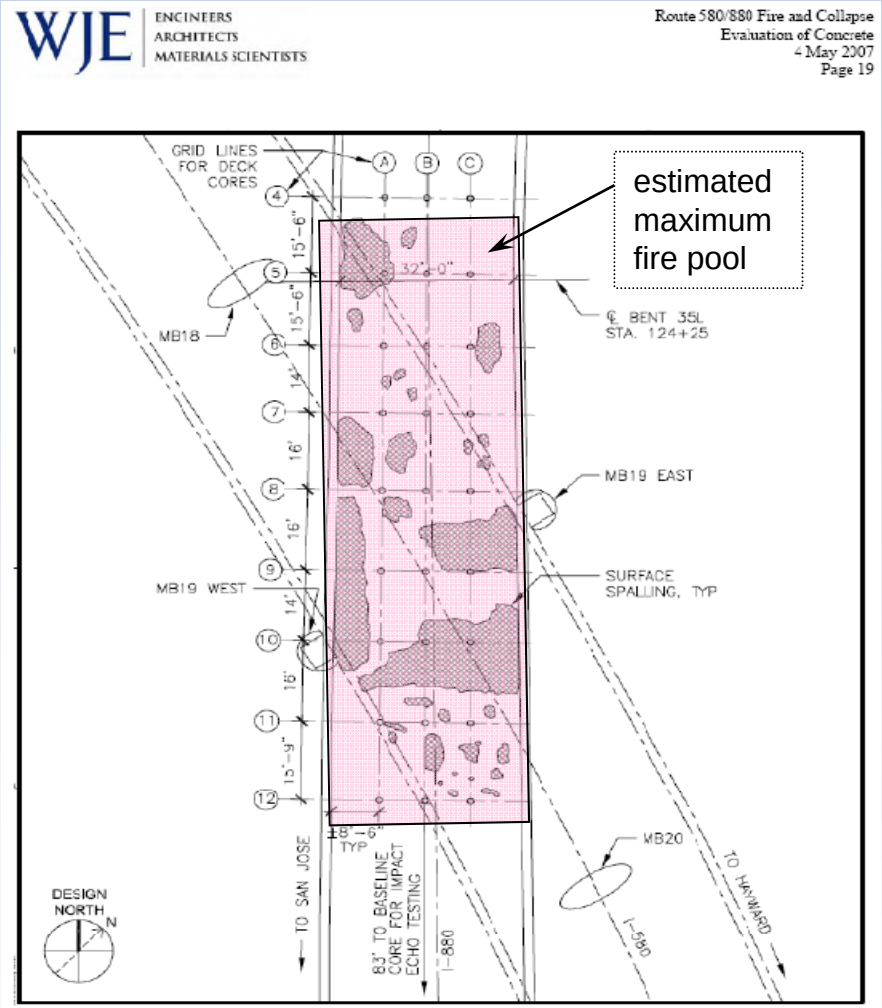

- **Based on the fire video and spalling patterns in roadway concrete, maximum fire pool size (pre-collapse) is estimated as 2,781 ft^2 (258 m^2)**
- **Large open-pool hydrocarbon fires can be characterized with a uniform flame temperature of approximately 1000ºC (1832ºF)**
- **The I-580 roadway overhead trapped hot gas rising from fire, resulting in higher flame temperatures than would be obtained in a typical unconstrained open pool fire**

© 2010 ANSYS, Inc. All rights reserved.

ANSYS, Inc. Proprietary

Estimate of Maximum Flame Temperature: Pre-collapse open pool fire (cont.)

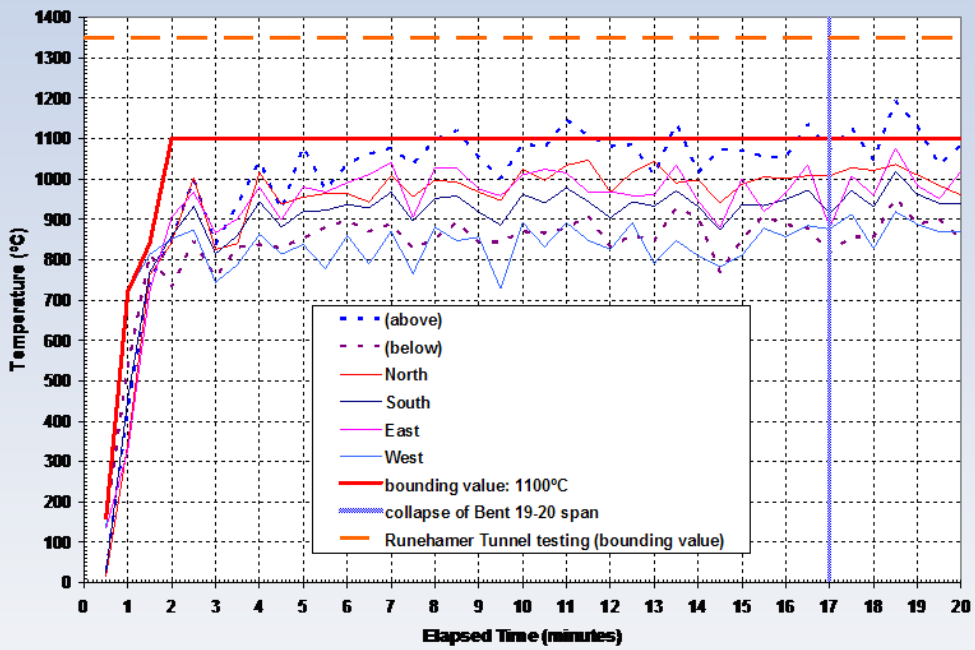

- **Based on Runehamar Tunnel tests, and NFPA 502, *Standard for Road Tunnels, Bridges, and Other Limited Access Highways,* 2008 Edition, the upper temperature limit for confined but fully oxygenated fires is about 1350ºC (2462ºF)**
- **Preliminary analysis with the Fire Dynamics Simulator (FDS) code predicted conservative estimates of 1320ºC (2408ºF) for the maximum temperature in the pool fire**
- **Refinement of the model to account more precisely for specific features of the MacArthur Maze fire yielded results that are conservatively bounded by a uniform temperature of 1100ºC (2012ºF)**

© 2010 ANSYS, Inc. All rights reserved.

ANSYS, Inc. Proprietary

Estimate of Maximum Flame Temperature: Post-collapse open pool fire

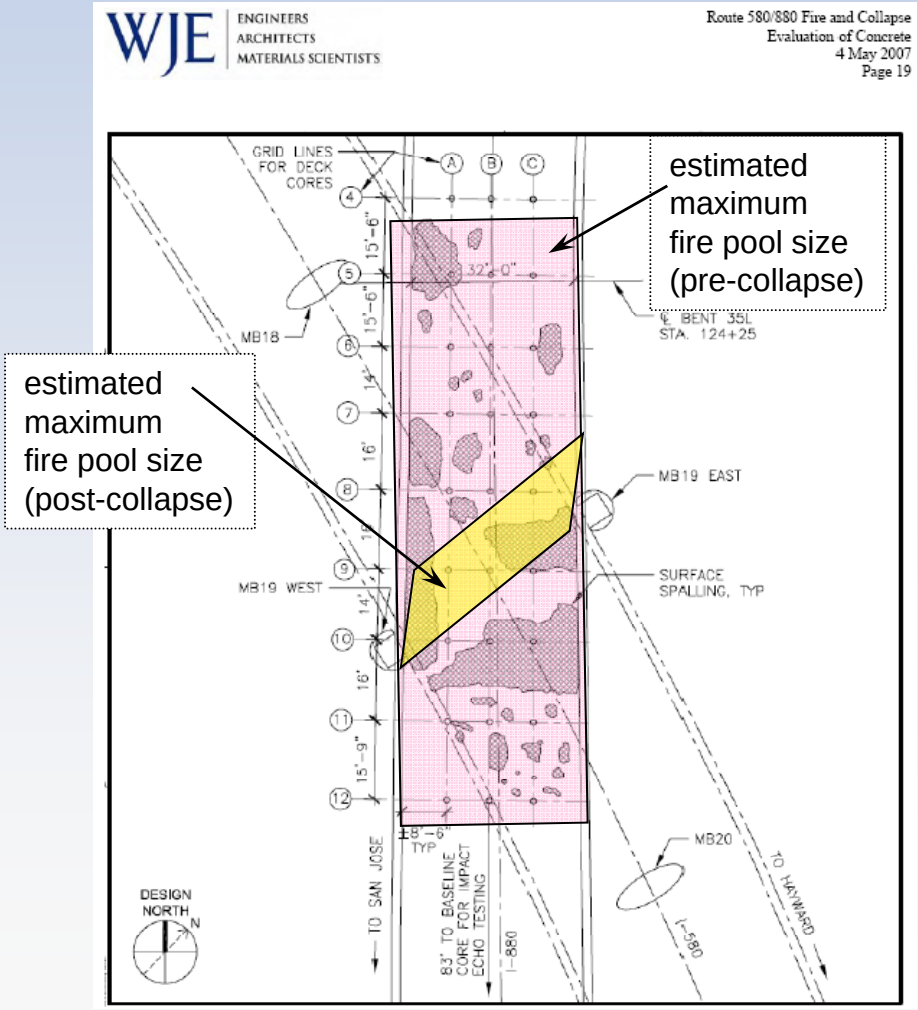

- **Based on the fire video and post-fire configuration of collapsed roadway, maximum fire pool size post-collapse is estimated as 504 ft^2 (47 m^2)**
- **Post-collapse fire pool is ~18% of the size of the maximum estimated pre-collapse fire pool**
- **The fractured end of the Bent 18-19 span intruded into the post-collapse fire, absorbing heat and possibly lowering the temperature significantly, compared to an unobstructed open pool fire of the same size**
- **Smaller, partially engulfing open-pool hydrocarbon fires can be characterized with a uniform flame temperature of approximately 800-900ºC (1472-1652ºF)**

© 2010 ANSYS, Inc. All rights reserved.

ANSYS, Inc. Proprietary

Temperature Boundary Conditions for MacArthur Maze Fire Scenario

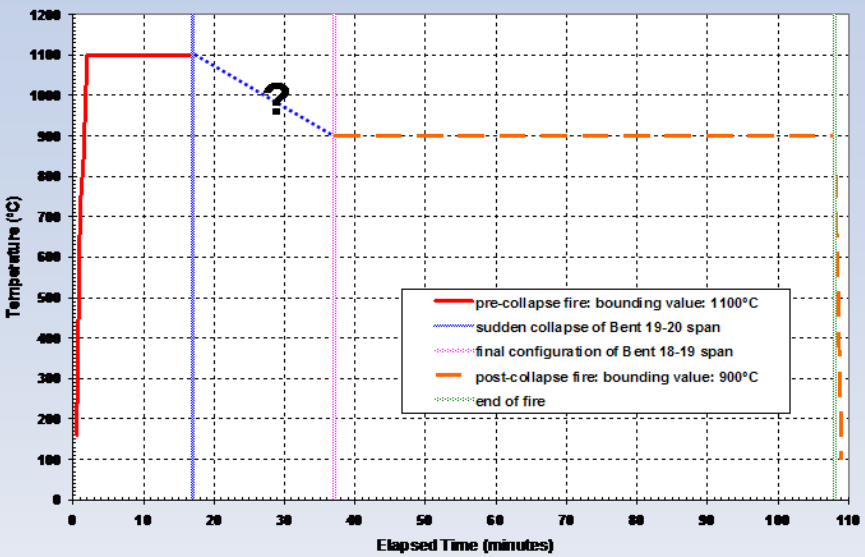

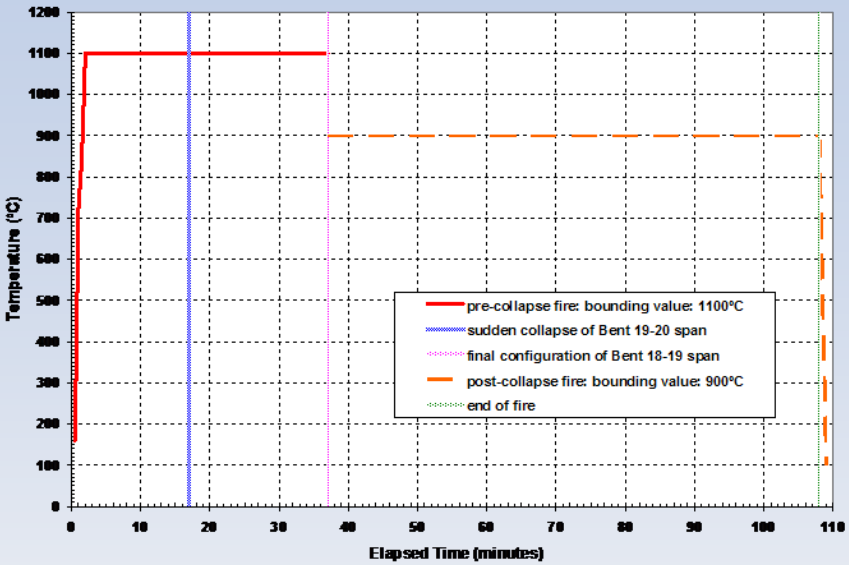

- **Pre-collapse fire (0-17 minutes) modeled as fully engulfing fire with uniform temperature 1100ºC (2012ºF), 0.9 emissivity**
- **Fire gas temperatures during collapse of Bent 18-19 span cannot be as high as attainable in an unconstrained open pool fire**
  - Transition from large pool to small pool fire conservatively bounded by extending fully engulfing fire at 1100ºC (2012ºF) to 37 minutes
- **Post-collapse fire (37-108 minutes) modeled as fully engulfing fire with uniform temperature 900ºC (1652ºF), 0.9 emissivity**

© 2010 ANSYS, Inc. All rights reserved.

ANSYS, Inc. Proprietary

Just How Bad is the MacArthur Maze Fire?

Comparisons with previous accidents: Baltimore Tunnel Fire (BTF) in 2001 and Caldecott Tunnel Fire (CTF) in 1982

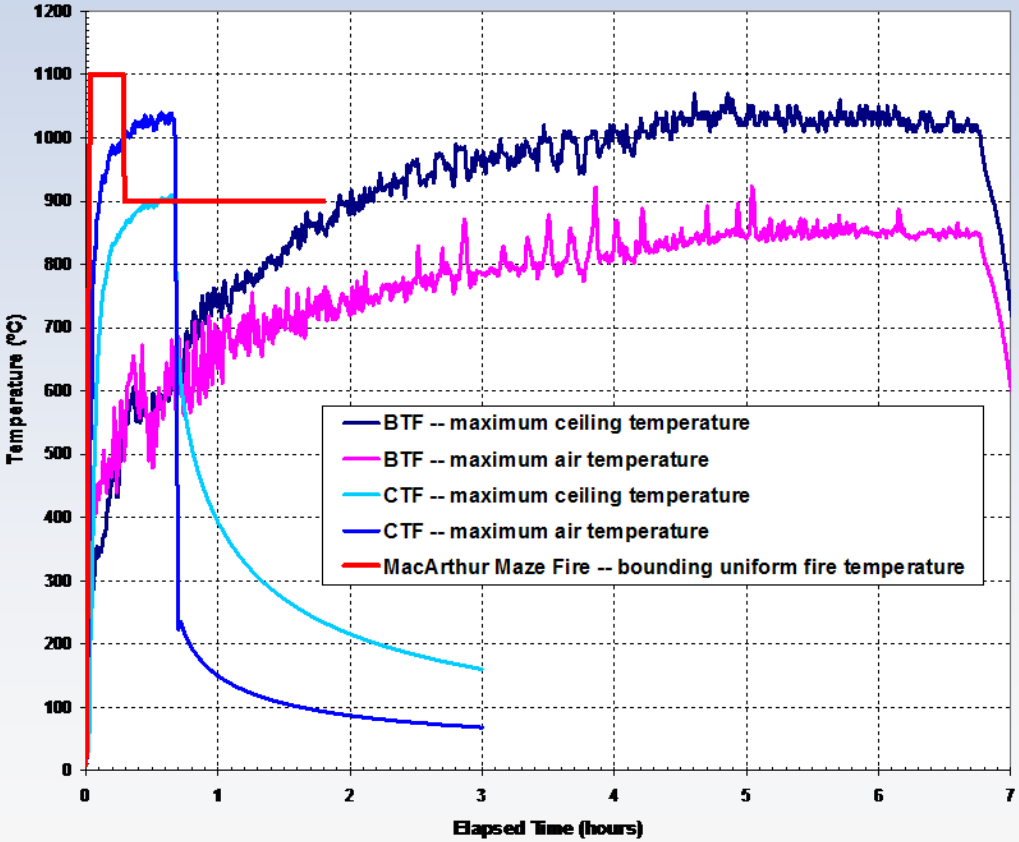

- **Fire temperature:**
  - large pre-collapse open pool fire is hotter than BTF and CTF (1100ºC vs. 1070ºC and 1040ºC)
  - smaller post-collapse fire is not as hot as the tunnel fires (900ºC vs. 1070ºC and 1040ºC)
- **Fire duration:**
  - ~2.7 times longer than CTF (108 min. vs. 40 min.)
    - Hotter large pool fire only about half as long as CTF (17 min. vs. 40 min.)
  - ~0.27 times duration of BTF (108 min. vs. 406 min.)
- **What's special about the MM fire?**
  - potential structural consequences of impact of collapsing overhead span on SNF package
  - potential thermal consequences due to SNF package buried under concrete slab

© 2010 ANSYS, Inc. All rights reserved.

ANSYS, Inc. Proprietary

Modeling Effects of MM Fire on an SNF Truck Transportation Package

- **General Atomics GA-4 package selected for analysis**
  - Relatively high capacity Legal Weight Truck package
- **LS-DYNA model of bridge structure created to simulate collapse of I-580 overhead span between Bent 19 and Bent 20**
- **ANSYS model of GA-4 package developed to simulate structural and thermal response of cask to fire conditions**
- **COBRA-SFS model of GA-4 package developed to simulate thermal response to fire conditions, including effect of concrete over cask during post-collapse fire and post-fire cooldown**

© 2010 ANSYS, Inc. All rights reserved.

ANSYS, Inc. Proprietary

GA-4 Legal Weight Truck Transportation Package

- **GA-4 package is designed to transport**
  - up to 4 intact PWR 14x14 or 15x15 spent fuel assemblies

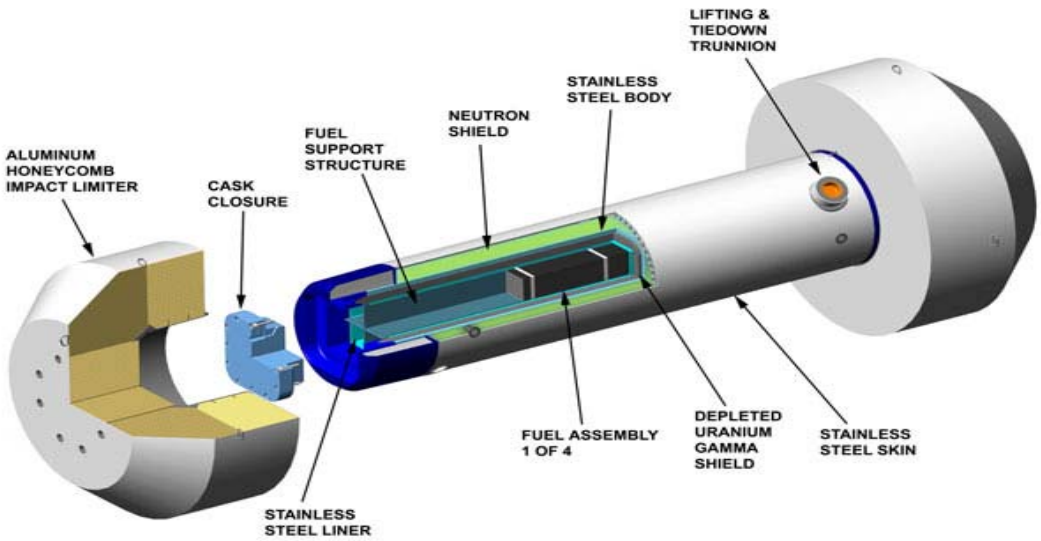

Figure courtesy of General Atomics

- **Package Heat Load**
  - **2.468 kW Decay heat**
  - **0.617 kW/assembly**
- **Average Fuel Burnup**
  - **35 GWd/MTU (10-yr cooled)**
  - **45 GWd/MTU (15-yr cooled)**

- **Stainless steel cask body, with**
  - depleted uranium gamma shield
  - propylene glycol/water mixture for neutron shield
  - gross wt. 55,000 lb (25,000 kg)

© 2010 ANSYS, Inc. All rights reserved.

ANSYS, Inc. Proprietary

Possible Locations of GA-4 SNF Package in Fire Scenario

Scale for visualization:

12 m (roadway width)

SNF package with impact limiters:
- 6 m long
- 2.3 m diameter

SNF package without impact limiters:
- 4.8 m long
- 1 m diameter

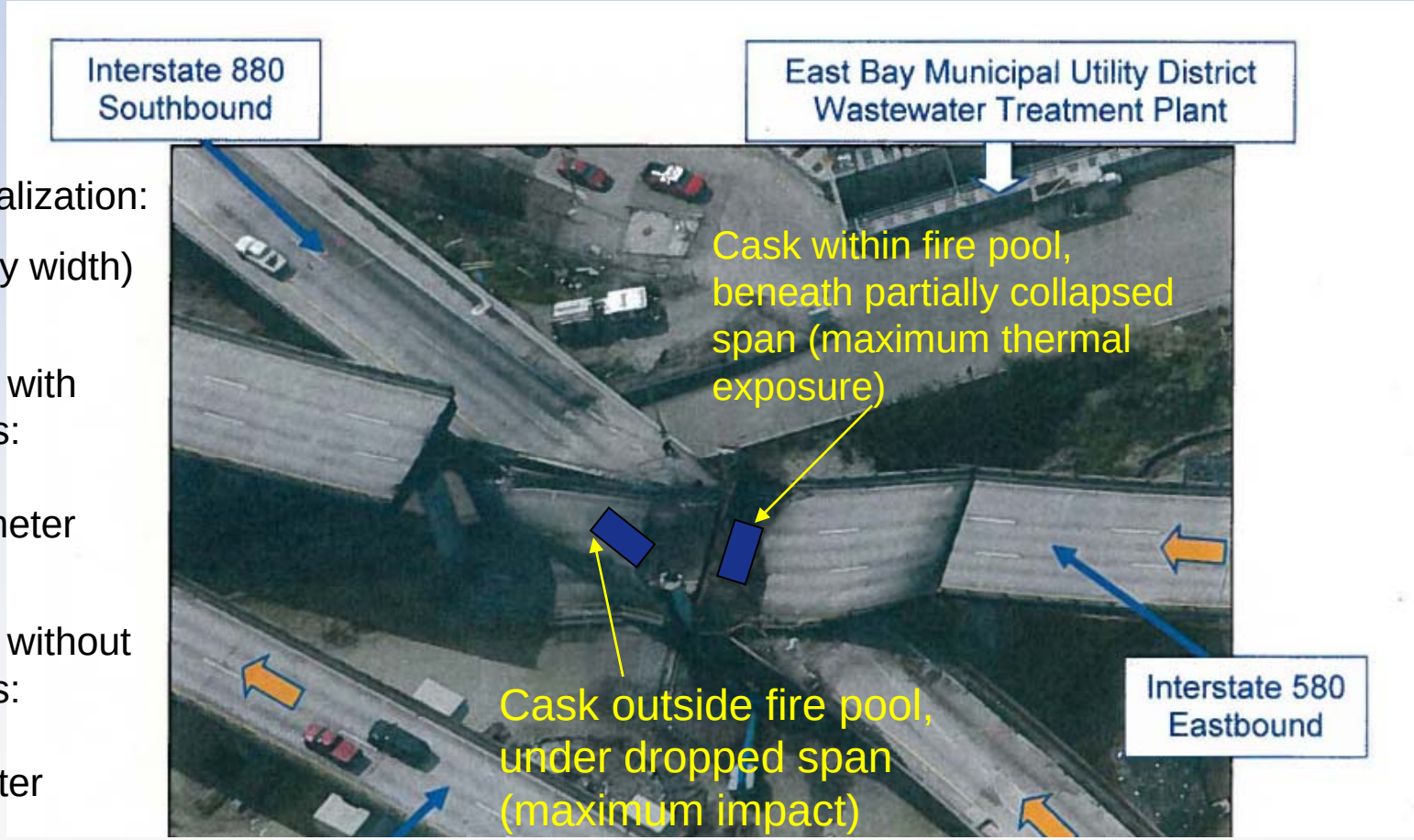

© 2010 ANSYS, Inc. All rights reserved.

ANSYS, Inc. Proprietary

Possible Fire Scenarios for GA-4 SNF Package in MM Fire

- **Cask within fire pool, beneath partially collapsed Bent 18-19 span**
  - most severe thermal exposure for SNF package
  - Cask would experience weight of overhead span, but not a sudden severe impact, since Bent 18-19 span descended slowly to lower roadway at Bent 19 end
  - Final configuration of upper roadway on cask would cover only top of cask; sides would be exposed to open air in post-fire conditions
- **Cask beneath Bent 19-20 span, possibly outside fire pool**
  - Thermal exposure to fire lasts only 17 minutes
    - Cask may not be fully engulfed by fire
  - Cask would receive sudden severe impact due to collapse of Bent 19-20 span
  - Final configuration of upper roadway on cask would entirely blanket cask

© 2010 ANSYS, Inc. All rights reserved.

ANSYS, Inc. Proprietary

‘Most Limiting’ Fire Scenario for Analysis of GA-4 SNF Package

- **For maximum thermal exposure to the fire, the cask must be within the fire pool, beneath the Bent 18-19 span**
- **For maximum structural insult and ‘worst case’ post-fire cooldown conditions, the cask must be outside the fire pool, beneath the Bent 19-20 span**
- **The ‘most limiting’ scenario for the thermal response of the cask can be obtained by combining these two scenarios, such that the cask is subjected to**
  - 17 minutes of exposure to a fully engulfing fire at 1100ºC (2012ºF) to simulate the pre-collapse portion of the fire
  - An additional 20 minutes of exposure to a fully engulfing fire at 1100ºC (2012ºF) to conservatively bound the fire temperature as the fire size is reduced by the collapse of the overhead spans

© 2010 ANSYS, Inc. All rights reserved.

ANSYS, Inc. Proprietary

'Most Limiting' Fire Scenario for Thermal Response of GA-4 SNF Package to MacArthur Maze Fire, cont.

- From 37 minutes to end of fire at 108 minutes, assume complete 'blanketing' of cask by fallen roadway, in a configuration that could actually have occurred only under the fully collapsed span between Bent 19 and Bent 20
  - Fire temperature reduced to uniform bounding value of 1652ºF (900ºC)
  - Assume cask remains fully engulfed by fire (at the reduced temperature), and the enclosing concrete also is exposed to gas at the fire temperature
- after 108 minutes, assume cask remains covered by overhead roadway, cooled only by free convection to still air (including thermal radiation exchange) from exposed roadway surfaces

© 2010 ANSYS, Inc. All rights reserved.

ANSYS, Inc. Proprietary

The MacArthur Maze Post-fire Configuration

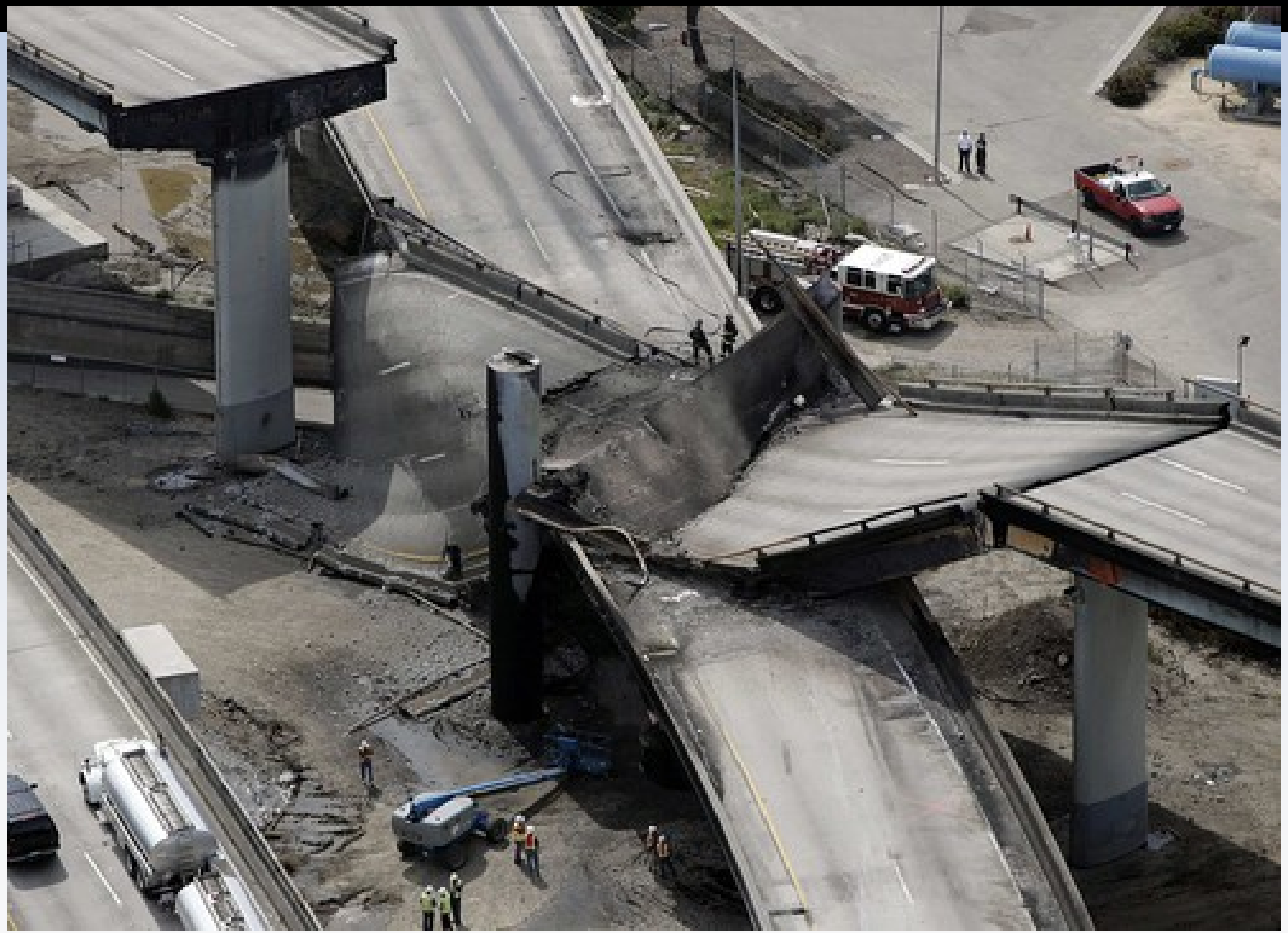

© 2010 ANSYS, Inc. All rights reserved.

ANSYS, Inc. Proprietary

Diagram of COBRA-SFS Model of SNF Package Beneath Collapsed I-580 Span

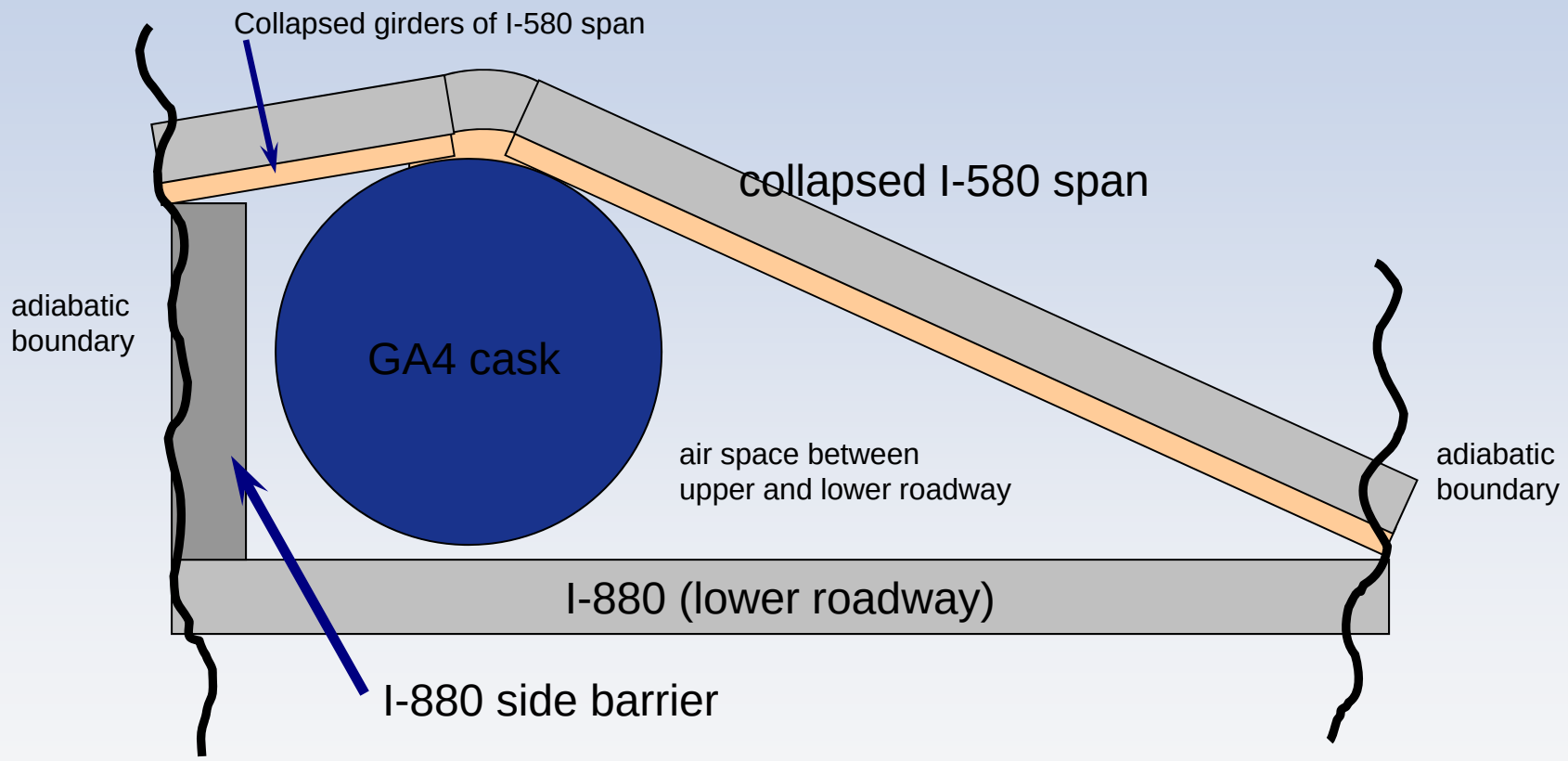

© 2010 ANSYS, Inc. All rights reserved.

ANSYS, Inc. Proprietary

Structural Analysis Geometry

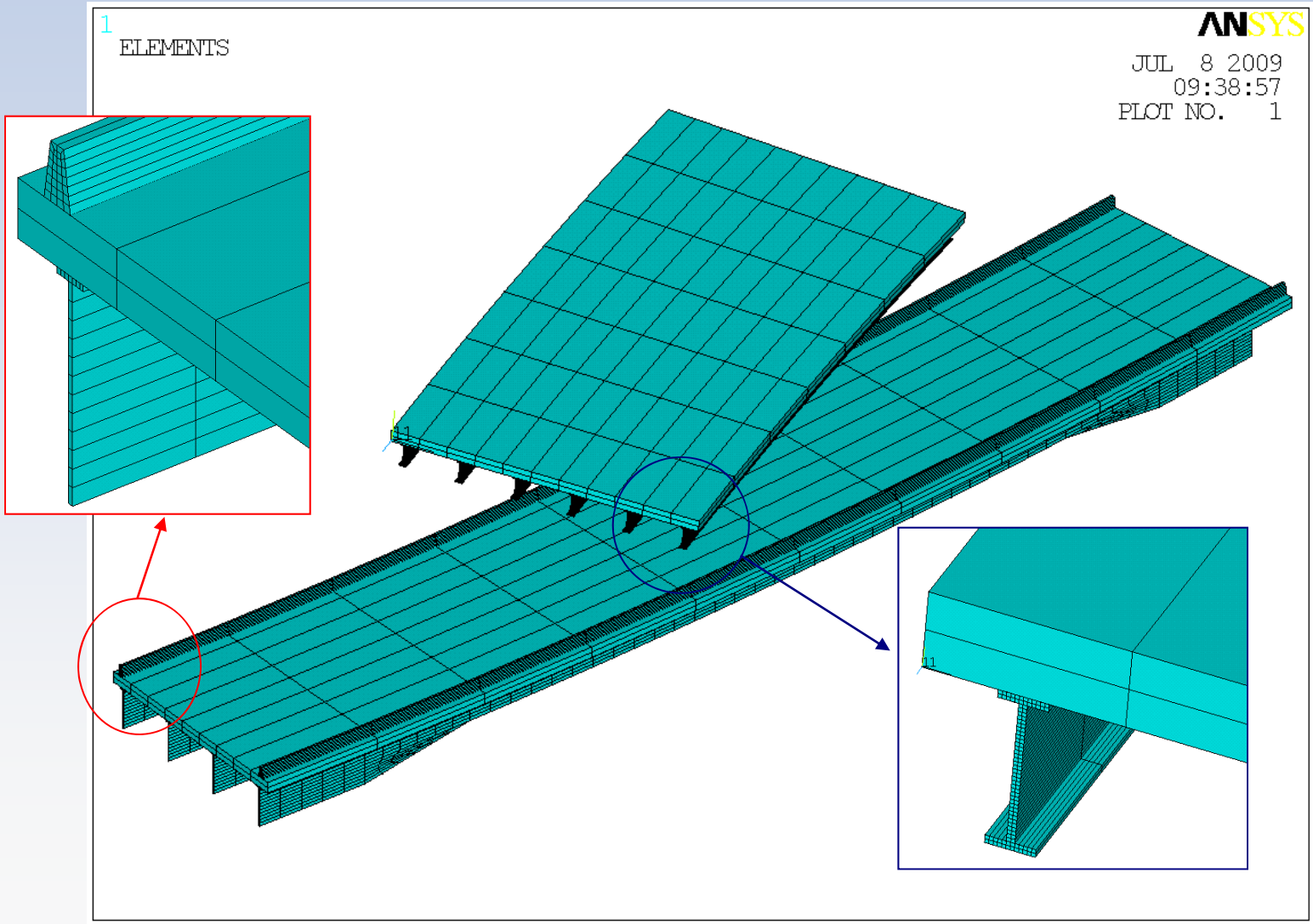

© 2010 ANSYS, Inc. All rights reserved.

ANSYS, Inc. Proprietary

Structural Impact of Overpass Collapse on SNF Package

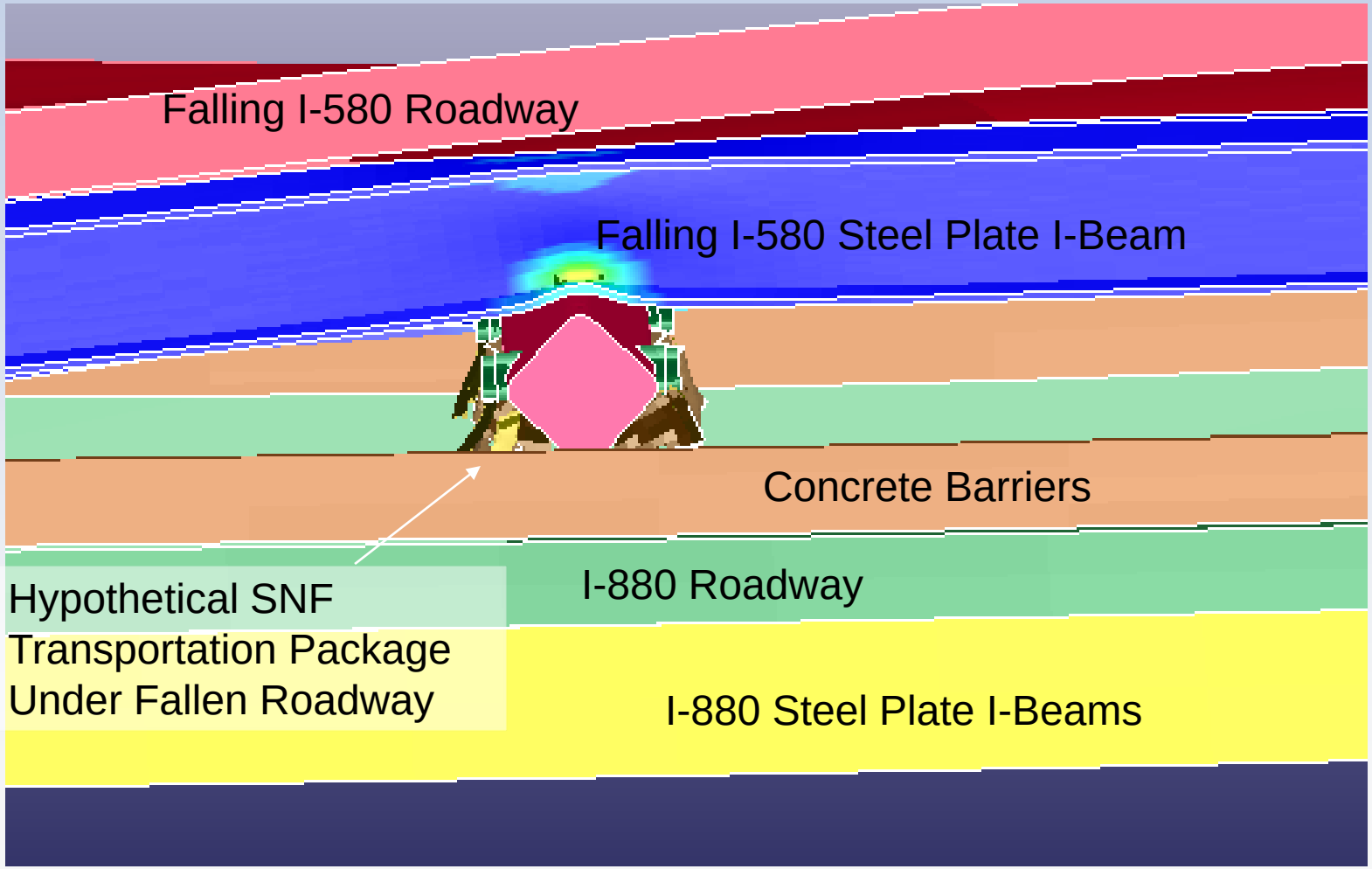

© 2010 ANSYS, Inc. All rights reserved.

ANSYS, Inc. Proprietary

ANSYS Thermal Model of GA-4

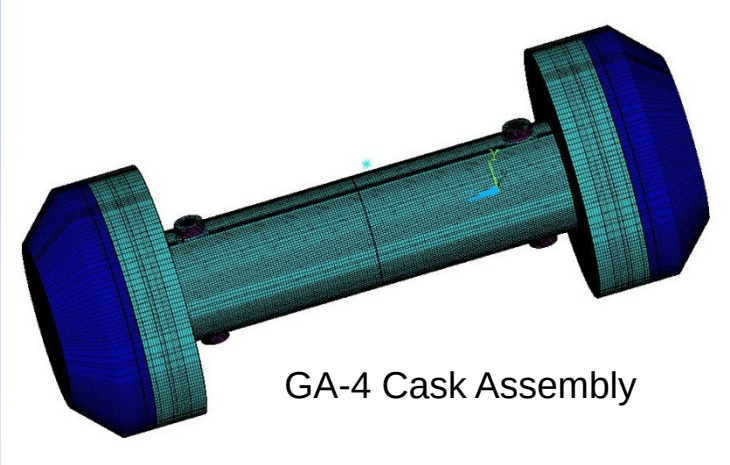

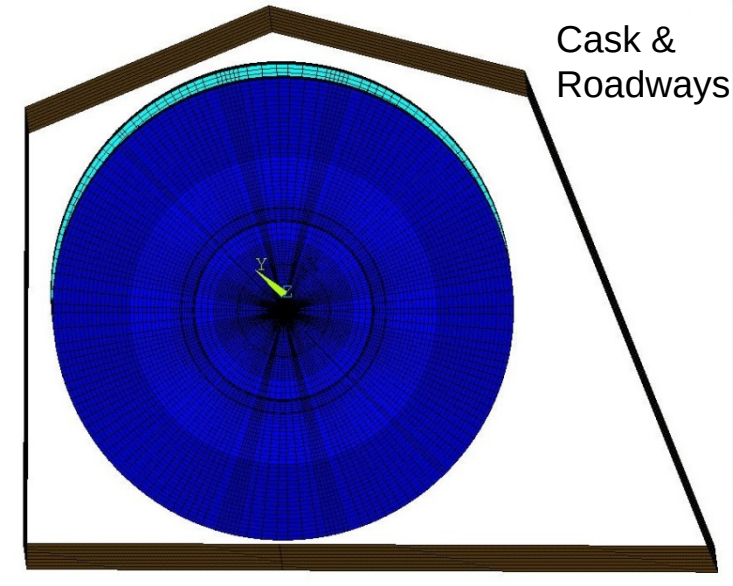

- **Detailed 3-D representation of cask, trunnions, impact limiters, closure assembly, and surrounding geometry such as upper and lower roadways.**

- **Total Nodes = 1907044**
- **Total Elements = 2183490**
  - 1851067 Solid70's
  - 45240 Shell57's
  - 761 Link33's
  - 25331 Conta173's
  - 27893 Targe170's
  - 232980 Surf152's
  - 218 Matrix50's

© 2010 ANSYS, Inc. All rights reserved.

ANSYS, Inc. Proprietary

GA-4 Package Model

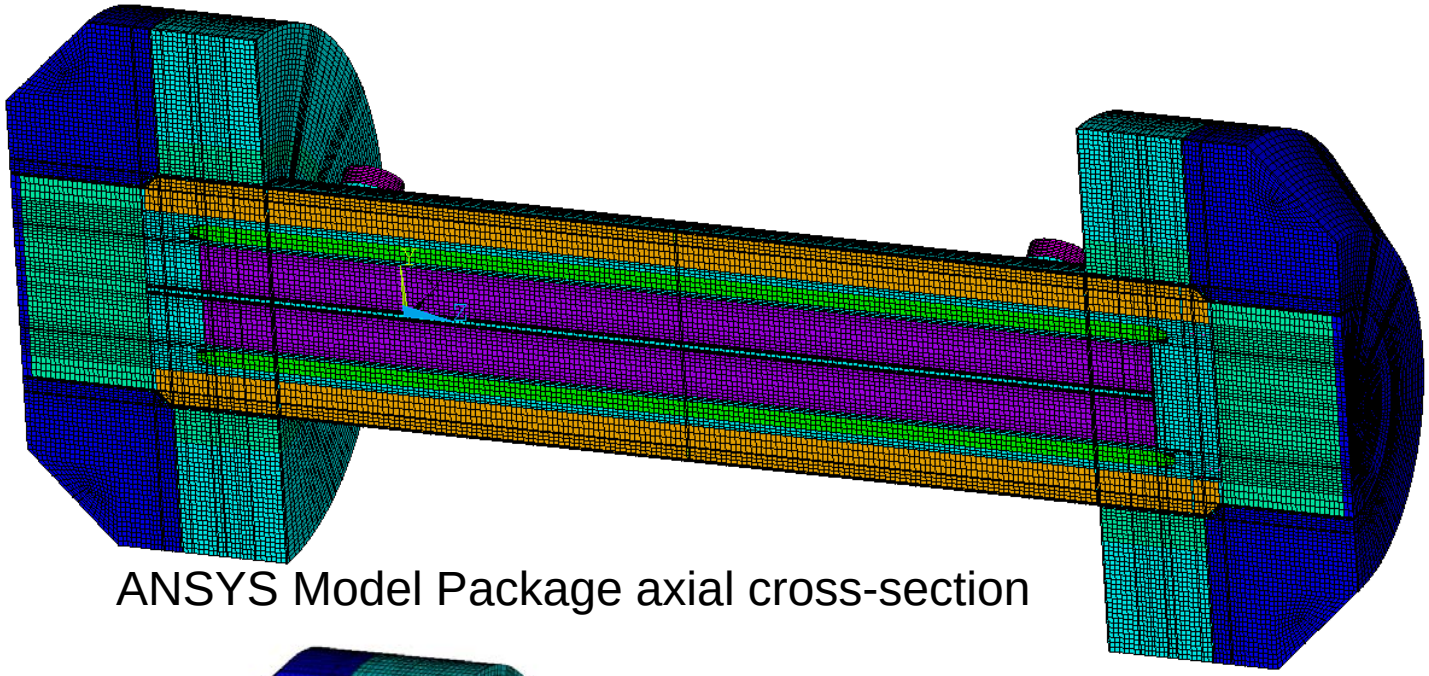

ANSYS Model Package axial cross-section

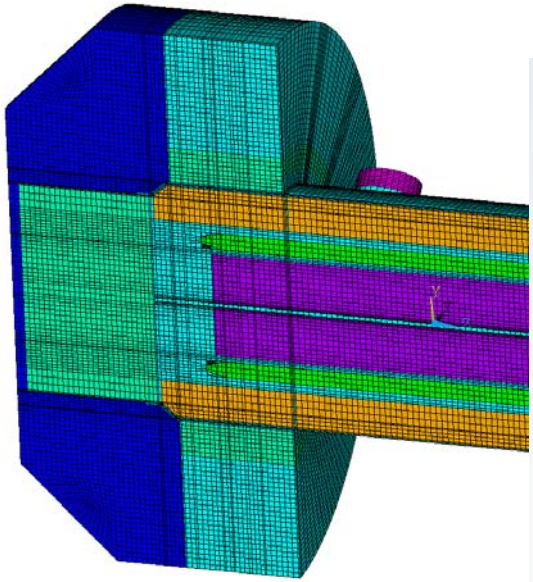

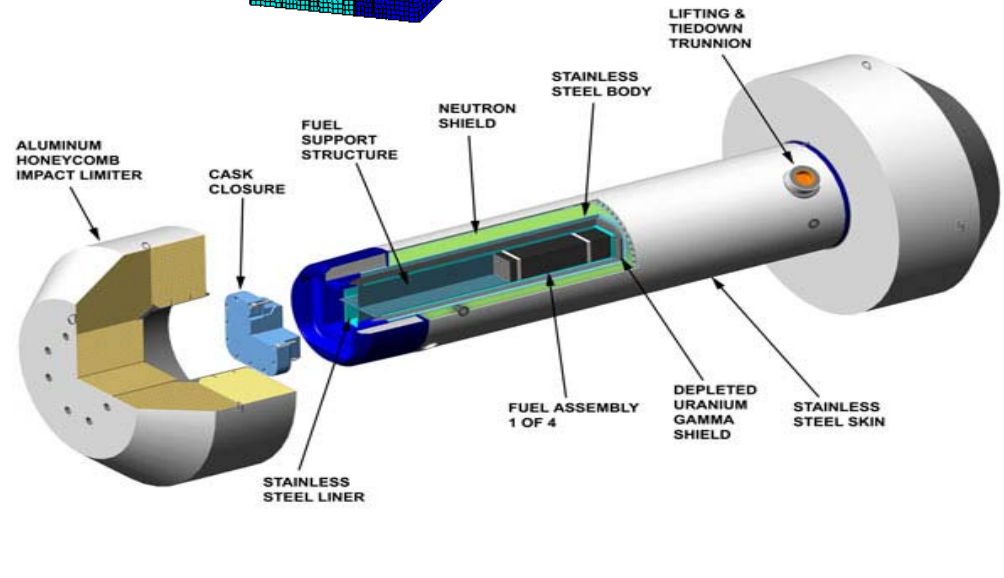

© 2010 ANSYS, Inc. All rights reserved.

ANSYS, Inc. Proprietary

ANSYS Model of GA-4 Cask: Basic Geometry

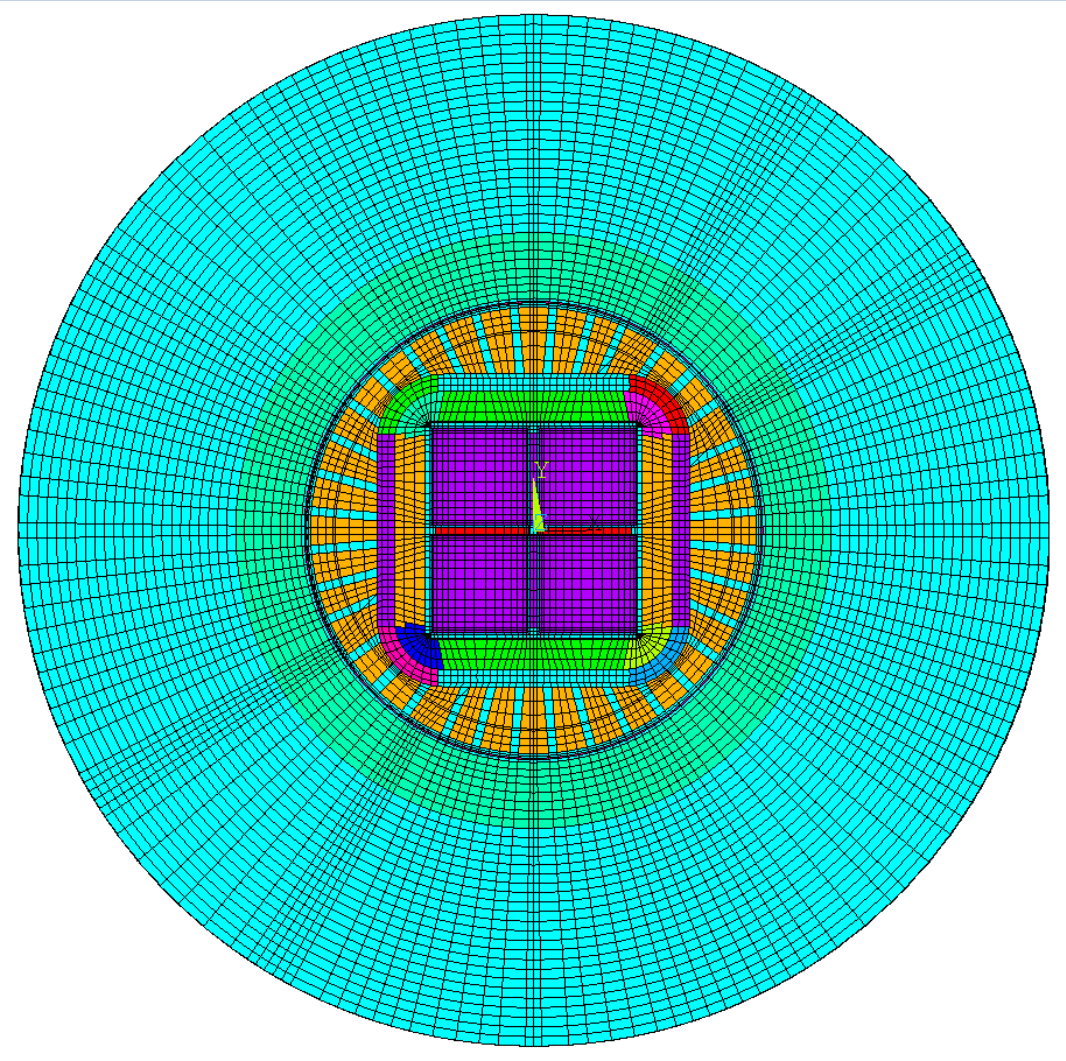

Package cross-section Impact Limiters & Cask

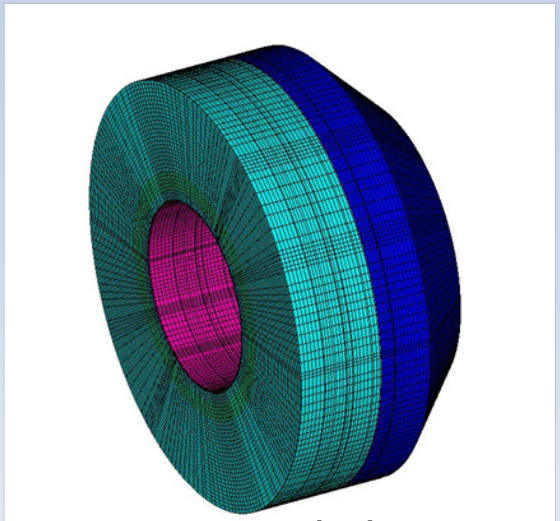

Impact Limiter

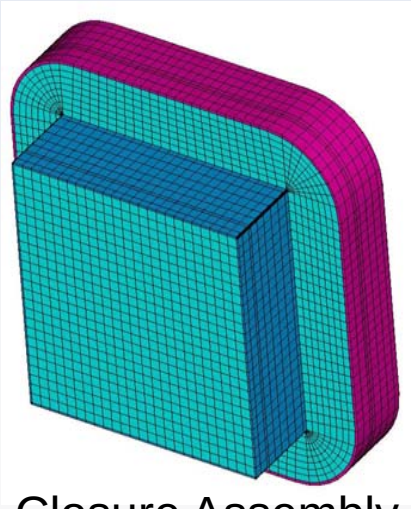

Closure Assembly

© 2010 ANSYS, Inc. All rights reserved.

ANSYS, Inc. Proprietary

ANSYS Model of GA-4 Cask: Internal Geometry Details

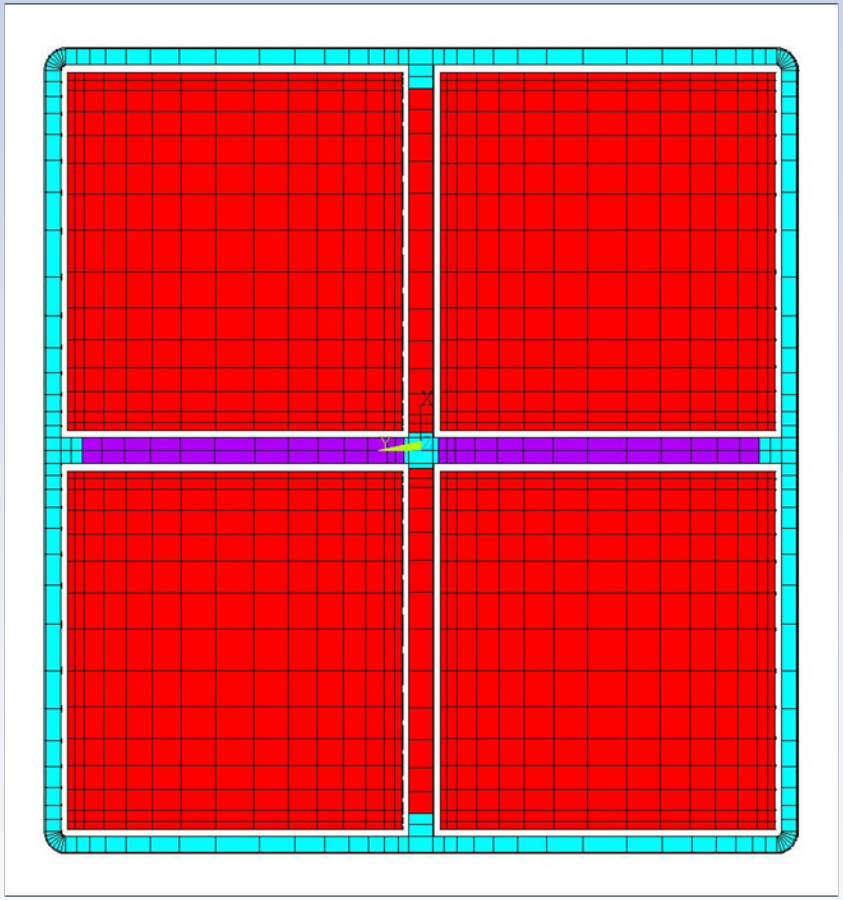

Fuel Assembly and Basket Structure

- **Four fuel assemblies**
  - Effective properties calculated and applied to active fuel region
    - Keff model previously developed for fuel (benchmarked with experimental data)
- **Helium gap modeled with Solid70 elements**
  - Radiation across the gap is modeled with Matrix50 elements
  - Assume convection across the gap is negligible
- **Fuel support structure (FSS)**
  - Composed of boron carbide pellets sandwiched between stainless steel plates
  - Modeled as a single solid material (Solid70) and the effective properties for the region calculated
- **Fuel and FSS are surrounded by a stainless steel basket**

© 2010 ANSYS, Inc. All rights reserved.

ANSYS, Inc. Proprietary

Neutron Shield

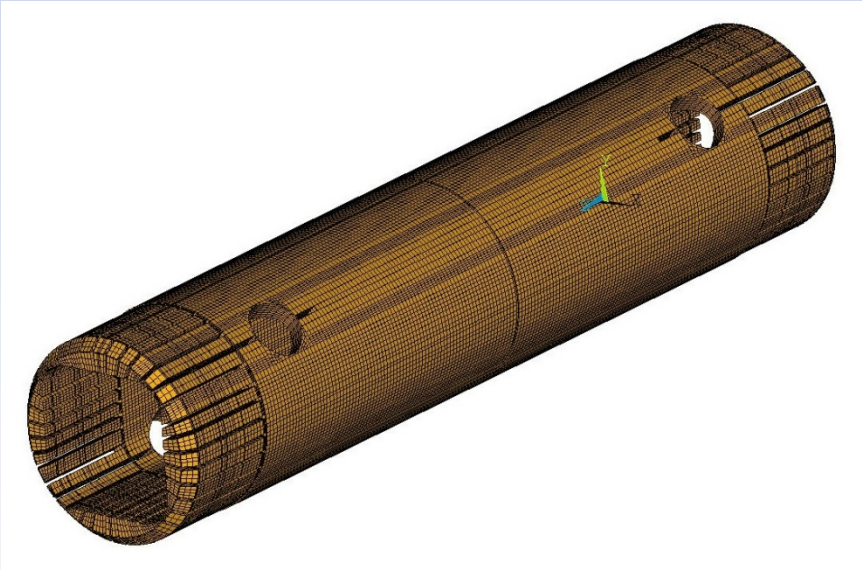

- **Initially filled with liquid**
- **Modeled with Solid70 elements**
- **Assume conduction and convection heat transfer**
  - Calculate a effective conductivity based on correlation for concentric cylinders.
    - Re-calculate after each iteration
- **Assume it "ruptures" when the average temperature exceeds 276 F (135.6 C)**
  - Liquid with in the neutron shield is assumed to have vaporized and been replaced by air
    - Turn "on" Matrix50 radiation elements (KEYOPT,x,2,1)

© 2010 ANSYS, Inc. All rights reserved.

ANSYS, Inc. Proprietary

Pre-Fire Analysis Conditions

- **Equivalent to Normal Conditions of Transportation (NCT) in 10 CFR 71.71**
  - Ambient temperature 38°C (100°F)
- **Heat Generation Across the Fuel Assembly**
  - Volumetric heat generation of 617 W for each fuel assembly
  - Active fuel split into 16 zones
  - Peaking factor based on axial profile applied to each zone as a body force (BFE)
- **Solar Loads**
  - Solar heat generation rate based on surface geometry (BFE)
  - Surface Absorptivity
    - Cask = 0.4
    - Impact Limiters = 0.6
- **Surface Emissivities**
  - Cask = 0.15
  - Impact Limiters = 0.85
- **External Convection**
  - Natural convection correlations based on surface geometry
    - Re-calculate after each iteration
  - Applied as a surface force (SFE)

© 2010 ANSYS, Inc. All rights reserved.

ANSYS, Inc. Proprietary

Modeling Results: GA4 Package for Normal Conditions of Transport (NCT)— 38ºC (100ºF), with insolation

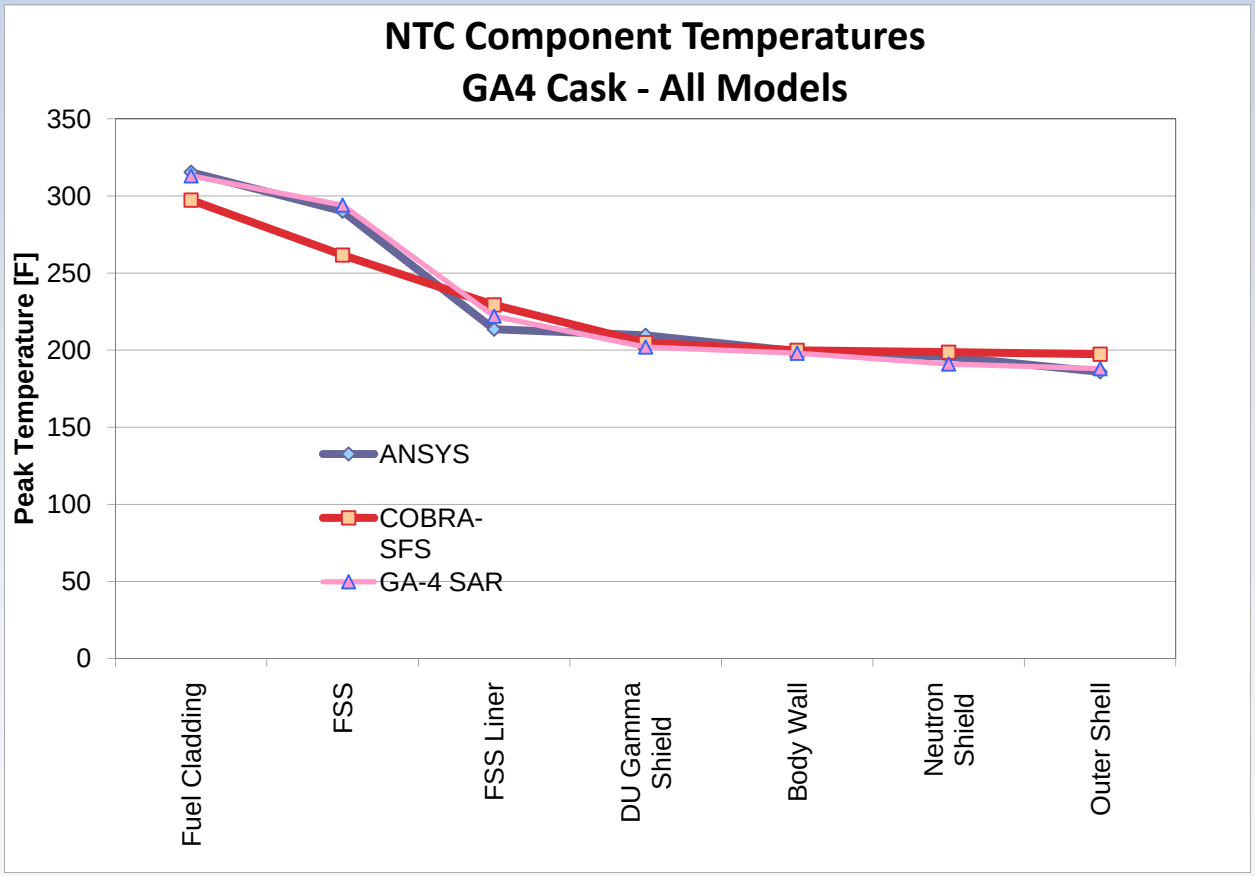

- **Peak clad temperature predictions are**
  - 156ºC (313ºF) from SAR
  - 157ºC (315ºF) from ANSYS model (with impact limiters)
  - 148ºC (298ºF) from COBRA-SFS model (without impact limiters)
- **Differences in results are small, and consistent with known differences in modeling approaches**

© 2010 ANSYS, Inc. All rights reserved.

ANSYS, Inc. Proprietary

Hypothetical Accident Conditions (HAC) Fire Analysis Conditions

- **Equivalent to Hypothetical Accident Conditions of Transportation (HAC) in 10 CFR 71.73**
  - Package subjected to a fully engulfing fire with an average flame temperature of 800°C (1475°F) for 30 minutes
- **Initial conditions based on results of NTC**
- **30 minute fire conditions**
  - Ambient temperature of 1475°F
  - Close the “gaps” within the cask assembly
  - Surface absorptivity of outer surfaces = 1.0
  - Surface emissivities of outer surfaces = 0.9
  - External Convection
    - Forced convection coefficient = 2.0 BTU/hr-ft^2-°F
- **Post fire conditions**
  - Ambient temperature of 38°C (100°F)
  - Account for “melted” aluminum within impact limiters
  - Open the “gaps” within the cask assembly
  - External Convection
    - Natural convection correlations based on surface geometry

© 2010 ANSYS, Inc. All rights reserved.

ANSYS, Inc. Proprietary

Model Results for GA4 Package in Regulatory HAC Fire— 800ºC (1472ºF) fully engulfing pool fire

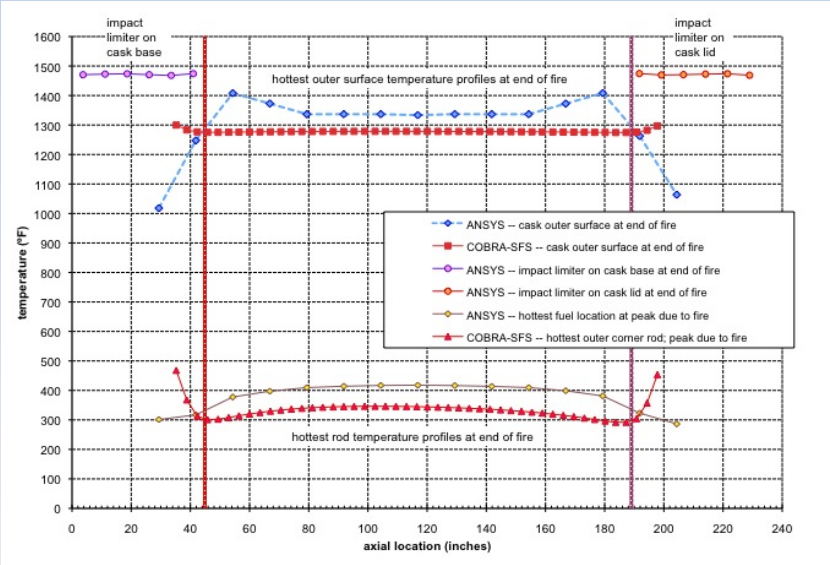

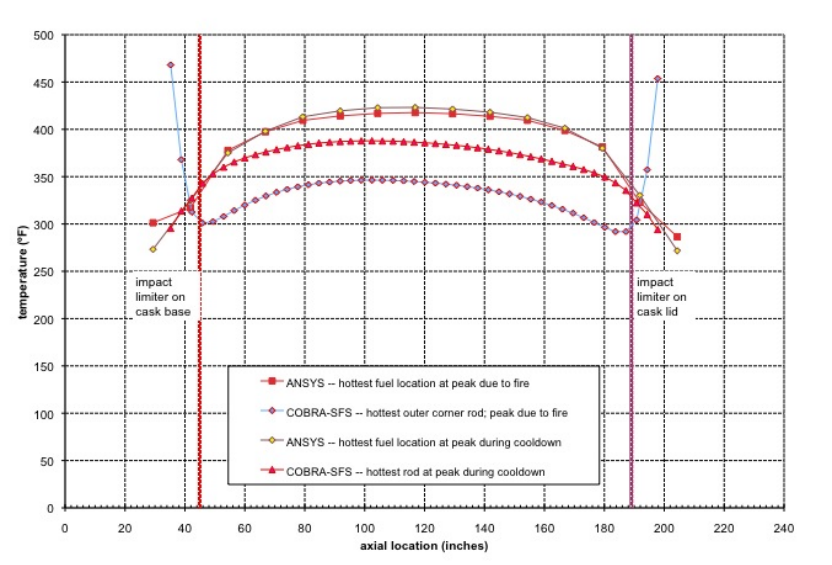

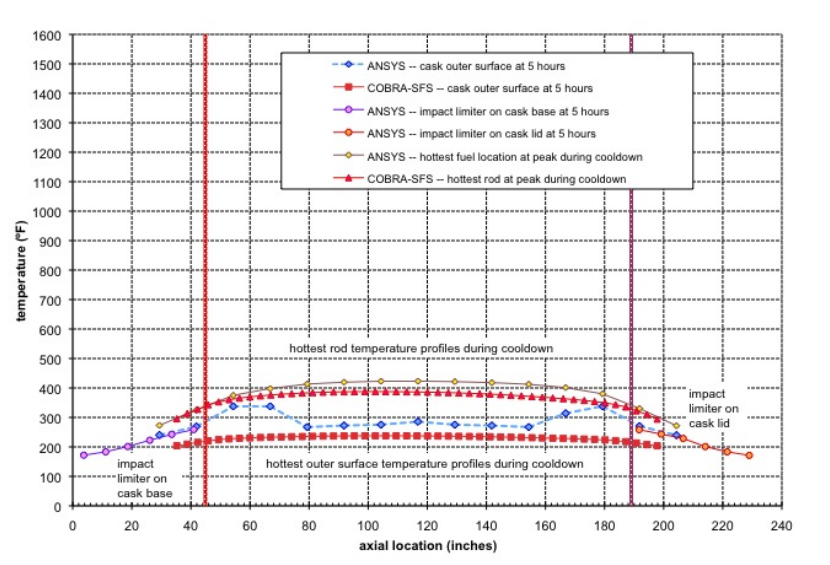

- **Axial Profile Plots**
  - Comparison of ANSYS and COBRA-SFS models
    - ANSYS model included detailed 3-D representation of cask geometry, including impact limiters and trunnions
    - COBRA-SFS model excludes the impact limiters, but has a detailed fuel assembly model with resolution down to the pin level

© 2010 ANSYS, Inc. All rights reserved.

ANSYS, Inc. Proprietary

Model Results for GA4 Package in Regulatory HAC Fire— 800ºC (1472ºF) fully engulfing pool fire

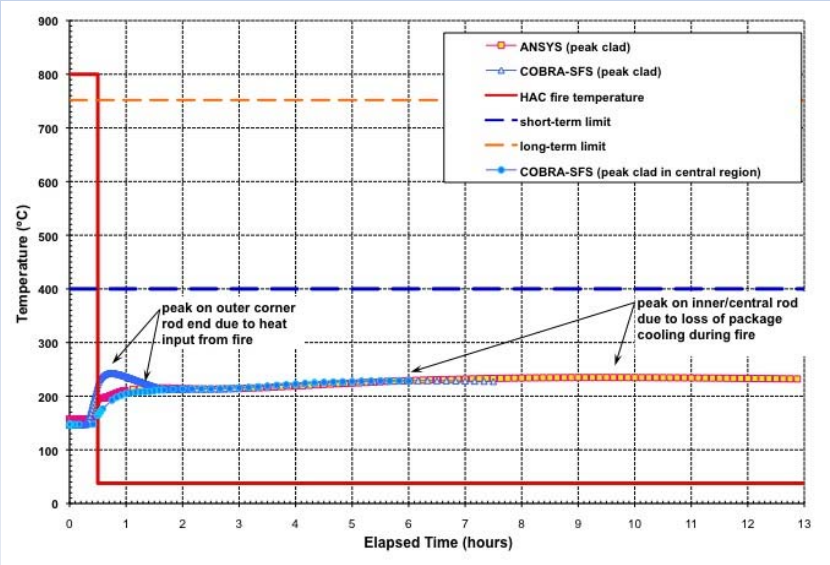

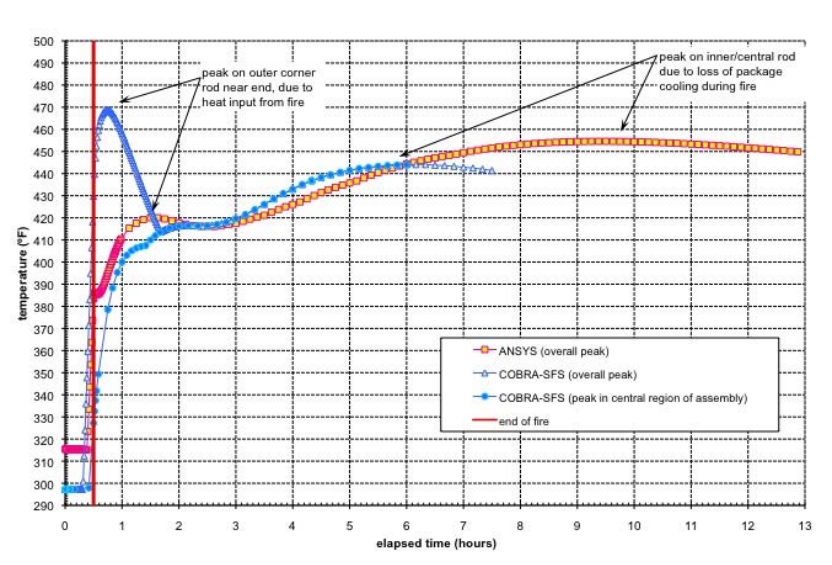

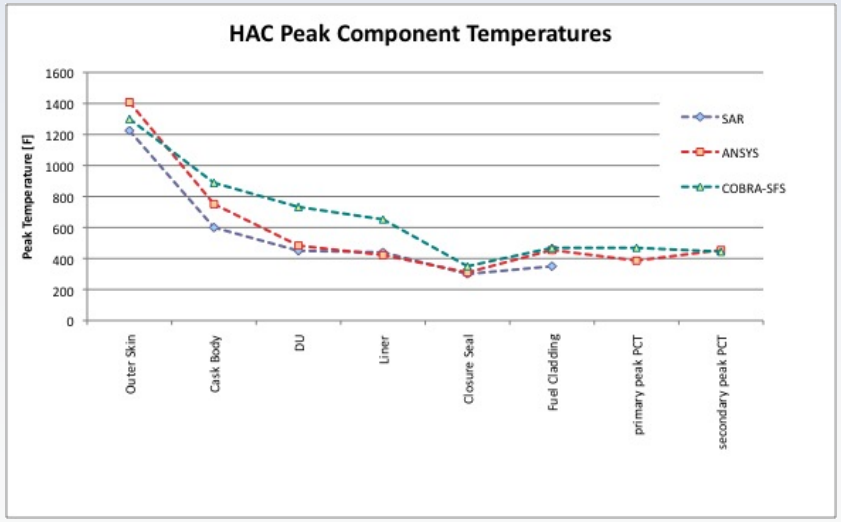

- **Predicted peak cladding temperature**
  - 243ºC (469ºF) with COBRA-SFS
  - 235ºC (455ºF) with ANSYS
- **Regulatory HAC fire is not a serious challenge to GA-4 cask, due to**
  - extremely low decay heat (2.468 kW)
  - Limited number of assemblies (4/cask)
  - low peak clad temperature for NCT ~157ºC (~315ºF)

© 2010 ANSYS, Inc. All rights reserved.

ANSYS, Inc. Proprietary

Next Steps: MM Fire Scenario Thermal Boundary Conditions

Boundary Conditions	Elapsed time (minutes)
Fully engulfing fire (uniform flame temperature 1100ºC)	0 to 37 minutes
Capped by concrete and steel of upper roadway; fully engulfed by fire at 900ºC, - enclosing concrete also exposed to fire gas - free convection plus thermal radiation to external ambient of 38ºC beyond exposed roadway surfaces	37 to 108 minutes
Capped by concrete and steel of upper roadway; fire extinguished, free convection plus thermal radiation to external ambient of 38ºC beyond exposed roadway surfaces	beyond 108 minutes

© 2010 ANSYS, Inc. All rights reserved.

ANSYS, Inc. Proprietary

Communications

- **Reports (NUREG/CR)**
  - Materials analyses (NUREG/CR 6987)
    - http://www.nrc.gov/reading-rm/doc-collections/nuregs/contract/cr6987
  - Fire model and transportation package response report
    - MacArthur Maze

© 2010 ANSYS, Inc. All rights reserved.

ANSYS, Inc. Proprietary

Acknowledgements

- California Department of Transportation
- California Highway Patrol
- Pacific Northwest National Laboratory
- Center for Nuclear Waste Regulatory Analysis
- National Institute of Standards and Technology

© 2010 ANSYS, Inc. All rights reserved.

ANSYS, Inc. Proprietary

© 2010 ANSYS, Inc. All rights reserved.

ANSYS, Inc. Proprietary