ATTACHMENT

PEACH BOTTOM ATOMIC POWER STATION
UNITS 2 AND 3

NRC Docket Nos. 50-277 and 50-278

Renewed Facility Operating License Nos.
DPR-44 and DPR-56

Calculation PM-0375, Revision 4, *"To Establish Limiting Demand for N_2 for the CAD System and the SGIG System for Dual Unit Operation"*

ATTACHMENT 1
Design Analysis Major Revision Cover Sheet

Design Analysis (Major Revision)		**Last Page No.** [6] Attachment II page 9	
Analysis No.: [1]	PM-0375	**Revision:** [2]	4
Title: [3]	To establish limiting demand for N_2 for the CAD system and the SGIG system for dual unit operation		
EC/ECR No.: [4]	09-00416	**Revision:** [5]	0

		Component(s): [14]	
Station(s): [7]	Peach Bottom		
Unit No.: [8]	2 & 3	00T116	
Discipline: [9]	Mechanical		
Descrip. Code/Keyword: [10]	N/A		
Safety/QA Class: [11]	Q, Safety		
System Code: [12]	07C, 16, 912		
Structure: [13]	N/A		

CONTROLLED DOCUMENT REFERENCES [15]

Document No.:	From/To	Document No.:	From/To
PM-0374	From	PM-0804	To
PM-0386	From	SR 3.6.1.3.1	To
PE-0063	From	SR 3.6.1.5.1	To
		SR 3.6.3.1.2	To

Is this Design Analysis Safeguards Information? [16] **Yes** ☐ **No** ☒ If yes, see SY-AA-101-106

Does this Design Analysis contain Unverified Assumptions? [17] **Yes** ☐ **No** ☒ If yes, ATI/AR#:

This Design Analysis SUPERCEDES: [18] **N/A** **in its entirety.**

Description of Revision (list affected pages for partials): [19] This revision raises the required amount of nitrogen for seven days of SGIG post-LOCA operation from 49,904.77 SCF to 120,000 SCF. The original 25% margin (9,980.95 SCF) was removed and replaced with 80,422 SCF to account for estimated system leakage. In addition, eight days of leakage through the CAC Vent and Purge Butterfly Valve Stations was replaced with seven days since SGIG is only required for seven days post-LOCA without additional supplies per TSB SR 3.6.1.3.1 and 3.6.1.5.1. As a result, 120,000 SCF of nitrogen is required for 7 days of post-LOCA operation of SGIG and 320,000 SCF for CAD + SGIG. The affected pages of Revision 3 include 3, 3a, 3b, 4, 5, 7, 7a, 11, 14, 16, 16a, 23, 24, and 24a. The leakage estimate has been provided as attachment II and inputs for the estimate are included in ECR 09-00416.

Preparer: [20]	Richard Wagner (Print Name)	Richard Wagner Jr (Sign Name)	11/16/09 (Date)

Method of Review: [21] **Detailed Review** ☒ **Alternate Calculations (attached)** ☐ **Testing** ☐

Reviewer: [22]	Paul Kester (Print Name)	Paul Kester (Sign Name)	11/19/09 (Date)

Review Notes: [23] Independent review ☒ Peer review ☐

(For External Analyses Only)

External Approver: [24]	Print Name	Sign Name	Date
Exelon Reviewer: [25]	Print Name	Sign Name	Date

Independent 3rd Party Review Reqd? [26] **Yes** ☐ **No** ☒

Exelon Approver: [27]	Jeffrey Chizever (Print Name)	J Chizever (Sign Name)	11/20/09 (Date)

1.0 Purpose:

The purpose of this design analysis is to establish the limiting system demand for nitrogen gas from the Containment Atmospheric Dilution (CAD) tank for the combined limiting demand of Safety Grade Instrument Gas (SGIG) and CAD system for dual unit (i.e., for both PBAPS Units 2 & 3) operation.

The design basis for combustible gas control for PBAPS is NEDO-22155 (Reference 28). This evaluation, which was reviewed and approved for PBAPS through Nuclear Regulatory Commission (NRC) letter from John F. Stolz (Chief Operating Reactors Branch (Division of Licensing)) to Edward G. Bauer, Jr., Vice President and General Counsel Philadelphia Electric Company "Recombiner Capability Requirements of 10 CFR 50.44(c)(3)ii," Generic Letter 84-09, dated 6/26/85 (Reference 29), demonstrated that PBAPS does not rely on purge/repressurization system as the primary means of combustible gas control. The evaluation showed that with more realistic, but conservative oxygen generation rates (0.1 molecules/100 ev for 12 hours and 0.003 molecules/100 ev greater than 12 hours), the primary containment oxygen concentration will not reach the 5% limit within 30 days. Therefore, the CAD system is not required to operate. The SER did however, require that the CAD system be maintained as originally designed, therefore, this calculation is maintained to document that the CAD system is capable of meeting the original design basis requirements.

Per PBAPS UFSAR Section 5.2.3.9.4, the CAD system starts operating in about 24 hours (1 day) following a LOCA. PBAPS UFSAR Section 5.2.3.9.3, states that the on-site supply is sufficient to provide at least 7 days of dilution (i.e, CAD function) for each unit. Therefore, the calculated required inventory of nitrogen in the CAD tank is based on 7 days combined demand of CAD and the SGIG systems for dual unit operation.

Revision 2 of this calculation incorporates the resolution of SSFI Action Item No. SFIP 92-08, items A, D, F, and H.

Revision 4 of this calculation raises the required amount of liquid nitrogen for SGIG operation to account for system leakage. It has also replaced the 8 days of leakage with 7 days of leakage through the CAC Vent and Purge Butterfly Valve Stations per ECR 09-00416. R4

2.0 Summary of Results:

Based on this calculation, the total limiting demand for N_2 gas, for dual unit CAD and SGIG system operation, is approximately 320,000 SCF. This amount of N_2 gas contains a margin of 80,422 SCF for the limiting demand for the SGIG system. A minimum CAD tank liquid N_2 inventory corresponding to 38.5" of water column (327,800 SCF) was selected and bounds the calculated amount of N_2 required for CAD and SGIG system operation. For dual unit SGIG system operation, approximately 120,000 SCF is required. A minimum CAD tank liquid N_2 R4

inventory corresponding to 22" of water column (124,000 SCF) was selected and bounds the calculated amount of N_2 required for SGIG system operation.

Revision 1 summary:

The additional N_2 consumption attributed to the Containment Emergency Vent System valves is not impacting on the total limiting demand determined in Revision 0 of this calculation.

The total N_2 consumption margin remains approximately 25% and the calculated N_2 inventory of approximately 250,000 SCF remains valid.

Revision 2 Summary:

The resolution of SSFI Action Item No. SFIP 92-08, items A,D,F, and H does not impact the total limiting demand for nitrogen determined in Revision 1 of this calculation.

Revision 3 Summary:

This calculation is being revised as a result of NCR PB-98-01672. The NCR identified that the design basis for the Containment Atmosphere Dilution system is inaccurately described in various design and licensing documents. This revision will revise this calculation to clarify the design basis method of combustible gas control for PBAPS.

Revision 4 Summary:

This calculation has been revised as a result of ECR 09-00416. Due to the estimated system leakage, the nitrogen consumption for seven days of post-LOCA operation of SGIG has been raised from 49,904.77 SCF to 120,000 SCF. As a result, the total demand for CAD and SGIG was changed from 250,000 SCF to 320,000 SCF. The computation to determine the system leakage has been added as an attachment to this calculation. R4

3.0 Computer Calculation Information:

Reference: Calc. PM-374 (Ref 19)

4.0 Assumption / Preliminary Data:

1) The number of strokes necessary to the critical valves post-LOCA was estimated to be ten (10) times.

2) It is assumed that after a PCV is stuck open and the Relief Valve blows, operator action can be obtained within 4 hours after start of the event to enter the CAD building and valve out the failed PCV. (Ref. ARC No. 329 - 30C284 C-5)

3) For purposes of this calculation, it is conservatively assumed that the Containment Emergency Vent System R1

Page 4A follows

4.0 ASSUMPTION/PRELIMINARY DATA:

3) CONTINUED

valve will be operated after 15 hours into the TW sequence accident scenario. Subsequent valve operations are assumed to occur at the ~~rate~~ rate of 4 additional actuations over the next 48 hours. A total of 5 valve actuations during a TW sequence event are assumed. The occurrence of a TW sequence, which is defined as loss of RHR only, is not postulated concurrent with any other accident scenario. R

4) The number of vent strokes assumed in Revision 0 of this calculation (page 18) were, in all probability, based on purging and venting the containment using the PGAPS TRIP procedure. Containment venting will commence when hydrogen concentration in the dry well or torus exceeds 0.5%.

The PGAPS TRIP procedure is not consistent with the CAD strategy detailed in UFSAR Section 5.2.3.9.5. The CAD strategy is based on maintaining the containment oxygen concentration below 5% (by volume). Containment venting is required if the pressure exceeds 30 psig (approximately). Valve 3's CAD strategy, the only valve requiring SGIG supply, will be taken to reset the vacuum breaker (i.e. nitrogen supply is required to maintain the valve closed for normal operation). Therefore, the N_2 requirement for stroking valve (page 17) is conservative. R2

5.0 Design Input/Criteria:

1) DID for mod 1316, Rev 6 dated 11/14/89

2) EWL for mod 1316, Rev 21 dated 8/13/89

3) Safety Evaluation for mod 1316, Rev 12 dated 8/13/89

4) Piping and layout dwg M-3189 & 3190

5) Design Input Document for mod 5236, Rev 2 dated 11/22/91

6) ECR 09-00416 Rev 0 (Operator Log for DW Makeup using CAD – 8/4/08 to 8/4/09)

7) TODI 710172-40, CAD Tank Level and Pressure, and D/W Bulk Average Temperature from 8/4/08 – 8/4/09 R4

6.0 References

1) Process Engineering Inc, Operating and Instruction Manual For Liquid Nitrogen Tank Vendor Print No. 6280-M96-189-1

2) Mod 1316, Design Analysis, Rev 0 dt 11/14/89

3) PBAPS UFSAR Section 5.2.3.8 - CAC System and 5.2.3.9 - CAD system

4) LIS-6530 A Calibration Sheet dt, 11/16/89

5) PBAPS UFSAR Question 14.6

6) Docket Nos, 50-277 & 278; dt 11/22/89 PBAPS Tech Spec Change Request for CAD Tank Liq Nitrogen level

7) PBAPS Tech Spec Section 3.7.D

8) PBAPS Station Operating Procedures
a) SO 7C.1.A-2, Rev 1
b) SO 7C.1.B-2, Rev 2
c) SO 7C.3.A, Rev 1
d) SO 7C.8.A-2, Rev 1

9) CAD Tank Outline Dwg Vendor Print No. 6280-M96-1-2

10) Table A-26; Properties of Saturated Nitrogen (N_2): temperature table. "Thermodynamics" - 5th Ed. By Kenneth Wark, Jr; McGraw-Hill Book Co., Page 918

11) Crane Technical Paper No. 410; Fourteenth Print - 1974

12) GE Spec 22 A1206 AF

13) Compressed Air & Gas Data (Ingersoll – Rand Co.) – 2nd Edition, 6th Printing

14) Letter, R.S. Fleischmann to E.C. Kistner, dated 5/22/84

15) Letter, Linda Mast to Tapan Banerjee, dated 6/25/90

16) Letter, JA Jordan to Mod 1316 File, dated 12/4/89

17) N_2 leakage from SGIG header, calculation based on LLRT data (L. Mast to TK Banerjee)

18) Fax Transmittal, Process Engineering, Inc. (Scott C. Nason) to PECO (TK Banerjee) dated 7/25/90; total 4 pages

19) Calculation PM-374, Rev 0

20) Vendor Print 6280-M-117-74-1 Instruction Manual for Fisher Butterfly Valves

21) Calculation PM-386, Rev 0 dated 9/13/90

22) Set Point Calc. for Pressure Switch of Containment Isolation Butterfly Valves Boot Seals. Calc No. PE-063, Rev 0 dated 8/14/90

23) PBAPS Alarm Response Card 30C284 C-5 dated 11/19/89

24) Telecon Record; Tapan K Banerjee (PECO/NESD) and R. Nesbilt (GE – San Jose) dated 7/25/90

25) Perry's Chemical Eng Handbook, 5th Ed.

26) G.H. Bettis Heavy – Duty Product Series Pneumatic Actuators Catalog # 30.00-1A, pages 11, 19, front cover, and back cover

27) Telecon record Steward (G/C Inc.) and Burkenhoff (GH Bettis) dated 3/23/92

28) NEDO-22155, Generation and Mitigation of Combustible Gas Mixtures Core Inerted Mark I Containments, dated June 1982

29) Nuclear Regulatory Commission (NRC) letter from John F. Stolz (Chief Operating Reactors Branch (Division of Licensing)) to Edward G. Bauer, Jr., Vice President and General Counsel Philadelphia Electric Company "Recombiner Capability Requirements of 10 CFR 50.44 (C)(3)ii Generic Letter 84-09," dated 6/26/85

Page 7a follows

30) Calculation PM-804, "Post LOCA Containment Atmosphere Dilution System Analysis on rerated core power"

31) ECR 09-00416 Rev 0, "Revise Calc PM-375 (CAD/SGIG Required N_2 Level)"

32) TODI 710172-40, CAD Tank Level and Pressure, and D/W Bulk Average Temperature from 8/4/08 – 8/4/09

R4

Page 7b follows

7.0 Attachments:

The following references are attached with the calculation:

Reference	Description	Pages
1	Process Eng. Inc., Print No. 6280-M96-189-1	1
10	Table A-26; Properties of Sat. N_2 : Temperature Table	5
13	Compressed Air & Gas Data	1
14	Letter, R.S. Fleischmann to E.C. Kistner	1
15	Letter, Linda Mast to Tapan Banerjee	1
16	Letter, JA Jordan to Mod 1316 File dated 12/4/89	1
17	N_2 Leakage from SGIG header, Calculation based on LLRT data (L.Mast to TK Banerjee)	1
18	Fax Transmittal, Process Eng. Inc. dated 7/25/90	4
20	Vendor Print 6280-M-117-74-1 Instruction Manual for Fisher Butterfly Valves	9
23	PBAPS Alarm Response Card 30C284 C-5	1
24	Telecon Record, TK Banerjee and R. Nesbilt (7/25/90)	1
26	GH Bettis Heavy-Duty Product Series Pneumatic Actuators Catalog #30.00-1A	4
27	Telecon Record, Steward and Burkenhoff (3/23/92)	1

Attachment I – Evaluation for SSFI Action Item No. SFIP92-08, Item 1A

Attachment II – Computation of System Leakage (ECR 09-00416) R4

8.0 CALCULATION: 1A

Following a LOCA, hydrogen (H_2) and Oxygen (O_2) could be generated within the primary containment. The CAD system, by introducing nitrogen (N_2) gas into the primary containment, maintains the concentration of H_2 and O_2 below the flammability limits within the primary containment. The earliest time for N_2 addition to begin is about 1 day following LOCA (Ref. PBAPS UFSAR section 5.2.3.9.4).

The Safety Grade Instrument Gas (SGIG) system is a hard piped system which provides N_2 gas as back up supply, on loss of Instrument Air, to the Containment Atmospheric Control (CAC) system purge and vent valves, the Containment Atmospheric Dilution (CAD) valves, ~~and~~ the Torus-to-Secondary Containment Vacuum Breaker valves, and the Containment Emergency Vent System valves. R1
Loss of instrument air is assumed concurrent with the occurrence of a LOCA event. Even though, the limiting demand for the CAD and SGIG system may not occur simultaneously, the demands have been added to arrive at the total N_2 requirement from the CAD tank.

To calculate the total system demand for both the CAD and the SGIG system, for two unit operation, the following conditions were postulated.

a) CAD System Limiting demand:

By the admission of N_2 inside the primary Containment, following a LOCA, the CAD system maintains the primary Containment O_2 concentration below 5% level. PBAPS Figure 5.2.14 Conservatively shows the maximum total nitrogen requirement as a function of time.
Based on this Chart, for 7 days (note: N_2 admission from CAD system starts 1 day after LOCA event) the total N_2 demand is approximately 200,000 SCF.

INSERT 9-1

b) Limiting Demand For the SGIG System:

For Calculating the SGIG System demand, the following design basis was assumed as the possible Combination for CAD and SGIG Systems limiting demand for dual unit operation:

(1) 1 unit under LOCA + 1 unit under Safe Shutdown
(2) 1 Unit under TW sequence + 1 Unit under Safe Shutdown R1

1a) SGIG System demand for unit under LOCA

N_2 required to meet the demand for the following Components:

- Leakage through the vent & Purge Valve Stations
- 46 - Purge and Vent Butterfly Valves R2
- 2 - Vacuum Breaker Valves (to reclose following a LOCA)
- Maintain 67 psig at The Boot Seals of the Containment purge & Vent Valves and the torus-to-Secondary containment Vacuum breakers

Page 9a follows

INSERT 9-1:

It should be noted that the total N_2 demand of 200,000 scfm is an arbitrary limit for the CAD system usage which is confirmed by Calculation PM-804. (Reference 30) Calculation PM-804 shows that CAD system usage will be less than 200,000 scfm for 7 days.

- Leakage between Cross-tie check valves between SGIG and the IA System (upon loss of Instrument Air)

- PCV Regulator stuck open and RV blowing for 4 hrs.

Unit under Safe shutdown:

The following is the N_2 requirement to meet the demand for the condition listed below:

- System Leakage

- Leakage through Cross-tie check valve between SGIG and IA system

NOTE: [~~NOTE- Changes noted below not made per G/C revision 1.~~] R1

Mod 1950A was installed to provide a backup pneumatic (N_2) supply for the SRV's RV-2/3-02-071 E, H, and J (for both PBAPS Units 2 and 3) in the event of an Appendix R fire. The N_2 supply for these valves comes from the CAD tank through a connection from the Safety Grade Instrument Gas (SGIG) header piping. The N_2 supply header going to each unit has a locked close valve. On a postulated Appendix R fire (for a particular unit), the locked close valve has to be opened by manual operator action to establish N_2 flow to the above referenced valve stations.

~~A seven-day supply of N_2 gas is maintained in the Containment Atmospheric Dilution (CAD) tank in the form of Liquid Nitrogen (LN_2) inventory to serve the post-LOCA CAD and the SGIG functions. Within a seven-day period the CAD tank LN_2 inventory can be replenished from outside source.~~

An Appendix R fire is an independent event of a DBA-LOCA and also, the DBA-LOCA is not an initiating event for an Appendix R fire. Therefore, the post-LOCA CAD N_2 demand and N_2 demand for Mod 1950A are not additive. The SGIG system supplies backup N_2 to the CAC Isolation Valves, CAD vent valves and torus vacuum breaker isolation valves. The SGIG system supplies N_2 gas to these valve stations in case of a postulated loss of normal instrument air. The SGIG system normally is a standby system and the N_2 demand (for the SGIG system) is not significant compared to the LN_2 inventory available in the CAD tank. The Mod 1950A nitrogen demand is also extremely small compared to the available N_2 inventory in the CAD tank. Therefore, N_2 demand for Mod 1950A is not a concern for determining the CAD tank capacity or the volume of LN_2 inventory to be maintained in the CAD tank. ~~A copy of Revision 1 of Mod 1950 Safety Evaluation is attached for information.~~ Page 10a follows

(2a) SGIG demands for Unit under TW Sequence

- Maintain 80 psig minimum pressure at the Containment Emergency Vent System valve actuator.
- Capability of supplying a minimum flow rate of 8.6 SCFM to the actuator of valve AO-(8)9029c when it is requested to open. (Refer to Page 17a)
- Capability of supplying a minimum flow rate of 1 SCFM to the actuator of valve AO-(2)3511. (Refer to Page 17d). R

(2b) SGIG demand for Unit not under TW Sequence

- Containment Emergency Vent System valves and Containment Atmosphere Control Vent valves are normally closed, failed closed, no SGIG or IA required.

Calculation to establish total liquid nitrogen demand for CAD and SGIG system for dual unit operation:

Total N_2 Gas Demand = 320,000 SCF (pg 23) R4

SCF is defined at 14.7 psia and at 70 °F

Using ideal Gas Law for N_2:

$$\overline{M} = \frac{P \times v}{R \times T} = \frac{(1atm) \times (320{,}000\, ft^3)}{(0.730 \frac{atm - ft^3}{lb - mol\ ^oR}) \times (529.7\ ^oR)}$$ R4

Note: R = Universal Gas Constant

R = 0.730 $\frac{atm - ft^3}{lb - mol\ ^oR}$ (Ref 10)

T = 459.7 + 70 = 529.7 °R

$$\overline{M} = 827.56\, lb - mol$$

$$= 827.56\, lb - mol \times \frac{28.01\, lb}{lb - mol}$$ R4

$$= 23{,}179.83\, lbm\ of\ N_2$$

OPERATING CONDITION OF THE CAD TANK

The CAD tank is usually maintained between 170 and 250 psig; 250 psig being the set pressure of the relief valve on the tank.

Note: The following N_2 Liq. & Vap. properties were calculated by cubic interpolation, for 170 and 250 psig, from the data obtained from Ref. 10, Table A-19, page 918.

	T °R	Press. psia	Sp. Volume * (NOTE) Sat. liquid V_f ft³/lb	Specific Vol * (NOTE) Sat. Vap. V_g ft³/lb
	190	162.8	.0246	.344
CALCULATED VALUE ▷		184.7	.02513	.30027
	200	226.9	.0262	.239
▷		264.7	.02719	.19867
	210	307.3	.0285	.164

MAX. Tank Volume is calculated based on Ref. (9)

Inner dia of Tank	90.00	inches
Over all length of Tank	254.75	inches
Length of Tank Cylinder	209.75	inches
Max. length of 2:1 Elliptical Cap	22.50	inches

* NOTE: CALCULATED VALUES FROM REF. 19 CALC.

Based on this info., the max calculated vol. of the tank:

Ref: Perry's Chemical Engineering Handbook, 5th Edition, Tables 6-51A (Page 6-86) and Table 6-53 (Page 6-87)

a) Cylinder Volume:

$$\text{dia} = 90'' = 90/12 = 7.5' = D$$

$$\text{Length} = 209.75'' = \frac{209.75}{12} \text{ ft}$$

$$\text{Gal./ft} = 5.875\, D^2 \quad \text{(Ref: Table 6-51B Perry's Chemical Engg Handbook)}$$

$$= 5.875 \times (7.5)^2$$

$$\text{Total Volume} = 5.875 \times (7.5)^2 \times \frac{209.75}{12}$$

$$= 772.18 \text{ cu ft}$$ SCC

b) ELLIPTICAL HEAD VOLUME

vol. of one Ellipsoidal (2:1) Head

$$= \pi D_i^3 / 24 \quad \text{(Ref: Table 6-53 Perry's Chemical Engg. Handbook)}$$

$$= \pi \left(\frac{90}{12}\right)^3 \times 1/24 = 55.22 \text{ cu ft}$$ SCC

c) TOTAL TANK VOLUME

$$(a) + 2(b) = 772.18 + 2 \times 55.22 \text{ cu-ft}$$

$$= 882.62 \text{ cu ft}$$

$$= 882.6 \times 7.48052 = 6602.4 \text{ Gallons}$$ SCC

Tank Pressure	With Liquid Inventory Only	With Both Liquid and Vapor N_2 Considered in the Tank	
		Max Tank Vol = 882.62 cu-ft = 6602 Gallons	Nominal Tank Capacity = 6000 Gallons
170 psig V_L = 0.02513 ft^3/lb V_g = 0.30027 ft^3/lb	$0.13368 \times \frac{X_L}{0.02513} = 23{,}179.8\ lbm$ $X_L = 4357.48\ Gallons$ Vendor Calculated 4342.8 Gallons at 170 psig (Ref 18)	$0.13368\left[\frac{X_L}{0.02513} + \frac{(6602 - X_L)}{0.30027}\right] = 23{,}179.8\ lbm$ $X_L = 4152.5\ Gallons$	$0.13368\left[\frac{X_L}{0.02513} + \frac{(6000 - X_L)}{0.30027}\right] = 23{,}179.8\ lbm$ $X_L = 4207.5\ Gallons$
250 psig V_L = 0.02719 ft^3/lb V_g = 0.19867 ft^3/lb	$0.13368 \times \frac{X_L}{0.02719} = 23{,}179.8\ lbm$ $X_L = 4714.7\ Gallons$ Vendor Calculated 4710 Gallons at 250 psig (Ref 18)	$0.13368\left[\frac{X_L}{0.02719} + \frac{(6602 - X_L)}{0.19867}\right] = 23{,}179.8\ lbm$ $X_L = 4415.4\ Gallons$	$0.13368\left[\frac{X_L}{0.02719} + \frac{(6000 - X_L)}{0.19867}\right] = 23{,}179.8\ lbm$ $X_L = 4510.9\ Gallons$

R4

R4

SGIG System Demand Calculation

The SGIG System demand calculation is performed based on the assumptions described on 9 of this Calc.

(1) Leakage Thru' CAC vent & Purge Butterfly Valve stations:

200 SCCM per valve station approx. (Ref. 14)

$200\ SCC/min \times 3.531 \times 10^{-5}\ scf/SCC =$

$7.062 \times 10^{-3}\ scf\ ft^3/min$ per valve station

1/sec

There are 17 valve stations per unit

therefore, total no. of valve stations

$= 17 \times 2 = 34$ (for both the units)

$$Total\ Leakage = 34\ valves \times 7.062 \times 10^{-3}\ \frac{std\ ft^3}{\text{min}-valve}$$

$$= 0.240\ SCFM$$

$$= \left(0.240\ \frac{SCF}{\text{min}}\right)\left(60\ \frac{\text{min}}{hr}\right)\left(24\ \frac{hr}{day}\right)(7\ days)$$

$$= 2419.2\ SCF\ total\ for\ 7\ days$$

R4

(2) Containment Atmospheric Control Vent and Purge Butterfly Valves (18" Size):

These valves are normally closed and fail closed. It is assumed that the Containment was being purged while LOCA occurs. Following a LOCA, and loss of instrument air, these valves will go closed. These valves are not required to be operated following a LOCA (except for emergency venting through the large Butterfly vent valves which is beyond the design basis). However, the boot seals for all the containment isolation butterfly valves need to remain inflated following the accident scenario. The N_2 requirement for maintaining boot seals inflated condition has been accounted for in this calculation. During a TW sequence venting operation, the inboard 18" CAC vent valve is required to operate concurrent with the Containment Emergency Vent System valve to establish the vent path to atmosphere.

(3) N_2 Requirement for Stroking Valves:

The following valves have been evaluated to be the only valves required to change position which are supplied by the SGIG system:

Valves	Flow Requirement	Stroke Time
1) Torus-to-Secondary Cont. Vac. Brkrs.		
AO-(2)3502 A	12.7 scfm (Ref. 21)	8 Sec* (Note 1) (Unit 3 MAT)
(2)3502 B	81.8 scfm (Ref. 21)	8 Sec (UNIT 3 MAT)
2) CAC Vent Valves		
AO-(2) 3509	1 scfm* (Note 2) (Ref 12)	5 Sec
(2) 3510	1 " (")	5 Sec
(2) 3513	1 " (")	5 Sec
(2) 3514	1 " (")	5 Sec
3) CAD vent Valves		
CV-(4)5954	1 " * (Note 3) (Assumed same as CAC vent valves)	5 Sec
(4)5957	1 " (" ")	5 Sec

4) CONTINUED ON PG. 17a R1

NOTE: (1) Per UFSAR Table 7.3.1, the stroke time for the Vac. brkr. valves is 10 sec. Per Unit 3 MAT, the stroke time for these valves is approx. 8 sec. Since, 8 sec. will provide more conservative required total N_2 flow demand to operate these valves, 8 sec. is used for this calc.

(2) 1 scfm of flow is obtained from Ref 12 calc. This number is not completely verified. However, using engineering judgement (and also this no. does not have any significant

Page 17a follows

(3) N_2 REQUIREMENTS FOR STROKING VALVES (CONT):

4) Containment Emergency Vent System valves:

VALVES	FLOW REQUIREMENT	STROKE TIME
AO-(8)90290	8.6 SCFM (REF. 27) (NOTES 5 + 7)	12 SECONDS (NOTE 6)

R

5) Containment Atmospheric Control Vent (Isolation) valves:

VALVES	FLOW REQUIREMENT	STROKE TIME
AO-(2)3511	1 SCFM (REF. 12 (NOTE 4)	5 SECONDS

Notes: (cont'd from page 17)
impact on the final result of this calculation), 1 scfm flow requirement has not been changed.

(3) CV-(4)5954 & (4)5957 CAD Vent Valves are 1" size and same size as the CAC vent valves under item 2) above; therefore, N_2 flow required to operate these valves are assumed to be the same as the CAC vent valves (2)3509, etc.

(NOTES continued on Pg. 18a) (4) AO-(2)3511 are the same size valves and actuators as AO-(2)3513 and are assumed to have the same N_2 flow requirements of 1 SCFM similar to note 2 above R1

total N_2 flow required to operate these valves:

① $12.7 \text{ scfm} \times \frac{1 \text{ min}}{60 \text{ sec}} \times 8 \text{ sec} = 1.69 \text{ scf}$

② $81.8 \text{ scfm} \times \frac{1 \text{ min}}{60 \text{ sec}} \times 8 \text{ sec} = 10.9 \text{ scf}$

③ $1 \text{ scf/min} \times 1 \text{ min}/60 \text{ sec} \times 5 \text{ sec} = .083 \text{ scf} \times 6 \text{ valves}$
$= .498 \simeq .5 \text{ scf}$

assume 10 strokes required during a seven (7) day period:

10 strokes × 1.69 scf = 16.9 scf total
10 strokes × 10.9 scf = 109.3 " "
10 strokes × 0.5 scf = 5.0 " "

131.2 scf

✓ SCC

Page 18a follows

NOTES: (continued)

(5) Actual actuator volume equals 1.72 ft^3 (Reference #27).

(6) Required stroke time per Design Input Document (Ref. Section 5.0, item 5) is ≤ 15 seconds. To ensure full actuator piston displacement and provide conservatism, the evaluated stroke time was considered to be 80% of required stroke time or 12 seconds. R

(7) Minimum flow rate in SCFM to the valve actuator was determined as follows:

$$\left(\frac{\text{Actuator volume}}{\text{Required stroke time}}\right) \times 60 \text{ sec/min} = \text{SCFM}$$ MJ

$$\left(\frac{1.72 \text{ ft}^3}{12 \text{ seconds}}\right) \times 60 \text{ sec/min} = \text{SCFM}$$

$$\underline{\underline{8.6 \text{ SCFM}}}$$

N_2 flow at 80 psig minimum header pressure required to operate AO-(8)90290 and AO-(2)3511 is as follows:

- Assuming a total of 5 actuations (Ref. Section 4, item 3). R1
- Assuming only 1 unit in TW sequence (Ref Section 8, item b).

AO-(8)90290 : 1.72 SCF × 5 actuations = 8.6 SCF MJM

AO-(2)3511 : 0.083 SCF × 5 actuations = 0.415 SCF

(Continued on Page 19a)

e) Purge & Vent Valve Boot Seals

The following Valves have boot seals:

AO-(2) 3507 ✓	18"
3506 ✓	18"
AO-(2) 3512 ✓	18"
3511 ✓	18"
AO-(2) 3502A ✓	20"
AO-(2) 3505 ✓	18"
3520 ✓	18"
AO-(2) 3521A ✓	18"
3521B ✓	18"
AO-(2) 3519 ✓	6"

Page 19c follows

CALCULATION	SUBJECT CAD AND SGIC N_2 DEMAND REQUIREMENT	IDENTIFIER PM-375	PAGE 19a OF 24 PAGES
REV. 0	1	2	3
MICROFILMED			
ORIGINATOR	R. Stewart		
DATE	3-6-92		

(CONTINUED FROM Page 19)

Total N_2 flow requirement is as follows:

	131.2 SCF	(Pg. 18)
	8.6 SCF	(Pg. 19)
	0.415 SCF	(Pg. 19)
TOTAL	140.215 SCF	

Page [redacted] follows

196-21453 7/89

NUCLEAR GROUP	CALCULATION SHEET DOCTYPE:000	CALC NO PM-375 REV 0 PAGE 20 OF 24 ORIGINATOR TK Banerjee DATE 9/12/90 REVIEWER S.C. Gatt DATE 9-13-90

$Vol = \pi/4 \left[\left(\frac{A}{12}\right)^2 - \left(\frac{B}{12}\right)^2 \right] \times \frac{3/4''}{12}$ The following dimensions are assumed:

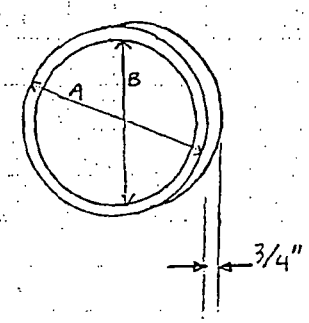

	18" valve	20" valve	6" valve
A	18.5"	20.5	6.5"
B	17.5"	19.5"	5.5"
Vol.	.012 cuft	.0136 cuft	.0052 cuft
No of Valves, both units	16	2	2
10 Strokes	×10	×10	×10
Total Volume:	1.92 cuft	.272 cuft	.104 cuft

Total vol = 1.92 + .272 + .104 = 2.296 ≃ 2.3 cuft
at 67 ± 4.94 psi (Ref 22)

At standard Condition = $\frac{P_1 V_1}{T_1} = \frac{P_2 V_2}{T_2}$

$T_1 = 70°F = 70° + 459.7 = 529.7°R$
$T_2 = 60°F = 519.7°R$ (Std. Condition)

therefore, $(71.94 + 14.7) \times \frac{2.3}{529.7} = 14.7 \times \frac{V_2}{519.7}$

$V_2 = 13.30$ SCF

NOTE: The boot Seals are ⊥ shaped (Ref. 20). The ref. 20) vendor manual does not provide a volume estimate. Since the total vol. of the boot Seals is insignificant compared to the total N_2 demand, the vol. of boot Seals was approximately modeled as a annulus ring.

f) INVENTORY IN SGIG TUBING :

(i) Using Bill of materials (Dwg reference : M-3189 & 3190) the SGIG piping & tubing volume is calculated to be following :

	UNIT 2	UNIT 3
Tubing	6.472 cu-ft	6.472 cu ft
Fittings @ 5%	.3236 "	.3236 "
Total	6.7956 cu ft	6.7956 cu ft
Assume	6.8 cu ft	6.8 cu ft

Nominal header pressure 85 psig

therefore, Volume at 85 psig = 2 × 6.8 = 13.6 c-ft
at Std Condition

assume, $T_1 = 70°F = 70° + 459.7 = 529.7°R$
$T_2 = 60°F = 519.7°R$

$$(85 + 14.7) \times \frac{13.6}{529.7} = 14.7 \times \frac{V_2}{519.7}$$

$$V_2 = 90.5 \text{ SCF}$$

The increase in SGIG inventory requirement, as a result of MOD 5236 additions, is considered to be minimum and non-impacting on the V_2 value noted above. R1

(ii) by EWL for Mod 1316, the total system leakage allowed = 1 psi drop in the header pressure in 10 minutes

196-21453 7/89

NUCLEAR GROUP	CALCULATION SHEET DOCTYPE:000	CALC NO PM-375 REV 02 PAGE 22 OF 24 ORIGINATOR TK Banerjee DATE 9/12/90 REVIEWER S.C Cat DATE 9/13/90

R2

$P_1 = 100$ Psig $= 114.7$ psia

$P_2 = 99$ " $= 113.7$ "

$114.7 \times 13.6 = 113.7\ (13.6 + \Delta V)$

$\Delta V = .1196$ cu ft (in 10 min)

$= .1196 \times 60\ \text{min}/10\ \text{min} \times 24\ \text{hr}/1\ \text{hr} \times 7$ day

$= 120.56$ Cu ft at 99 psig

AT 85 psig nominal header pressure, this vol. should be

~~$(85+14.7)/113.7 \times 120.56 = 105.7$ cu ft~~

$\frac{(99+14.7)}{(85+14.7)} \times 120.56 = 137.5$ cu. ft.

R2

Assume, $T_1 = 70°F + 459.7°R = 529.7°R$

$T_2 = 60°F = 519.7°R$

$$\frac{P_1 V_1}{T_1} = \frac{P_2 V_2}{T_2} \qquad \frac{99.7 \times 137.5}{529.7} = \frac{14.7\ V_2}{519.7}$$

Therefore, $V_2 = 915$ SCF

R2 MRD 6/21/93

g) CALCULATION OF PCV FAIL OPEN FLOW RATE (4 Hours)

~~Refer to Attachment I.~~

~~Per reference (13), 150 SCFM can be discharged through a 1/4" orifice with pressure upstream of the orifice at 150 lbs~~

~~150 psig upstream pressure is based upon,~~

~~250 psig maximum tank press − 115 psig (RV-70001 Set Point)~~

R2

Total Demand for Dual Unit Operation	
1) CAD Demand	200,000 SCF
2) Leakage through CAC Vent & Purge Butterfly Valve Stations	2419.2 SCF
3) N_2 for stroking valves	140.215 SCF
4) Purge & Vent B/F Valves Boot Seals	13.3 SCF
5) Inventory in SGIG System	90.5 SCF
6) Pressure decay make up in SGIG Header and Tubing	915 SCF
7) PCV Fail Open (4 hours)	36,000 SCF
8) Available Margin (Leakage) (Attachment II - Computation of System Leakage)	80,422 SCF
SGIG Demand (items (2) through (8)) =	120,000 SCF
CAD + SGIG Demand (Total Demand) =	320,000 SCF

R4

R4

R4

Setting of Minimum Liquid Nitrogen (LN_2) Level and Low Level Alarm (LIS-6530A,B) Setpoint in CAD Tank:

The minimum required level and low level alarm setpoints are based on CAD Tank Vendor provided information (Ref. 18). The vendor supplied table provides liquid nitrogen volume at corresponding inches of water column for an operating pressure of 250 psig in the CAD storage tank. Using the 250 psig table provides the most conservative setpoints and is the same as the maximum allowed working pressure of the CAD storage tank.

R4

The minimum CAD storage tank level for 7 days of Post-LOCA operation for SGIG and SGIG + CAD were calculated and rounded up to an acceptable level. The following values were selected from the vendor supplied table (Ref 18) as the minimum CAD storage tank levels:

SGIG operation = 22" water column / 124,000 SCF / 1,825 gallons
CAD + SGIG operation = 38.5" water column / 327,800 SCF / 4,826 gallons

The low level alarm setpoint must be set at a level above the minimum level requirements listed above. When determining the low level alarm setpoint, the 250 psig vendor supplied table (Ref.18) should be used.

This page left intentionally blank

MODEL H-6000 SPECIAL

TENTS LIQUID NITROGEN 6.746 LBS/GAL 13.803 SCF/LB

IN. H2O	GALLONS	POUNDS	MSCF	IN. H2O	GALLONS	POUNDS	MSCF
0.0	0.0	0	0	50.0	4,838.1	32,638	451
1.0	16.1	109	2	51.0	4,944.9	33,358	460
2.0	45.9	310	4	52.0	5,050.0	34,068	470
3.0	84.8	572	8	53.0	5,153.5	34,765	480
4.0	130.9	883	12	54.0	5,255.0	35,450	489
5.0	183.3	1,236	17	55.0	5,354.6	36,122	499
6.0	241.2	1,627	22	56.0	5,452.0	36,779	508
7.0	304.0	2,051	28	57.0	5,547.1	37,421	517
8.0	371.5	2,506	35	58.0	5,639.7	38,045	525
9.0	443.1	2,989	41	59.0	5,729.7	38,653	534
10.0	518.5	3,498	48	60.0	5,816.9	39,241	542
11.0	597.6	4,031	56	61.0	5,901.1	39,809	549
12.0	680.0	4,587	63	62.0	5,982.1	40,355	557
13.0	765.5	5,164	71	63.0	6,059.6	40,878	564
14.0	854.0	5,761	80				
15.0	945.1	6,376	88				
16.0	1,038.8	7,008	97				
17.0	1,134.9	7,656	106				
18.0	1,233.3	8,320	115				
19.0	1,333.7	8,997	124				
20.0	1,436.1	9,688	134				
21.0	1,540.3	10,391	143				
22.0	1,646.1	11,105	153				
23.0	1,753.5	11,829	163				
24.0	1,862.4	12,564	173				
25.0	1,972.6	13,307	184				
26.0	2,083.9	14,058	194				
27.0	2,196.3	14,817	205				
28.0	2,309.8	15,582	215				
29.0	2,424.0	16,353	226				
30.0	2,539.1	17,129	236				
31.0	2,654.7	17,909	247				
32.0	2,771.0	18,693	258				
33.0	2,887.6	19,480	269				
34.0	3,004.6	20,269	280				
35.0	3,121.8	21,060	291				
36.0	3,239.2	21,852	302				
37.0	3,356.6	22,644	313				
38.0	3,473.9	23,435	323				
39.0	3,591.0	24,225	334				
40.0	3,707.9	25,014	345				
41.0	3,824.4	25,799	356				
42.0	3,940.4	26,582	367				
43.0	4,055.8	27,360	378				
44.0	4,170.5	28,134	388				
45.0	4,284.4	28,903	399				
46.0	4,397.4	29,665	409				
47.0	4,509.4	30,421	420				
48.0	4,620.3	31,168	430				
49.0	4,729.9	31,908	440				

CALC PM-375

REF 1

From V P #

6280-M-96-189-1

PAGE 1 OF 1

CALC PM-375
REF 10
1 OF 5

THERMODYNAMICS

Fifth Edition

Kenneth Wark, Jr.
Associate Professor
of Mechanical Engineering
Purdue University

McGraw-Hill Book Company
New York St. Louis San Francisco Auckland Bogotá Caracas Colorado Springs Hamburg
Lisbon London Madrid Mexico Milan Montreal New Delhi Oklahoma City
Panama Paris San Juan São Paulo Singapore Sydney Tokyo Toronto

CALC PM-375

Ref 10

2 OF 5

APPENDIX A-2

SUPPLEMENTARY TABLES AND FIGURES (USCS UNITS)

REF. 10
3 OF 5

CALC PM-375

TABLE A-1
Physical constants and conversion factors

Physical constants	
Standard gravity	$g = 32.174\ \text{ft/s}^2$
Universal gas constant	$R_u = 1545\ \text{ft}\cdot\text{lb}_f/(\text{lbmol}\cdot{}^\circ\text{R})$
	$= 1.986\ \text{Btu}/(\text{lbmol}\cdot{}^\circ\text{R})$
	$= 0.730\ \text{atm}\cdot\text{ft}^3/(\text{lbmol}\cdot{}^\circ\text{R})$
	$= 10.73\ \text{psia}\cdot\text{ft}^3/(\text{lbmol}\cdot{}^\circ\text{R})$
Conversion factors	
Length	$1\ \text{cm} = 0.3937\ \text{in} = 10^4\ \mu\text{m} = 10^8\ \text{Å}$
	$1\ \text{in} = 2.540\ \text{cm}$
	$1\ \text{ft} = 30.48\ \text{cm}$
Mass	$1\ \text{lb}_m = 453.59\ \text{g}_m = 7000\ \text{gr}$
	$1\ \text{kg}_m = 2.205\ \text{lb}_m$
Force	$1\ \text{lb}_f = 32.174\ \text{lb}_m\cdot\text{ft/s}^2$
	$1\ \text{lb}_f = 444{,}800\ \text{dyn} = 4.448\ \text{N}$
	$1\ \text{torr} = 1\ \text{mmHg at } 0^\circ\text{C} = 10^3\ \mu\text{m Hg}$
	$= 1.933 \times 10^{-2}\ \text{psi}$
Volume	$1\ \text{L} = 0.0353\ \text{ft}^3 = 0.2642\ \text{gal} = 61.025\ \text{in}^3$
	$1\ \text{ft}^3 = 28.316\ \text{L} = 7.4805\ \text{gal} = 0.02832\ \text{m}^3$
	$1\ \text{in}^3 = 16.387\ \text{cm}^3$
Density	$1\ \text{lb}_m/\text{ft}^3 = 0.01602\ \text{g}_m/\text{cm}^3$
Energy	$1\ \text{Btu} = 778.16\ \text{ft}\cdot\text{lb}_f = 1055\ \text{J}$
	$1\ \text{Btu/lb} = 2.32\ \text{kJ/kg}$
Power	$1\ \text{W} = 1\ \text{J/s} = 3.413\ \text{Btu/h}$
	$1\ \text{hp} = 746\ \text{W} = 550\ \text{ft}\cdot\text{lb}_f/\text{s} = 2545\ \text{Btu/h}$
Velocity	$1\ \text{mi/h} = 0.447\ \text{m/s}$
Specific heat	$1\ \text{Btu}/(\text{lb}_m\cdot{}^\circ\text{F}) = 4.187\ \text{kJ}/(\text{kg}\cdot\text{K})$
Temperature	$T(^\circ\text{R}) = T(^\circ\text{F}) + 459.67 = 1.8[T(^\circ\text{C}) + 273.15] = 1.8T(\text{K})$

TABLE A-2
USCS (engineering) derived units

Physical quantity	Unit	Symbol	Definition
Force	pound-force	lb_f	$32.174\ \text{lb}_m\cdot\text{ft/s}^2$
Pressure	atmosphere	atm	$68{,}087\ \text{lb}_m/\text{ft}\cdot\text{s}^2$
			$(= 14.696\ \text{lb}_f/\text{in}^2)$
Energy	foot-pound-force	$\text{ft}\cdot\text{lb}_f$	$32.174\ \text{lb}_m\cdot\text{ft}^2/\text{s}^2$
Power	foot-pound-force/second	$\text{ft}\cdot\text{lb}_f/\text{s}$	$32.174\ \text{lb}_m\cdot\text{ft}^2/\text{s}^3$
			$(= 1.82 \times 10^{-3}\ \text{hp})$

CALC PM-375
REF 10
4 OF 5

TABLE A-19
Properties of saturated nitrogen (N_2): Temperature table
v, ft³/lb; u and h, Btu/lb; s, Btu/(lb·°R)

		Specific volume		Internal energy		Enthalpy			Entropy	
Temp., °R T	Press., psia P	Sat. liquid v_f	Sat. vapor v_g	Sat. liquid u_f	Sat. vapor u_g	Sat. liquid h_f	Evap. h_{fg}	Sat. vapor h_g	Sat. liquid s_f	Sat. vapor s_g
113.7*	1.82	0.0185	23.73	35.32	119.91	35.33	92.59	127.90	0.5802	1.395
120.0	3.34	0.0188	13.56	38.33	120.93	38.34	90.98	129.32	0.6060	1.365
130.0	7.67	0.0193	6.321	43.19	122.47	43.22	88.22	131.44	0.6449	1.324
139.2	14.70	0.0198	3.473	47.71	123.77	47.77	85.45	133.22	0.6785	1.293
140.0	15.46	0.0199	3.315	48.09	123.87	48.15	85.21	133.36	0.6812	1.290
150.0	28.19	0.0205	1.899	53.02	125.11	53.13	81.89	135.02	0.7153	1.262
160.0	47.52	0.0213	1.164	58.00	126.14	58.19	78.19	136.38	0.7474	1.236
170.0	75.18	0.0222	0.750	63.08	126.91	63.39	73.96	137.35	0.7782	1.214
180.0	113.0	0.0233	0.502	68.30	127.36	68.79	69.07	137.86	0.8082	1.192
190.0	162.8	0.0246	0.344	73.75	127.40	74.49	63.28	137.77	0.8378	1.171
200.0	226.9	0.0262	0.239	79.52	126.84	80.62	56.24	136.86	0.8677	1.149
210.0	307.3	0.0285	0.164	85.86	125.33	87.48	47.20	134.68	0.8992	1.124
220.0	406.9	0.0325	0.107	93.57	121.80	96.01	33.85	129.86	0.9363	1.090
226.0	477.9	0.0394	0.071	101.46	115.66	104.95	16.97	121.92	0.9742	1.049
227.2*	493.1	0.051	0.051	108.59	108.59	113.25	0	113.25	1.010	1.010

* 113.7°R is the triple state and 227.2°R is the critical state.

Source: Adapted from National Bureau of Standards, Technical Note 648, 1973.

CALC PM-375 REF 10
5 OF 5

TABLE A-20
Properties of nitrogen (N_2): Superheated-vapor table
v, ft³/lb; u and h, Btu/lb; s, Btu/(lb·°R)

Temp., °R	v	u	h	s	v	u	h	s
	20 psia (T_{sat} = 144.1°R)				50 psia (T_{sat} = 161.0°R)			
200	3.755	134.83	148.73	1.364	1.454	133.97	147.44	1.295
250	4.740	143.87	161.42	1.421	1.866	143.30	160.58	1.354
300	5.714	152.82	173.98	1.467	2.266	152.40	173.38	1.400
350	6.682	161.74	186.49	1.505	2.659	161.41	186.03	1.439
400	7.647	170.65	198.97	1.539	3.050	170.37	198.61	1.473
450	8.610	179.54	211.4	1.568	3.438	179.30	211.1	1.502
500	9.572	188.42	223.9	1.594	3.826	188.22	223.6	1.529
550	10.53	197.31	236.3	1.618	4.212	197.13	236.1	1.553
	100 psia (T_{sat} = 176.9°R)				200 psia			
200	0.684	132.40	145.07	1.238	0.289	128.33	139.04	1.166
250	0.908	142.31	159.13	1.300	0.427	140.18	156.01	1.243
300	1.116	151.68	172.36	1.349	0.542	150.19	170.25	1.295
350	1.319	160.84	185.26	1.389	0.649	159.69	183.71	1.336
400	1.518	169.90	198.01	1.423	0.752	168.96	196.81	1.371
450	1.715	178.91	210.7	1.452	0.853	178.12	209.7	1.401
500	1.910	187.88	223.3	1.479	0.953	187.20	222.5	1.428
550	2.105	196.83	235.8	1.503	1.052	196.23	235.2	1.453
	500 psia				1000 psia			
250	0.132	131.52	143.78	1.141	0.038	106.30	113.40	0.994
300	0.197	145.25	163.45	1.213	0.083	135.26	150.59	1.131
350	0.247	156.09	178.96	1.261	0.115	149.67	170.95	1.194
400	0.293	166.10	193.23	1.299	0.142	161.23	187.45	1.238
450	0.337	175.73	206.9	1.331	0.166	171.77	202.5	1.274
500	0.379	185.16	220.3	1.359	0.189	181.81	216.8	1.304
550	0.421	194.46	233.4	1.384	0.211	191.56	230.6	1.330
	2000 psia				3000 psia			
250	0.029	95.00	115.61	0.939	0.026	90.47	114.97	0.917
300	0.040	118.41	133.17	1.040	0.032	110.73	128.60	1.003
350	0.055	137.38	157.78	1.116	0.040	128.97	151.34	1.073
400	0.070	151.93	177.78	1.169	0.049	144.47	171.81	1.128
450	0.083	164.27	195.11	1.210	0.058	157.89	190.16	1.171
500	0.096	175.50	211.0	1.244	0.066	169.99	207.0	1.206
550	0.108	186.11	226.0	1.272	0.075	181.28	222.8	1.237

Source: Adapted from National Bureau of Standards, Technical Note 648, 1973.

TABLE A-24

CALC PM-375

REF. 13
PG 1 of 1

DISCHARGE OF AIR THROUGH AN ORIFICE

In cubic feet of free air per minute at standard atmospheric pressure of 14.7 lb per sq. in. absolute and 70°F.

Gauge Pressure before Orifice in Pounds per sq. in.	DIAMETER OF ORIFICE										
	1/64"	1/32"	1/16"	1/8"	1/4"	3/8"	1/2"	5/8"	3/4"	7/8"	1"
	Discharge in cubic feet of free air per minute										
1	.028	.112	.450	1.80	7.18	16.2	28.7	45.0	64.7	88.1	115
2	.040	.158	.633	2.53	10.1	22.8	40.5	63.3	91.2	124	162
3	.048	.194	.775	3.10	12.4	27.8	49.5	77.5	111	152	198
4	.056	.223	.892	3.56	14.3	32.1	57.0	89.2	128	175	228
5	.062	.248	.993	3.97	15.9	35.7	63.5	99.3	143	195	254
6	.068	.272	1.09	4.34	17.4	39.1	69.5	109	156	213	278
7	.073	.293	1.17	4.68	18.7	42.2	75.0	117	168	230	300
9	.083	.331	1.32	5.30	21.2	47.7	84.7	132	191	260	339
12	.095	.379	1.52	6.07	24.3	54.6	97.0	152	218	297	388
15	.105	.420	1.68	6.72	26.9	60.5	108	168	242	329	430
20	.123	.491	1.96	7.86	31.4	70.7	126	196	283	385	503
25	.140	.562	2.25	8.98	35.9	80.9	144	225	323	440	575
30	.158	.633	2.53	10.1	40.5	91.1	162	253	365	496	648
35	.176	.703	2.81	11.3	45.0	101	180	281	405	551	720
40	.194	.774	3.10	12.4	49.6	112	198	310	446	607	793
45	.211	.845	3.38	13.5	54.1	122	216	338	487	662	865
50	.229	.916	3.66	14.7	58.6	132	235	366	528	718	938
60	.264	1.06	4.23	16.9	67.6	152	271	423	609	828	1082
70	.300	1.20	4.79	19.2	76.7	173	307	479	690	939	1227
80	.335	1.34	5.36	21.4	85.7	193	343	536	771	1050	1371
90	.370	1.48	5.92	23.7	94.8	213	379	592	853	1161	1516
100	.406	1.62	6.49	26.0	104	234	415	649	934	1272	1661
110	.441	1.76	7.05	28.2	113	254	452	705	1016	1383	1806
120	.476	1.91	7.62	30.5	122	274	488	762	1097	1494	1951
125	.494	1.98	7.90	31.6	126	284	506	790	1138	1549	2023
150	.582	2.37	9.45	37.5	150	338	600	910	1315	1789	2338
200	.761	3.10	12.35	49.0	196	441	784	1225	1764	2401	3136
250	.935	3.80	15.18	60.3	241	542	964	1508	2169	2952	3856
300	.995	4.88	18.08	71.8	287	646	1148	1795	2583	3515	4592
400	1.220	5.98	23.81	94.5	378	851	1512	2360	3402	4630	6048
500	1.519	7.41	29.55	117.3	469	1055	1876	2930	4221	5745	7504
750	2.240	10.98	43.85	174.0	696	1566	2784	4350	6264	8525	11136
1000	2.985	14.60	58.21	231.0	924	2079	3696	5790	8316	11318	14784

Table is based on 100% coefficient of flow. For well rounded entrance multiply values by 0.97. For sharp edged orifices a multiplier of 0.61 may be used for approximate results.

Values for pressures from 1 to 15 lbs gauge calculated by standard adiabatic formula.

Values for pressures above 15 lb gauge calculated by approximate formula proposed by S. A. Moss.

$$W = 0.5303 \frac{ACp_1}{\sqrt{T_1}}$$

Where:

W = discharge in lbs. per sec

A = area of orifice in sq in.

C = Coefficient of flow

p_1 = Upstream total pressure in lbs. per sq. in. absolute

T_1 = Upstream temperature in °F. abs.

Values used in calculating above table were; $C = 1.0$, p_1 = gauge pressure + 14.7 lbs./sq. in. T_1 = 530°F. abs.

Weights (W) were converted to volumes using density factor of 0.07494 lbs./cu. ft. This is correct for dry air at 14.7 lbs. per sq. in. absolute pressure and 70°F.

Formula cannot be used where p_1 is less than two times the downstream pressure.

(See page 5-10 for a discussion of orifice flow).

CALC PM-375 REFERENCE NO 2840023860
2840025060

REF 14
PG 1 OF 1

PEACH BOTTOM ATOMIC POWER STATION
Delta, Pennsylvania

E. C. KISTNER
MECHANICAL ENGINEERING
JUN 1 1984
Noted
Referred to:

PAT

May 22, 1984

FROM: R. S. Fleischmann

TO: E. C. Kistner

SUBJECT: MOD REQUEST NO. 1439 - PRIMARY CONTAINMENT VENT AND PURGE PNEUMATIC SUPPLIES.

REFERENCE: Memorandum, J. L. Horrow dated 4/25/84

The referenced memorandum provides leakage criteria for pneumatic supplies to containment vent and purge valves. The memo considers leakage up to 30 SCCM with a required nitrogen bottle change before bottle pressure is less than 1550 psig. Actual leakage rates are significantly greater, on the order of 50 to 150 SCCM. Repair of any one component on these air supply systems is not indicated since several components contribute small amounts.

Some undocumented experience with local leak rate testing and the ILRT indicates that a loss of pneumatic pressure on a closed purge or vent valve does not result in gross leakage. It is estimated that leakage would be less than 600 SCCM for most cases. Leakage at this rate would not seriously degrade primary containment integrity.

Please investigate alternatives to the present 100 day safety grade penumatic supply. Present pneumatic system leak rates cannot be improved with lasting results. The station will support any investigation needed to formally downgrade the importance of this safety grade air or to determine realistic capacities for alternative supply systems.

If you have any questions, please contact Jim Mitman of my staff.

R. S. Fleischmann
Station Superintendent

RSF/JFM:lhd

5/25
APPROVAL TO OBTAIN ESTIMATE

APPROVAL OF CAPITAL REQUEST

Attachment

REF 15
Pg 1 of 1

TO: Tapan Banerjee
FROM: Linda Y. Mast
SUBJECT: Mod 1316 Acceptance Criteria for dual unit operation

June 25, 1990

Mod 1316 is scheduled for completion during the next refueling outage for unit 2. This will result in both unit 2 and unit 3 being supplied from the common CAD tank supply. During the past unit 3 refueling outage, the mod was installed and accepted based on acceptance criteria established in the Engineering Work Letter for Mod 1316, Rev 20. This criteria, however only considered one unit in operation.

As the system engineer for Primary Containment, I do not think it is possible to do MAT testing that will directly affect unit 3, which will be in operation at the time of the MAT for unit 2, because of the risk of violating primary containment integrity. Decreasing boot seal pressure to less than acceptable (67 psig) results in the valve being inoperable for containment isolation.

I believe that the condition for which we want to prove Mod 1316 is a LOCA on one unit with four containment butterfly valves open and the other unit in safe shutdown. This is based on the unit 3 criteria and talks with you on the subject. The Safety Grade Instrument Gas Supply (SGIG), will have to be capable of closing the four open containment valves within 5 seconds, as well as supply and maintain 67 psig on all of the remaining boot seals and provide pressure to keep the torus to reactor building vacuum breakers closed. The unit in safe shutdown will require boot seal pressure and pressure to the torus to reactor building vacuum breakers. This usage will have to be simulated due to the operating condition of unit 3 at the time of the unit 2 MAT.

I think that the best way to simulate this unit 3 usage is to set up unit 2 for SGIG supply lineup and measure the flow through the SGIG pressure control valve. This flow will represent the leakage of the SGIG system. This leakage can be scaled up by some factor to simulate "worst case leakage." The unit 2 MAT can then be performed with this leakage established to represent unit 3 usage using criteria similar to that used for unit 3. This will allow testing without disturbing unit 3 operating conditions. The SGIG system will be isolated from unit 3 by one manual valve with personnel stationed at the valve for quick restoration if required.

One additional change I would like to see from the unit 3 acceptance criteria is the minimum pressure required at the Clow torus to reactor building vacuum breaker, AO-2(3)502B. This pressure should be 75 psig as specified by the manufacturer and not 80 psig as shown in the EWL rev 20.

If you would like to have a meeting to discuss the development of acceptance criteria or need clarification on any of the above, please feel free to call me at X4972., Peach Bottom.

Linda Y. Mast

Linda Y. Mast
Station Engineer for Mod 1316

Plant Division
Technical Section

REF 16
PG. 1 OF 1

December 4, 1989

FROM: J. A. Jordan

TO: MOD 1316 File
Peach Bottom Atomic Power Station

SUBJECT: MOD 1316 Memorandum Regarding Interpretation Of Loss Of Instrument Air Criteria For Testing

MOD 1316 was designed to provide a safety grade pneumatic backup supply to CAD and CAC system valves which are normally supplied by instrument air. Design of the system requires that this backup system be operable "upon loss of the normal supply system" (reference letter from S. L. Daltroff to NRC Chief J. F. Stolz, dated November 6, 1985).

The Engineering Work Letter (Rev. 18 dated November 14, 1989) specified as part of the MAT acceptance criteria that instrument air to the SGIG supplied valves be valved out and vented. The Station's interpretation of this criteria was that prior to functional testing of the CAC and CAD valves with the SGIG system, measures would be taken to ensure that air pressure in the valve boot seals and associated tubing would be vented. The MAT was set up to make sure that this criteria was met.

In order to ensure a conservative interpretation of the design criteria relative to loss of the instrument air system, it was decided to perform a test on the instrument air supply lines to individual users. This test would ensure that (1) the check valves on the supply lines (siesmic boundary between instrument air and SGIG system) would prevent backflow of SGIG - supplied nitrogen out of the valve operators and associated tubing when the normal air supply was lost, and (2) the manual valves which isolated instrument air from the individual users during the testing did not leak through (which could have masked an inability of the SGIG system to satisfactorily operate the valves). The results of this test are attached.

The test results indicate that there was no leakage through any of the check valves that isolate SGIG from the normal air supply or through the manual valves that isolate the normal air supply from the valve operators. These results, along with the MAT results, meet the conservative interpretation of the design criteria specified in the EWL.

J. A. Jordan
Reactor Systems Engineer Supervisor

JAJ:gkm

Attachments (4)

cc: H. G. Coleman
J. G. Hufnagel, Jr.
L. Y. Mast
S. F. Payton

CALC PM-375

REF 17

5) After taking a random sampling of bottle leakage (reviewing results of ST 7.9.2), the bottles lose an average of 32 psig per week. This ST procedure currently calls for the replacement of bottles when the pressure falls below 1,300 psig. The current achievable leak rate of 125 sccm and a minimum bottle pressure of 1300 psig will maintain a 20-day supply. Based on a review of past ST-7.9.2 records, the bottles would have to be replaced approximately every twenty-eight weeks assuming an initial bottle pressure of 2200 psig.

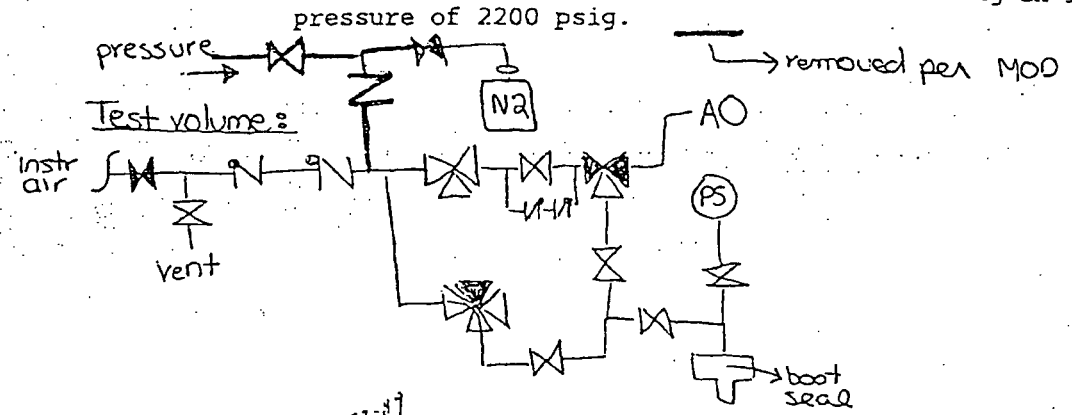

PBB 12-27-89
JGH 12-27-89

Prepared by: S. F. Payton S.F. Payton
December 27, 1989

SFP1289.1

LLRT data history for unit 2: (Pre startup test data)

AO-2519	0	
AO-2502A	65	ccm
AO-2502B	0	
AO-2521A	40	
AO-2521B	40	
AO-2520	70	
AO-2506	0	
AO-2507	20	
AO-2505	0	
AO-2511	45	
AO-2512	0	

ccm indicated

sccm = 1.5 x ccm indicated

worst value $70\,\text{ccm} \times \frac{1.5\,\text{sccm}}{\text{ccm}} = 105\,\text{sccm}$

We added 20% error for increased leakage during outage to get 125 sccm.

AO-2509, 10, 13, 14 were never LLRT'd. There is considerably less pneumatic tubing involved.

Say we use 125 sccm for >6" valves
25 sccm for other

$2\,\text{units}\left[(11)125 + 6(25)\right] = 3050\,\text{sccm}$

converts to $\frac{1086\,\text{scf}}{7\,\text{days}} \cong 12$ gallons N2

CALC PM-375
REF 18
Page 1 of 4

PROCESS ENGINEERING INC.
P.O. BOX 467
PLAISTOW, NH 03865
TEL: 603-382-6551
FAX: 603-382-2139

TELECOPY TRANSMITTAL

Date: 07/25/90

Company: Philadelphia Electric
Attention: Tapan Banerjee

Telephone No.: 215-640-6474
Fax No.: 215-640-6582

6-3B-3

We are transmitting 04 pages, including this page, to the person listed above. Should you have any problems and/or do not receive all the page, please let us know by calling (603) 382-6551 and ask for extension 2163.

Attached are three contents charts for the referenced units. They are calculated based on nitrogen properties at 0 psig, 170 psig and 250 psig, per your request. The chart at 0 psig is for comparison to your original chart. The values are close, but not identical. All of these charts are based on very limited research into these now seventeen year old units, and should be used for reference only.

Liquid height in linear inches is related to the gage reading of "inches of water column by the equation:

$$\text{linear inches} = \frac{(\text{inches } H_2O \text{ column}) \div (.036 \text{ psi/inch of } H_2O \text{ column})}{\text{density -- lbs/in}^3}$$

From: Scott C. Nason
Design Engineer

cc: Ken Paul, PEI
Ref: C-383-38573 (Model H-6000-special)

CALC PM-375
REF 18

PROCESS ENGINEERING INC. Page 2 of 4 PLAISTOW, NEW HAMPSHIRE 03865

MODEL H-6000-SPECIAL

Conversion from inches of water column to liquid volume considers vapor volume with density of 0.28700 lbs/cu.ft. Material shrinkage is 0.00291 Weight and MSCF are for liquid only.

LIQUID NITROGEN @ 1 atm. 50.4020 lbs/cu.ft. 13.803 scf/lb

IN.H20	GALLONS	POUNDS	MSCF	IN.H20	GALLONS	POUNDS	MSCF
0.00	0	0	0.0	45.00	4,298	28,958	399.7
1.00	11	77	1.1	46.00	4,412	29,725	410.3
2.00	39	264	3.7	47.00	4,524	30,484	420.8
3.00	77	517	7.1	48.00	4,636	31,235	431.1
4.00	122	822	11.3	49.00	4,746	31,978	441.4
5.00	174	1,170	16.1	50.00	4,855	32,712	451.5
6.00	231	1,557	21.5	51.00	4,962	33,435	461.5
7.00	294	1,978	27.3	52.00	5,068	34,147	471.3
8.00	361	2,431	33.6	53.00	5,172	34,847	481.0
9.00	432	2,913	40.2	54.00	5,274	35,535	490.5
10.00	508	3,421	47.2	55.00	5,374	36,208	499.8
11.00	587	3,955	54.6	56.00	5,472	36,866	508.9
12.00	670	4,511	62.3	57.00	5,567	37,509	517.7
13.00	755	5,089	70.2	58.00	5,660	38,135	526.4
14.00	844	5,687	78.5	59.00	5,750	38,742	534.8
15.00	936	6,304	87.0	60.00	5,837	39,330	542.9
16.00	1,030	6,938	95.8	61.00	5,921	39,897	550.7
17.00	1,126	7,589	104.8	62.00	6,002	40,442	558.2
18.00	1,225	8,255	113.9				
19.00	1,326	8,936	123.3				
20.00	1,429	9,630	132.9				
21.00	1,534	10,336	142.7				
22.00	1,641	11,054	152.6				
23.00	1,749	11,782	162.6				
24.00	1,858	12,521	172.8				
25.00	1,969	13,268	183.1				
26.00	2,081	14,024	193.6				
27.00	2,195	14,787	204.1				
28.00	2,309	15,557	214.7				
29.00	2,424	16,332	225.4				
30.00	2,540	17,113	236.2				
31.00	2,656	17,898	247.0				
32.00	2,773	18,687	257.9				
33.00	2,891	19,479	268.9				
34.00	3,009	20,273	279.8				
35.00	3,127	21,069	290.8				
36.00	3,245	21,865	301.8				
37.00	3,363	22,662	312.8				
38.00	3,482	23,459	323.8				
39.00	3,600	24,254	334.8				
40.00	3,717	25,047	345.7				
41.00	3,835	25,837	356.6				
42.00	3,951	26,624	367.5				
43.00	4,068	27,407	378.3				
44.00	4,183	28,185	389.0				

25-Jul-90

CALC - PM - 375
REF 18
Page 3 of 4

PROCESS ENGINEERING INC. PLAISTOW, NEW HAMPSHIRE 03865

MODEL H-6000-SPECIAL

Conversion from inches of water column to liquid volume considers vapor volume with density of 3.33560 lbs/cu.ft. Material shrinkage is 0.00291 Weight and MSCF are for liquid only.

LIQUID NITROGEN @ 170 PSIG 39.9292 lbs/cu.ft. 13.803 scf/lb

IN.H20	GALLONS	POUNDS	MSCF	IN.H20	GALLONS	POUNDS	MSCF
4.50	0	0	-0.0	27.50	2,717	14,505	200.2
5.00	6	30	0.4	28.00	2,798	14,933	206.1
5.50	21	112	1.5	28.50	2,878	15,363	212.1
6.00	42	223	3.1	29.00	2,959	15,794	218.0
6.50	67	358	4.9	29.50	3,040	16,225	224.0
7.00	96	513	7.1	30.00	3,121	16,657	229.9
7.50	128	685	9.5	30.50	3,201	17,089	235.9
8.00	164	874	12.1	31.00	3,282	17,521	241.8
8.50	202	1,077	14.9	31.50	3,363	17,953	247.8
9.00	242	1,293	17.9	32.00	3,444	18,385	253.8
9.50	285	1,522	21.0	32.50	3,525	18,817	259.7
10.00	330	1,763	24.3	33.00	3,606	19,248	265.7
10.50	378	2,016	27.8	33.50	3,687	19,678	271.6
11.00	427	2,278	31.4	34.00	3,767	20,108	277.5
11.50	478	2,551	35.2	34.50	3,847	20,536	283.5
12.00	531	2,833	39.1	35.00	3,927	20,963	289.4
12.50	585	3,124	43.1	35.50	4,007	21,389	295.2
13.00	641	3,424	47.3	36.00	4,087	21,813	301.1
13.50	699	3,732	51.5	36.50	4,166	22,235	306.9
14.00	758	4,047	55.9	37.00	4,244	22,655	312.7
14.50	819	4,370	60.3	37.50	4,323	23,073	318.5
15.00	881	4,701	64.9	38.00	4,400	23,489	324.2
15.50	944	5,038	69.5	38.50	4,478	23,902	329.9
16.00	1,008	5,381	74.3	39.00	4,555	24,312	335.6
16.50	1,074	5,731	79.1	39.50	4,631	24,719	341.2
17.00	1,140	6,086	84.0	40.00	4,707	25,123	346.8
17.50	1,208	6,448	89.0	40.50	4,782	25,524	352.3
18.00	1,277	6,814	94.1	41.00	4,856	25,921	357.8
18.50	1,346	7,186	99.2	41.50	4,930	26,314	363.2
19.00	1,417	7,563	104.4	42.00	5,003	26,703	368.6
19.50	1,488	7,944	109.7	42.50	5,075	27,088	373.9
20.00	1,561	8,330	115.0	43.00	5,146	27,468	379.1
20.50	1,634	8,720	120.4	43.50	5,216	27,844	384.3
21.00	1,707	9,114	125.8	44.00	5,286	28,215	389.4
21.50	1,782	9,512	131.3	44.50	5,354	28,580	394.5
22.00	1,857	9,913	136.8	45.00	5,422	28,941	399.5
22.50	1,933	10,318	142.4	45.50	5,488	29,295	404.4
23.00	2,009	10,725	148.0	46.00	5,554	29,644	409.2
23.50	2,086	11,136	153.7	46.50	5,618	29,986	413.9
24.00	2,164	11,550	159.4	47.00	5,681	30,321	418.5
24.50	2,242	11,966	165.2	47.50	5,742	30,650	423.1
25.00	2,320	12,384	170.9	48.00	5,802	30,972	427.5
25.50	2,399	12,805	176.7	48.50	5,861	31,286	431.8
26.00	2,478	13,227	182.6	49.00	5,919	31,592	436.1
26.50	2,558	13,652	188.4	49.50	5,974	31,890	440.2
27.00	2,637	14,077	194.3	50.00	6,029	32,180	444.2

25-Jul-90

CALC PM-375
REF 18
Page 4 of 4

PROCESS ENGINEERING INC. PLAISTOW, NEW HAMPSHIRE 03865

MODEL H-6000-SPECIAL

Conversion from inches of water column to liquid volume considers vapor volume with density of 5.04800 lbs/cu.ft. Material shrinkage is 0.00291 Weight and MSCF are for liquid only.

LIQUID NITROGEN @ 250 PSIG 36.8110 lbs/cu.ft. 13.803 scf/lb

IN.H20	GALLONS	POUNDS	MSCF	IN.H20	GALLONS	POUNDS	MSCF
7.00	0	0	-0.0	29.50	3,190	15,698	216.7
7.50	8	38	0.5	30.00	3,283	16,157	223.0
8.00	27	133	1.8	30.50	3,377	16,616	229.4
8.50	53	262	3.6	31.00	3,470	17,075	235.7
9.00	85	417	5.8	31.50	3,563	17,533	242.0
9.50	121	595	8.2	32.00	3,656	17,991	248.3
10.00	161	793	10.9	32.50	3,749	18,447	254.6
10.50	205	1,008	13.9	33.00	3,841	18,902	260.9
11.00	252	1,240	17.1	33.50	3,933	19,356	267.2
11.50	302	1,488	20.5	34.00	4,025	19,808	273.4
12.00	355	1,749	24.1	34.50	4,117	20,258	279.6
12.50	411	2,024	27.9	35.00	4,208	20,705	285.8
13.00	470	2,311	31.9	35.50	4,298	21,150	291.9
13.50	530	2,610	36.0	36.00	4,388	21,592	298.0
14.00	593	2,920	40.3	36.50	4,477	22,031	304.1
14.50	658	3,240	44.7	37.00	4,565	22,466	310.1
15.00	725	3,570	49.3	37.50	4,653	22,898	316.1
15.50	794	3,909	54.0	38.00	4,740	23,326	322.0
16.00	865	4,258	58.8	38.50	4,826	23,749	327.8
16.50	938	4,614	63.7	39.00	4,911	24,168	333.6
17.00	1,012	4,979	68.7	39.50	4,995	24,582	339.3
17.50	1,087	5,351	73.9	40.00	5,079	24,991	345.0
18.00	1,165	5,731	79.1	40.50	5,161	25,395	350.5
18.50	1,243	6,117	84.4	41.00	5,241	25,792	356.0
19.00	1,323	6,510	89.9	41.50	5,321	26,184	361.4
19.50	1,404	6,909	95.4	42.00	5,399	26,569	366.7
20.00	1,486	7,313	100.9	42.50	5,476	26,947	371.9
20.50	1,569	7,723	106.6	43.00	5,551	27,318	377.1
21.00	1,654	8,138	112.3	43.50	5,625	27,681	382.1
21.50	1,739	8,558	118.1	44.00	5,697	28,036	387.0
22.00	1,825	8,982	124.0	44.50	5,768	28,383	391.8
22.50	1,912	9,411	129.9	45.00	5,836	28,720	396.4
23.00	2,000	9,843	135.9	45.50	5,903	29,048	401.0
23.50	2,089	10,280	141.9	46.00	5,968	29,367	405.3
24.00	2,178	10,719	148.0	46.50	6,030	29,674	409.6
24.50	2,268	11,162	154.1				
25.00	2,359	11,607	160.2				
25.50	2,450	12,055	166.4				
26.00	2,541	12,505	172.6				
26.50	2,633	12,957	178.8				
27.00	2,725	13,411	185.1				
27.50	2,818	13,867	191.4				
28.00	2,911	14,323	197.7				
28.50	3,004	14,781	204.0				
29.00	3,097	15,239	210.3				

25-Jul-90

CALC. PM - 375

REF 20

1 OF 9

ME 327023

PHILADELPHIA ELECTRIC CO.

INSTALLATION INSTRUCTIONS-FISHER CONTROLS CO.
ANALYSIS & DRAWINGS MOD# 1007

PE# 6280 M 117-74-1

PO# ME 327023 PEACHBOTTOM APS

APPROVED FOR RECORD

APPROVED R.A.KING 12/9/83

AND ARE NOT CONTROLLED.
CONSULT DRAWING CONTROL
FOR POSSIBLE LATER

REF. 20
Page 2 of 9

M-117--74

ME- 327023

Type 9200

GLIFFORD B. IVES & CO., INC.
601 CHOTON ROAD
KING OF PRUSSIA, PA. 19406
PHONE (215) 337-4660

Instruction Manual

Type 9200 T-Ring Butterfly Valve Bodies

Form 2432, March 1974

Introduction

The Type 9200, shown in figure 1, is a heavy-duty butterfly valve body designed for stringent shutoff requirements. An elastomer or TFE T-ring seat is used to obtain shutoff. The available construction variations of the Type 9200 are described below. The method of effecting the T-ring seal varies with the type of construction.

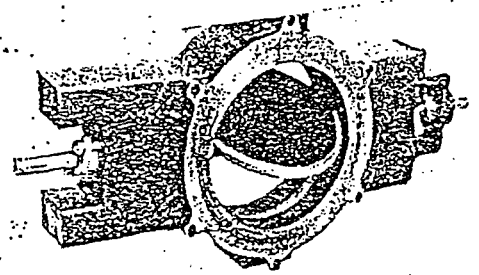

Figure 1. Type 9200 Butterfly Control Valve Body

Specification A—The pressure-activated T-ring is contained in the body as shown in figure 2. External sealing pressure forces the T-ring against the disc periphery only when the disc is closed. There is no contact between the disc and T-ring when the disc is opening or closing. Specification A valves are available with elastomer T-rings only.

Specification B-1—The adjustable elastomer T-ring seat is contained between the body and retaining flange as shown in figure 3. The adjusting set screws and compression ring force the T-ring against the disc periphery to provide interference between the T-ring and disc.

Specification B-2—Similar to Specification B-1 except with TFE T-ring

Specification C-1—The adjustable elastomer T-ring seat is contained in the valve disc as shown in figure 4. The adjusting set screws and compression ring force the T-ring against the body bore to provide interference between the T-ring and body bore seating surface.

Specification C-2—Similar to Specification C-1 except with TFE T-ring

Installation

WARNING

Do not install the valve in systems where the service conditions exceed those for which the valve was designed, or damage to the valve and personal injury may result.

1. Inspect the valve for shipping damage and be certain that the body cavity is free of foreign materials.

2. Clean out adjoining pipelines to remove all foreign material that could damage the valve seat.

3. In those cases where a flow direction arrow is attached to the valve body, install the body so that the flow through the valve will be in the direction indicated. (Although some seat materials and service conditions require flow in one direction only, the Type 9200 is normally capable of flow in either direction and will have no flow arrow attached.)

4. Be certain that the pipeline flanges are in line with each other and that the disc is fully closed before inserting the valve into the pipeline.

CALC PM-375
REF 20
Page 3 of 9

Type 9200

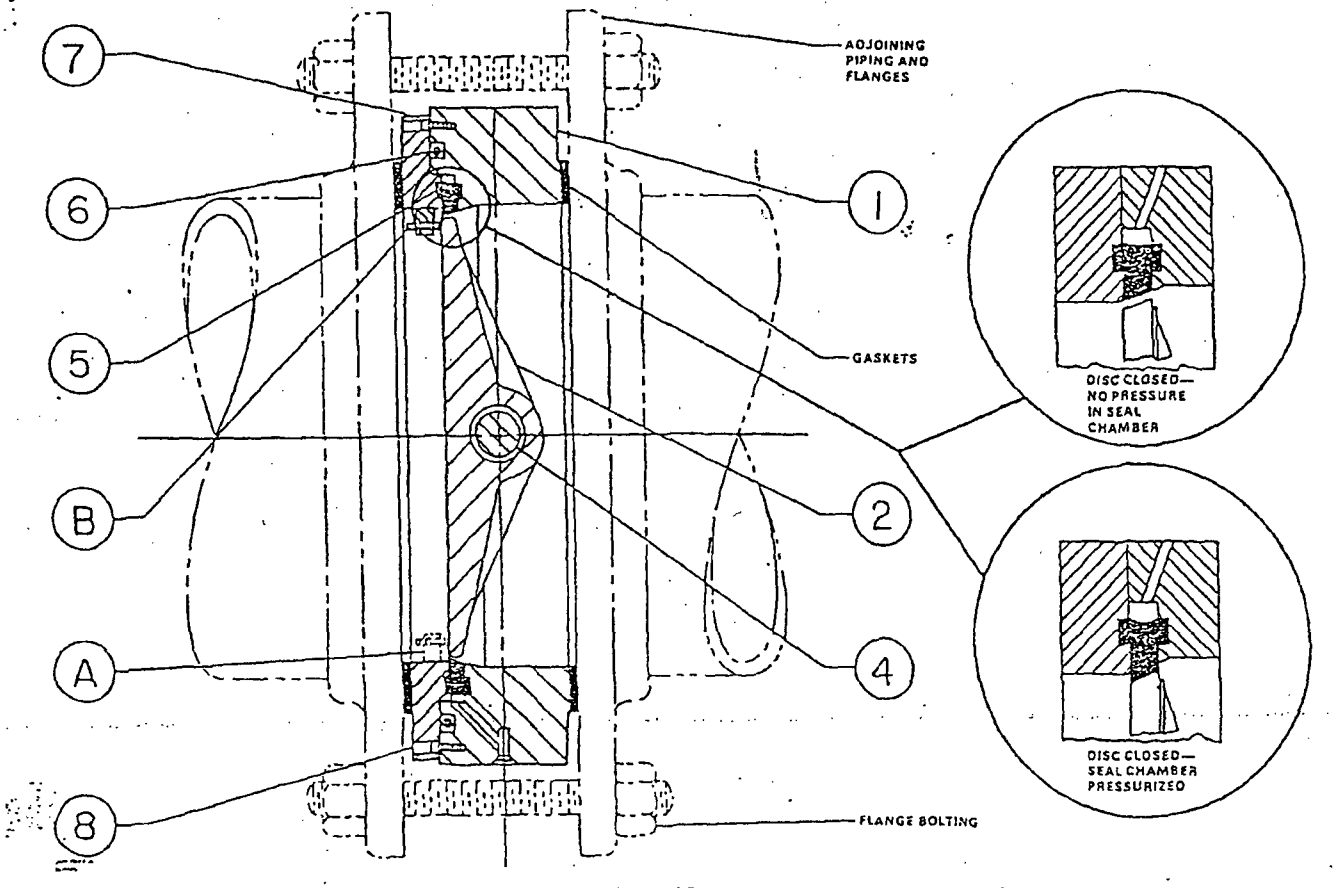

Figure 2. Type 9200 Specification A

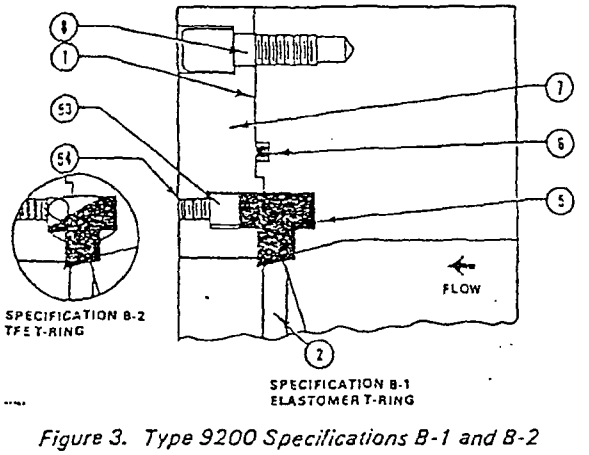

Figure 3. Type 9200 Specifications B-1 and B-2

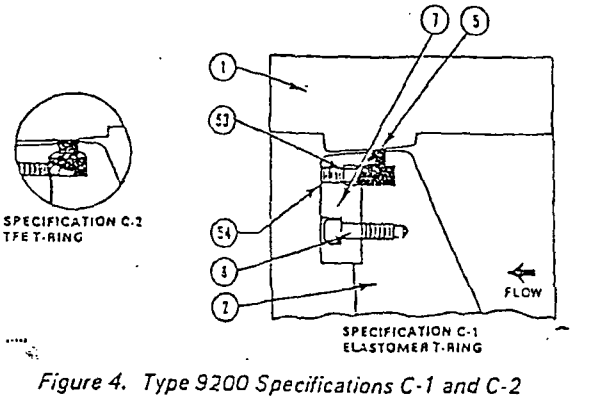

Figure 4. Type 9200 Specifications C-1 and C-2

CAUTION

If the flanges are out of alignment or if the disc is open, difficulties in installation and/or damage to the valve may occur. Be certain that flanges and adjacent piping will not interfere with the opening of the valve disc. Review the dimension drawings to ensure that the inside diameters of the adjacent flanges and piping are large enough to allow disc rotation without interference.

5. Center the valve between the pipe flanges. Although the valve may be installed in any position, the normal position is with the valve shaft horizontal and the actuator vertical above the valve body.

6. Follow accepted piping practices when installing the valve. Provide suitable flange bolting and flange gaskets.

7. If a power actuator is furnished with the valve body, refer to the appropriate actuator instruction manual for information regarding installation and operation of the actuator.

8. If a sealing system is supplied for Specification A constructions, refer to the seal system instructions for operation information.

Specification A Sealing Pressure

Required sealing pressure for Specification A valves is equal to (a) 50 psig or (b) the valve inlet pressure plus one-half the outlet pressure, whichever is greater. Maximum allowable sealing pressure is equal to (a) the maximum allowable pressure of the sealing system being used or (b) 2.5 times the inlet pressure, whichever is lower.

Operation

Specification A

On power-actuated valves when the disc is in the fully closed position, the seal pressure is applied to the back of the elastomer T-ring, forcing the T-ring against the disc periphery. Immediately upon activation of the actuator to open the valve, the seal pressure is released, allowing the disc to leave the seat without any force being exerted on the elastomer T-ring by the disc. The disc is then positioned at the required angle of operation.

When the disc is brought from its open position to its closed position, there is a delay before seal pressure is applied. The sealing system is tripped just as the disc is entering the seal and allows the disc to close fully (completely in the seat) before the seal pressure is applied. This operation is factory adjusted on each valve; if problems arise, the system can be re-adjusted per the seal system instructions.

On valves without power actuators, the sealing pressure must be released with the manually operated loading valve before the valve is opened and re-applied after the valve is closed.

CAUTION

Never apply pressure to the sealing system unless the valve disc is fully closed, or damage to the T-ring may result.

Specifications B-1, B-2, C-1, and C-2

For Specification B-1 and B-2 valves, the valve disc rotates into contact with the T-ring seat on closing. For Specification C-1 and C-2 valves, the valve disc rotates the T-ring into contact with the body bore seating surface on closing. No sealing pressure is required.

Maintenance

WARNING

To avoid personal injury and damage to the process system, isolate the control valve from all pressure and release pressure from the valve body and actuator before disassembling.

Outboard Roller Bearings

If the valve is equipped with outboard roller bearings, lubricate the bearings periodically with a good quality roller bearing grease.

Packing

Key numbers used in this section are shown in figure 5. For valves with lubricating-type packing boxes, lubricate the packing periodically. The frequency of lubrication required depends upon the severity of service conditions.

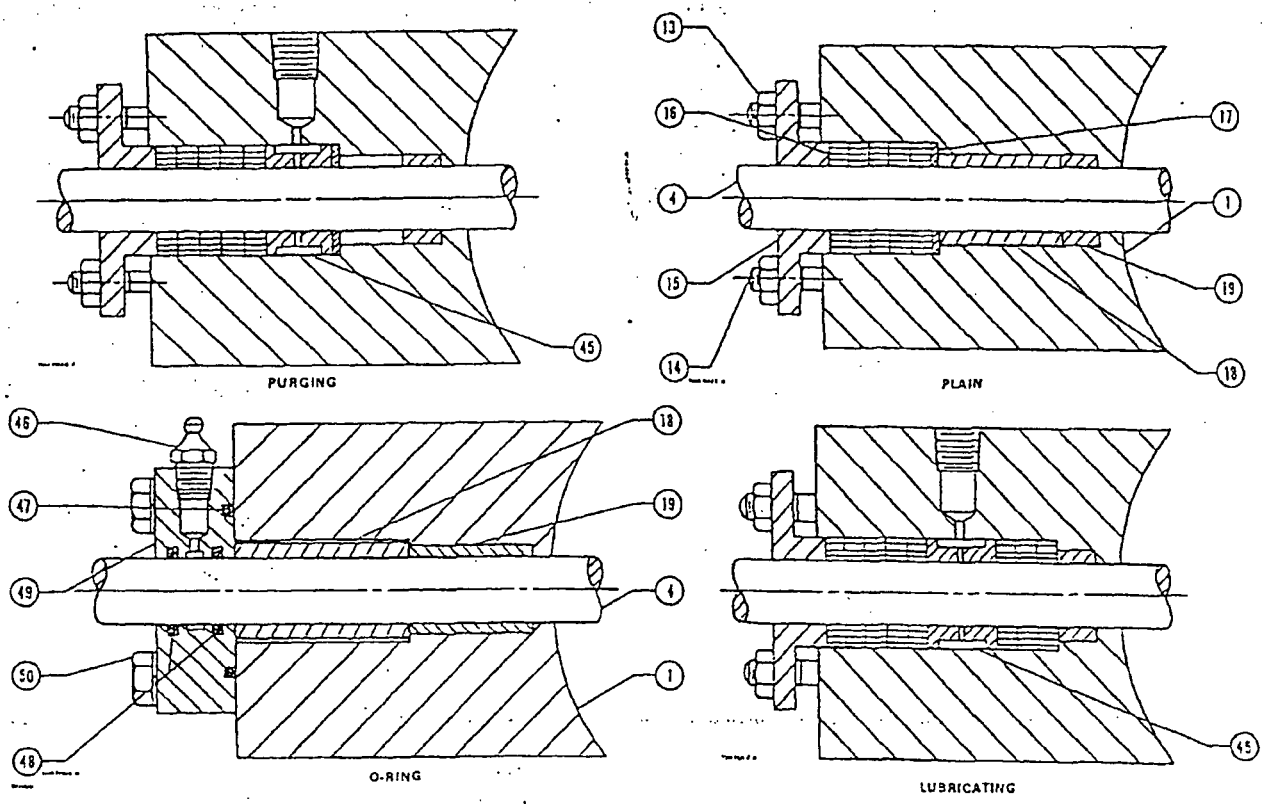

Figure 5. Packing Box Types

It may be necessary to tighten the packing follower nuts (key 13) to stop leakage. If leakage cannot be stopped in this manner, replace the packing per the instructions below.

For split-ring packing, unscrew packing follower nuts (key 13) and slide packing follower (key 15) away from the valve. Remove old packing rings (key 16).

For lubricating packing boxes, remove actuator mounting bracket. Remove lantern ring (key 45) to gain access to the packing rings behind the lantern ring. Place new rings over the valve shaft. When inserting the rings into the packing box, be certain that the split in each ring is positioned 90° from the split in the adjacent ring.

For ring-type packing, remove the actuator and all accessories. Unscrew packing follower nuts (key 13). Remove packing follower and packing rings (keys 15 and 16). For lubricating packing boxes, also remove lantern ring (key 45) to gain access to the packing rings behind the lantern ring. Install new packing rings on the shaft and insert them into the packing box.

For O-ring packing boxes, disassemble the components of the control valve assembly as far as is required to remove the O-ring follower (key 49). Replace O-rings (keys 47 and 48) in the follower as required.

Replacing T-Ring

Specification A

Key numbers used in the following steps are shown in figure 2 except where indicated.

1. Making certain that the valve disc (key 2) is fully closed, remove valve body from pipeline.

2. Note the location of travel stop (key 9, figure 6) on retaining ring (key 7) in respect to the body. This travel stop will be in either location A or B as shown in figure 2 and must be replaced in the same location during reassembly.

3. Unscrew Allen-head cap screws (key 8) and remove retaining ring and T-ring (key 5).

4. Inspect O-ring (key 6). If O-ring requires replacement, remove it from the body.

5. Clean T-ring and O-ring grooves, and coat the new T-ring with a good quality silicone grease.

6. Making certain that the T-ring seat angle matches the disc seat angle (as shown in the inset in figure 2), install the T-ring in the body. Insert the new O-ring if replacement is required.

7. Place retaining ring on the body. Using care to avoid damaging the O-ring (key 6), rotate the retaining ring slightly clockwise and counterclockwise to ensure proper alignment on the T-ring. Be certain the travel stop is positioned in the location noted during disassembly.

8. Replace and tighten Allen-head cap screws (key 8).

9. Replace valve in pipeline per the "Installation" section.

Specifications B-1 and B-2

Key numbers used in the following steps are shown in figure 3 except where indicated.

1. Making certain that the valve disc (key 2) is fully closed, remove valve body from pipeline.

2. Note the location of travel stop (key 9, figure 6) on retaining ring (key 7) in respect to the body. This travel stop will be in either location A or B as shown in figure 2 and must be replaced in the same location during reassembly.

3. Completely loosen adjusting set screws (key 54).

4. Unscrew Allen-head cap screws (key 8) and remove retaining ring, compression ring (key 53), and T-ring (key 5).

5. Inspect O-ring (key 6). If O-ring requires replacement, remove it from the body.

6. Clean T-ring and O-ring grooves. For elastomer T-rings, coat the new T-ring with a good quality silicone grease.

7. Making certain that the T-ring seat angle matches the disc seat angle (as shown in the inset on figure 2), install the T-ring in the body. Insert the new O-ring if replacement is required.

8. Place retaining ring on the body. Using care to avoid damaging O-ring (key 6), rotate the retaining ring slightly clockwise and counterclockwise to ensure proper alignment on the T-ring. Be certain the travel stop is positioned in the location noted during disassembly.

9. Replace and tighten Allen-head cap screws (key 8).

10. Adjust the T-ring per instructions in the "Adjustments" section.

11. Replace valve in pipeline per the "Installation" section.

Specifications C-1 and C-2

Key numbers used in the following steps are shown in figure 4 except where indicated.

1. Making certain that the valve disc (key 2) is fully closed, remove valve body from pipeline.

2. Specification C-1 and C-2 valves may be furnished with a travel stop on the body. This travel stop, if furnished, is not removable.

3. Completely loosen adjusting set screws (key 54).

4. Unscrew Allen-head cap screws (key 8) and remove retaining ring, compression ring, and T-ring (keys 7, 53, and 5).

5. Clean the T-ring groove. For elastomer T-rings, coat the new T-ring with a good quality silicone grease.

6. Making certain that the T-ring seat angle matches the body seat angle, install the T-ring in the disc.

7. Place retaining ring on the disc and rotate the retaining ring slightly clockwise and counterclockwise to ensure proper alignment on the T-ring.

8. Replace and tighten Allen-head cap screws (key 8).

9. Adjust the T-ring per instructions in the "Adjustments" section.

10. Replace valve in pipeline per the "Installation" section.

Replacing Valve Disc

If replacement of the valve disc is required, follow the "Replacing T-Ring" instructions to the point at which the retaining ring and T-ring have been removed. Then proceed with the instructions below. Key numbers used in the following steps are shown in figure 6.

1. Remove actuator, mounting bracket, packing followers (key 15) and packing.

2. If the ends of the taper pins (key 3) are peened, grind off the peened portion. Drive out taper pins.

3. If there is one set of taper pins in the disc, pull shaft (key 4) out of body and remove disc (key 2). Two sets of taper pins indicate that stub shafts are used. Each shaft portion must be pulled out of the body; do not attempt to drive the shaft portions through the disc.

CALC PM-375
REF 20
Page 7 OF 9

(6)

CAUTION

When installing a new disc, also install a new shaft and taper pins. Attempting to use a new disc and old shaft will require drilling new taper pin holes in the shaft, thereby weakening the shaft. The weakened shaft may fail in service. A new shaft may be used with an old disc, using the taper pin holes in the old disc as guides for drilling taper pin holes in the shaft.

4. With inboard bushings (key 19) installed, place valve disc in the body. For large valves, block the body in the horizontal position. Be certain the clearance under the body is equal to at least one-half the disc diameter. With the disc vertical, use a hoist of suitable capacity to place the disc in the body. Be cerain the taper pin holes are on the actuator side of the body.

5. Align the disc shaft hole with the packing box holes in the body.

6. Insert the shaft through the body and disc. Make certain the key seat in the shaft is on the actuator side of the body.

7. Replace bushing retainers and packing box parts (keys 18, 17, 16, 15, and 13).

8. Install taper pins. The disc should be centered in the body bore.

9. Re-install T-ring and retaining ring per instructions in the "Replacing T-Ring" section. For Specifications B-1, B-2, C-1, and C-2, adjust the T-ring per instructions in the "Adjustments" section.

10. Install the valve in the pipeline per instructions in the "Installation" section.

Adjustments

Specifications B-1, B-2, C-1, and C-2 T-Ring

Adjust the T-ring as required to compensate for wear and to retain satisfactory shutoff capability.

1. Rotate valve disc to the fully closed position.

2. Loosen all adjusting set screws (key 54, figure 3 or 4) so that there is clearance between the T-ring and its seating surface at all points around the T-ring.

3. Select one adjusting set screw (key 54) as a starting point and tighten that screw 1/4 turn (clockwise rotation).

4. Moving clockwise around the retaining ring (key 7, figure 3 or 4), tighten each set screw 1/4 turn. Continue until the T-ring contacts its seat at one point.

5. When contact at one point has been made, return to the set screw selected as the starting point. Move around the retaining ring in a clockwise pattern, and wherever there is clearance between the T-ring and its seat, tighten the set screw at that point 1/4 turn. Bypass any screws where the T-ring is in contact with its seat.

6. When contact has been made at all points on the T-ring, tighten each set screw on Specifications B-1 and C-1 an additional 1/4 turn. No further tightening is required on specifications B-2 and C-2.

7. Replace the valve in the pipeline per instructions given in the "Installation" section.

Double-Thrust Bearings

It is unlikely that the thrust bearings will require adjustment. If it does become necessary to adjust the bearings, proceed as follows. Key numbers used in the following steps are shown in figure 6.

1. Making certain the valve disc is in the closed position, remove valve from pipeline.

2. Loosen the screws found in each clamp-type collar (key 27).

3. With the valve disc closed, center the disc in the body bore.

4. With the valve disc centered, position one clamp-type collar against each end of the bearing bracket (key 21) hub. Then, tighten the screw in each collar.

5. For Specifications B-1, B-2, C-1, and C-2 valves, adjust T-ring per the procedure above if the adjustment was disturbed in centering the disc.

6. Replace the valve in the pipeline per the "Installation" section.

Actuator Linkage

Due to the large number of different types of actuators that can be used with the Type 9200, it is not practical to present detailed instructions for the various types. However, to simplify this adjustment and to ensure proper valve disc closure, an internal travel stop is normally furnished with the valve. When checking or adjusting the linkage, the disc may be closed until contact is made with this travel stop. Adjust linkage to close the disc to this point.

(17) CALC. PM-375
Ref 20
Page 8 of 9

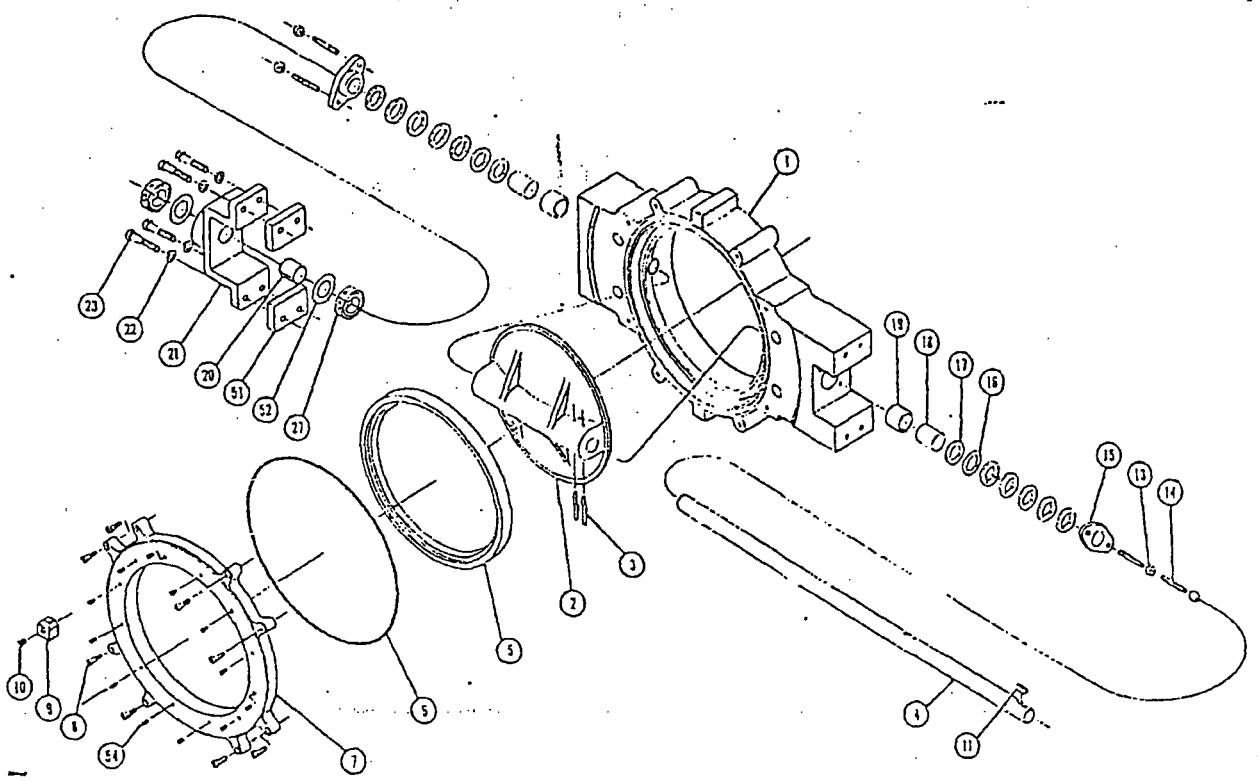

Figure 6. Type 9200

Ordering Replacement Parts

To order replacement parts, specify the key number and name of each part required from the "Parts Reference" section. Also state the original material of the part, if known, the desired quantity, valve type number, size, serial number, and all other pertinent nameplate information. The correct part will be selected based on this information.

In all correspondence with the sales representative, mention the serial number of the valve.

Parts Reference

Key	Part Name
1	Body
2	Valve Disc
3*	Taper Pin
4	Valve Shaft
5*	T-Ring
6*	O-Ring (Specifications A, B-1, and B-2 only)
7	Retaining Ring
8	Allen-Head Cap Screw
9	Travel Stop
10	Set Screw
11*	Key
13	Packing Follower Nut
14	Packing Follower Stud
15	Packing Follower
16*	Packing Ring
17*	Packing Washer
18	Retainer Bushing
19	Inboard Bushing
20	Bushing
21	Bearing Bracket
22	Lock Washer
23	Hex Head Screw
27	Clamp-Type Collar
45	Lantern Ring (Lubricating and purging packing boxes only)
46	Fitting (O-ring packing boxes only)
47*	O-Ring (O-ring packing boxes only)
48*	O-Ring (O-ring packing boxes only)
49	O-Ring Follower (O-ring packing boxes only)
50	Hex Head Bolt (O-ring packing boxes only)
51	Spacer Block
52	Washer
53	Compression Ring (Specifications B-1, B-2, C-1, and C-2 only) —
54	Adjusting Set Screw Specifications B-1, B-2, C-1, and C-2 only)

*Recommended Spare Part

(17) CALC PM-375
REF. 20
Page 9 of 9

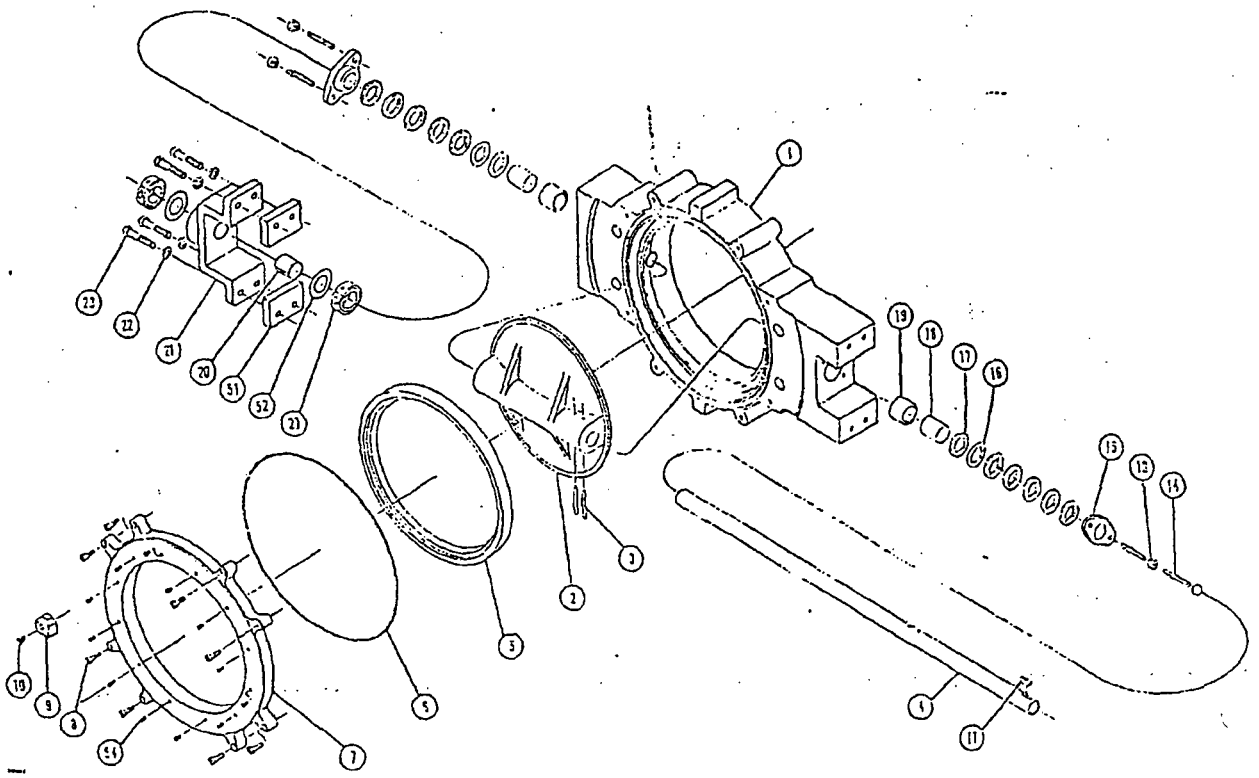

Figure 6. Type 9200

Ordering Replacement Parts

To order replacement parts, specify the key number and name of each part required from the "Parts Reference" section. Also state the original material of the part, if known, the desired quantity, valve type number, size, serial number, and all other pertinent nameplate information. The correct part will be selected based on this information.

In all correspondence with the sales representative, mention the serial number of the valve.

Parts Reference

Key	Part Name
1	Body
2	Valve Disc
3*	Taper Pin
4	Valve Shaft
5*	T-Ring
6*	O-Ring (Specifications A, B-1, and B-2 only)
7	Retaining Ring
8	Allen-Head Cap Screw
9	Travel Stop
10	Set Screw
11*	Key
13	Packing Follower Nut
14	Packing Follower Stud
15	Packing Follower
16*	Packing Ring
17*	Packing Washer
18	Retainer Bushing
19	Inboard Bushing
20	Bushing
21	Bearing Bracket
22	Lock Washer
23	Hex Head Screw
27	Clamp-Type Collar
45	Lantern Ring (Lubricating and purging packing boxes only)
46	Fitting (O-ring packing boxes only)
47*	O-Ring (O-ring packing boxes only)
48*	O-Ring (O-ring packing boxes only)
49	O-Ring Follower (O-ring packing boxes only)
50	Hex Head Bolt (O-ring packing boxes only)
51	Spacer Block
52	Washer
53	Compression Ring (Specifications B-1, B-2, C-1, and C-2 only)
54	Adjusting Set Screw Specifications B-1, B-2, C-1, and C-2 only)

*Recommended Spare Part

CALC PM-375
REF 23

1902023980

Pg. 1 of 1

PBAPS ALARM RESPONSE CARD

WINDOW LOCATION

	A	B	C	D	E
1					
2					
3					
4					
5			X		

ALARM WORDING

SGIG
HEADER
HI-LOW
PRESSURE

AUTOMATIC ACTIONS:

NONE

NOTE: If Instrument air is lost the containment purge and vent butterfly valves may lose boot seal pressure. This will result in split valve position indication and possible loss of containment integrity.

OPERATOR ACTIONS:

1. At the CAD building, valve in the standby regulator and valve out in-service regulator.
2. Check SGIG header pressure at PI-9702.
3. If pressure is low check for gross N_2 leaks local to SGIG users. Refer to GOL 16B.1.A-3 for SGIG user locations.
4. Refer to Tech Specs for LCO's.

CAUSE:

1. N_2 leak local to SGIG user
2. Loss of CAD tank pressure
3. Malfunction of PCV-7651A(B)

ALARM SETPOINT:
80 psig decreasing
100 psig increasing

ACTUATING DEVICE(S):
PS-9702 decreasing
PS-90059 increasing

ALARM RESET:

AUTO

REFERENCES:

E-250 M-372

ARC NUMBER: 329

30C284 C-5

Rev. 1

11/19/89

ORIGINAL

PHILADELPHIA ELECTRIC COMPANY SERVICE
QUALITY ASSURANCE

PBAPS UNIT 2 & 3
Project

TELECON RECORD

File No.:
INFO 7

FROM TAPAN K. BANERJEE (Name) PECO-NED (Organization) TO R. NESBILT (Name) GE - SAN JOSE (Organization) 408-925-6986

DATE 7-25-90 TIME 2:00 PM

SUBJECT: PBAPS UFSAR Fig No. 5.2.14 MAXIMUM TOTAL NITROGEN REQUIRED FOR DILUTION VERSUS TIME FOLLOWING A LOCA (ZERO CONTAINMENT LEAKAGE)

DISCUSSION SUMMARY (Commitments, Problems, Agreements, Etc.)

Mr. Nesbilt performed a quick calculation (very preliminary and unverified) based on PBAPS containment design (mark I BWR) and provided me with the following information:

Total Nitrogen required at the end of 7 days (from t = 0), following a LOCA, to maintain the Oxygen level below 5 % concentration = 191,000 SCF

He indicated that O_2 generation at the end of 1st day is 3,035 SCF and at the end of 7th day is 13,700 SCF. H_2 is also generated simultaneously. The H_2 dilution has been considered in calculating the total N_2 volume required over 7 days following a LOCA. He indicated that if PECO desires, GE can provide PECO with a detailed calculation on this subject.

COPY TO:
J G Hufnagel File - CAD System.
Linda Mast

CALC PM-375
REF. 26
Pg. 1 of 4

BETTIS
A Galveston-Houston Company

Heavy-Duty Product Series: Pneumatic Actuators

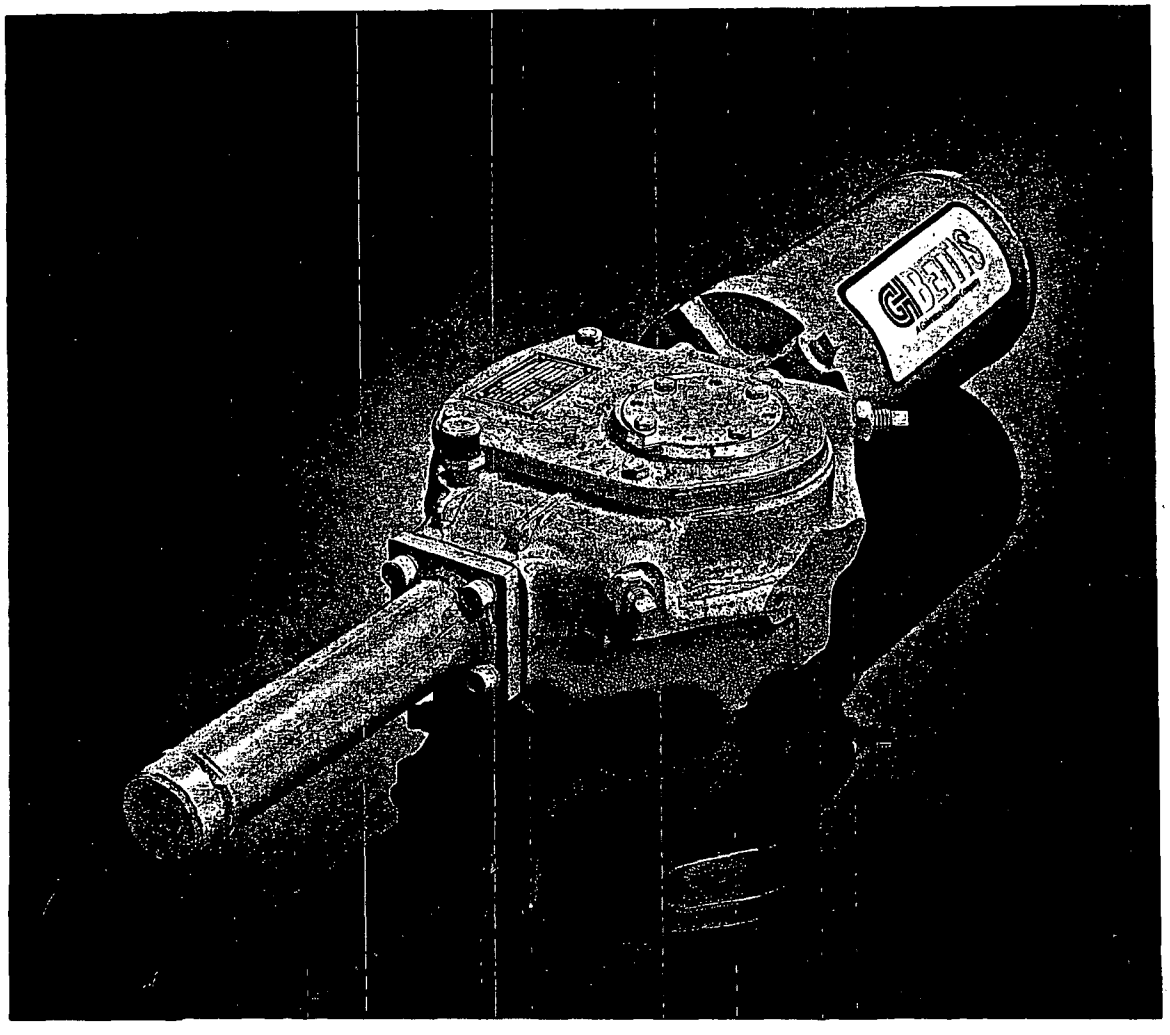

CALC PM-375
REF. 26
Pg. 2 of 4

GH BETTIS
A Galveston-Houston Company

Headquarters
P.O. Box 508
Waller, Texas 77484
Tel: 713/463-5100
Fax: 713/463-5103
Tlx: 6868048

GH-Bettis Actuators & Controls Ltd.
Brunel Way
Fareham, Hants
PO15 5SA, ENGLAND
Tel: 0489 885333
Fax: 0489 885200
Tlx: 47493G

GH-Bettis, Ltd.
5638 88th Street, Bay #3
Edmonton, Alberta T6E 5R8
CANADA
Tel: 403/465-5251
Fax: 403/468-2112
Tlx: 0373573

Compagnie Auxiliare Industrielle (CAI)
57, 59 Rue Etienne-Marcel
93100 Montreuil, France
Tel: 48 57 02 41
Fax: 48 59 27 98
Tlx: 230409

Important: Due to GH-Bettis' continuing commitment to engineered product advancement, data presented herein is subject to change.

© 1989 Galveston-Houston Company. All rights reserved.
GHB 89017/5M/4-89

CALC PM-375
REF. 26
Pg. 3 of 4

T-Series

Actuator Model	Displ. per Stroke in³	Displ. per Stroke ft³	Actuator Spring Size SR5	SR4	SR3	SR2	SR1	Max. Allowable Operating Pressure** (psig)	Actuator Spring Size SR5	SR4	SR3	SR2	SR1	Appx. Wt. Manual Override (lbs)
			Max. Operating Pressure* (psig)						Appx. Wt. of Actuator (lbs)					
T-310-SR	465	.269	210	220	235	250	300	250†	337	332	326	426	494	
T-312-SR	665	.385	150	155	165	175	200	225	423	418	412	512	580	
T-316-SR	1 066	.617	—	95	105	110	130	130	471	466	460	560	628	
T-410-SR	661	.383	290	315	315	315	—	325	378	373	473	542	533	100
T-412-SR	946	.547	200	220	220	220	220	225	409	405	505	573	565	
T-416-SR	1 516	.877	125	135	135	135	135	150	457	453	553	621	612	
T-420-SR	2 399	1.388	—	85	85	85	85	90	530	526	626	694	685	
T-510-SR	905	.524	—	415	420	500	550	550	—	815	800	970	1 170	
T-512-SR	1 296	.750	—	290	330	350	400	400	—	875	860	1 030	1 230	
T-516-SR	2 080	1.204	—	175	180	220	240	250	—	1 033	1 016	1 193	1 425	
T-520-SR	3 295	1.907	—	115	115	135	150	150	—	1 170	1 152	1 330	1 562	120
T-812-SR	1 885	1.091	360	400	400	400	—	400	980	1 163	1 135	1 335	—	
T-816-SR	3 025	1.751	250	250	250	250	—	250	1 133	1 299	1 274	1 506	—	
T-820-SR	4 793	2.774	150	150	150	150	—	150	1 233	1 419	1 393	1 626	—	

*Maximum operating pressure is the pressure required to produce the maximum rated torque of the actuator.

**Maximum allowable operating pressure is the maximum static pressure that may be applied to a fully stroked actuator against the travel stops. Pressures applied to only one end of the cylinder in excess of the maximum allowable operating pressure may result in permanent deformation of the torque-producing mechanism of the actuator. Maximum pneumatic test pressure is 1.25 times the maximum allowable operating pressure when applied to both sides of the cylinder simultaneously.

†Except when maximum operating pressure is higher.

Sizing Information

The following information is designed to aid in sizing Bettis heavy-duty pneumatic actuators to specific valve requirements.

An accurate maximum torque requirement must be obtained. Most valve manufacturers publish normal valve stem torque requirements and torque correction factors for unusual applications or extreme operating conditions. Normal stem torque for a properly applied and maintained valve is generally defined as the maximum torque required to rotate the valve element (ball, disc, plug, etc.) from its fully closed position when the element is against the full valve-rated differential pressure. Because the features of each valve make and model are unique, torque correction factors must be provided by the manufacturer. Adjustments are usually made relative to differential pressure, extreme temperatures, unusual loadings and operating speed requirements. For accurate torque requirements, all information pertinent to the valve application, including size, model, figure number and nominal pressure rating, must be furnished to the valve manufacturer.

When an accurate maximum torque requirement is obtained, further consideration must be given to the valve type, design and application to determine whether the requirement is valid only at the beginning and/or end of each stroke or at an intermediate position.

GH-Bettis double-acting Scotch-yoke actuators can then be appropriately selected from torque output charts in accordance with their guaranteed minimum break or run (mid-stroke) output torque.

Bettis spring-return Scotch-yoke actuators may be selected using the published, guaranteed minimum, ending torque output values except when the maximum requirement is at an intermediate position of the piston stroke. In these cases, select an actuator having an ending torque at least 25 percent greater than the torque requirement for the intermediate position. Note: The 25 percent adjustment is not to be considered a "safety factor." This ending torque adjustment, applied to the spring-return, Scotch-yoke-type actuator, assures an intermediate position torque output equal to or greater than the requirement. (See page 7, fig. 2.)

CALC PM-375
REF. 26
Pg. 4 of 4

T-3, T-4, T-5, T-8 Spring-Return

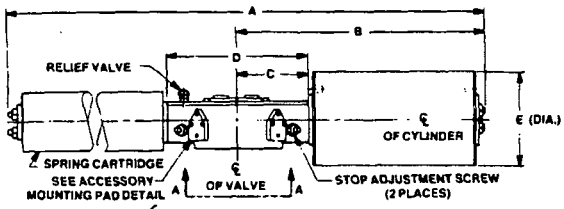

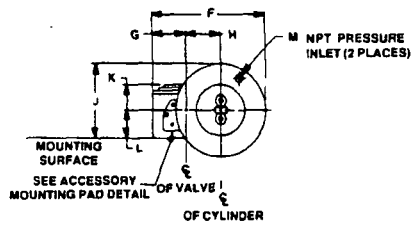

Actuator Model	Spring Size SR1	SR2	SR3	SR4	SR5	B	C	D	E	F	G	H	J	K	L	M (NPT)
	Dimension A															
T-310-SR	69¼	62 9/16	61⅛	61⅛	65¼	23 9/16	6 9/16	12⅝	11	11 15/16	3⅝	2 13/16	9 7/16	3 13/16	3 15/16	½
T-312-SR									13	12 15/16			10 7/16			½
T-316-SR									16¼	14 9/16			12 1/16			¾
T-410-SR	79 9/16	83 3/16	74 7/16	76 9/16	79 9/16	25¾	8½	17	11	14⅛	4⅝	4	9 11/16	4 3/32	4 7/16	½
T-412-SR									13	15⅛			10 11/16			½
T-416-SR									16¼	16¾			12 9/16			¾
T-420-SR									20¼	17¾			14 9/16			¾
T-510-SR	122 9/16	112⅜	98 3/16	104 13/16	—	34 9/16	12	24	11	19⅛	7 3/16	5½	10 9/16	4	4 13/16	½
T-512-SR									13	19⅞			11 9/16			½
T-516-SR									16¼	21 7/16			12 15/16			¾
T-520-SR									20¼	23 7/16			14 13/16			¾
T-810-SR	—	133½	123½	132½	115¾	42 15/16	15	30	11	23 9/16	7 13/16	8	9 11/16	4 3/16	4 3/16	½
T-812-SR									13	23 9/16			10 11/16			½
T-816-SR									16¼	23 15/16			12 9/16			¾
T-820-SR									20¼	25 13/16			14 9/16			¾

T-3, T-4, T-5, T-8 Spring-Return with M7 Hydraulic Override

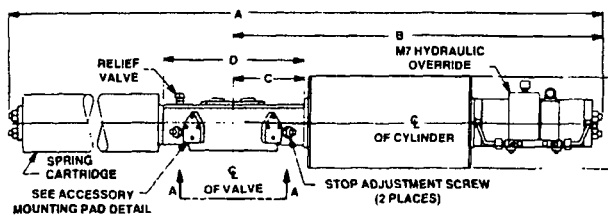

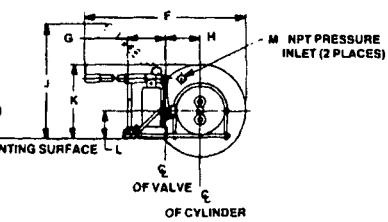

Actuator Model	Spring Size SR1	SR2	SR3	SR4	SR5	B	C	D	E	F	G	H	J	K	L	M (NPT)
	Dimension A															
T-310-SR-M7	84¼	75⅛	77⅛	77⅛	80¼	38 13/16	6 9/16	12⅝	11	36 23/32	3⅝	2 13/16	34	9 7/16	3 15/16	½
T-312-SR-M7									13	37 23/32				10 7/16		½
T-316-SR-M7									16¼	39 13/32				12 1/16		¾
T-410-SR-M7	94 9/16	98 9/16	89 7/16	91 11/16	94 9/16	41⅛	8½	17	11	36 23/32	4⅝	4	35	9 11/16	4 3/16	½
T-412-SR-M7									13	37 23/32				10 11/16		½
T-416-SR-M7									16¼	39 13/32				12 9/16		¾
T-420-SR-M7									20¼	41 13/32				14 9/16		¾
T-510-SR-M7	142½	132 9/16	118⅛	124¾	—	55⅛	12	24	11	37 11/32	7 3/16	5½	34 13/16	10 9/16	4 13/16	½
T-512-SR-M7									13	37 11/32				11 9/16		½
T-516-SR-M7									16¼	39 13/32				12 15/16		¾
T-520-SR-M7									20¼	41 13/32				14 13/16		¾
T-810-SR-M7	—	160⅜	150⅛	159⅛	142⅜	70	15	30	11	37 21/32	7 13/16	8	34 3/16	9 11/16	4 3/16	½
T-812-SR-M7									13	37 21/32				10 11/16		½
T-816-SR-M7									16¼	39 7/16				12 9/16		¾
T-820-SR-M7									20¼	41 13/32				14 9/16		¾

All dimensions are in inches.

T-8

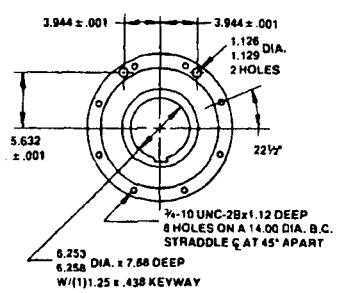

Accessory Mounting Pad Detail

T-3, T-4, T-8

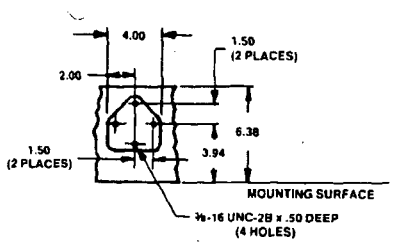

T-5

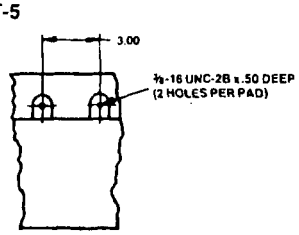

Certified dimensional drawings available on request. Contact factory with correct model designation and serial number.

FILE

GILBERT/COMMONWEALTH

TELEPHONE AND CONFERENCE MEMORANDUM

DATE MAR. 23, 1992

BY: Roy Steward

WORK ORDER NO. 046294003

TELEPHONE CALL ☒ CONFERENCE ☐

WITH: Leon Berckenhoff 713-463-5100

COMPANY: GH Bettis

SUBJECT: MOD 5236

NOTES:

Called Leon requesting information on the Model T-420-SR actuator displacement volume, the following was received:

Actual actuator volume measured by Bettis for this model actuator was 2980 in^3 (1.72 ft^3). This volume includes actuator piston stroke displacement plus dead space volume within the cylinder and tubing lines.

Copies To:

W.L. Dobson
J.T. Zalewski
M. Maher

CALC PM-375
REF. 27
Pg. 1 OF 1

GAI - 203 9/84

CALC PM-375
ATTACHMENT I
PAGE 1 OF 18

STONE & WEBSTER ENGINEERING CORPORATION
3 EXECUTIVE CAMPUS, P. O. BOX 5200
CHERRY HILL, NEW JERSEY 08034

DATE	September 21, 1992
J. O. NO.	03040.242
P. O. NO.	
LTR. NO.	STP- 2030
REF.	

VIA

TO
Philadelphia Electric Company
Attention: Mr. G. V. Cranston
Manager of Nuclear Engineering Dept.
c/o Document Control Center 61B-3
965 Chesterbrook Blvd.
Wayne, PA 19087-5691

DEAR SIRS:

THE FOLLOWING ARE ☐ ATTACHED: ☐ SENT SEPARATELY:

___ COPIES ___ PRINTS ___ REPRODUCIBLES ___ MICROFILM APERTURE CARDS
EACH OF
☐ DRAWINGS ☐ SPECIFICATIONS
☒ DOCUMENTS ☐ NOTES OF CONFERENCE

STATUS		PLEASE NOTE		SENT FOR YOUR	
☐ FINAL	☐ APPROVED	☐ REVISIONS	☐ OMISSIONS	☐ APPROVAL	☒ COMMENT
☐ PRELIMINARY	☐ APPROVED AS REVISED (AS DEFINED IN SPECIFICATION)	☐ ADDITIONS	☐ CORRECTIONS	☐ USE	☐ INFORMATION
☐ NO COMMENT	☐ UNACCEPTABLE	☐ COMMENTS	☐	☐ FILES	☐ CONCURRENCE
☐ SUGGESTIONS AS NOTED	☐			☐	

YOUR ATTENTION IS DIRECTED TO THE FOLLOWING:

RELEASED FOR: ☐ FABRICATION ☐ PURCHASE OF NECESSARY MATERIALS

☐ PLEASE REVISE AND SUBMIT ___ PRINTS ___ REPRODUCIBLES ___ MICROFILM APERTURE CARDS.

☐ PLEASE SUBMIT ___ PRINTS ___ REPRODUCIBLES ___ MICROFILM APERTURE CARDS OF ☐ DOCUMENTS ☐ DRAWINGS ☐ SHOP DETAIL

☐ PLEASE RETURN ONE COPY EACH OF THIS MATERIAL BEARING YOUR APPROVAL OR COMMENTS.

☐ PLEASE ACKNOWLEDGE RECEIPT OF THIS MATERIAL BY SIGNING AND RETURNING THE ENCLOSED COPY OF THIS FORM.

☐ WE TRUST THAT THESE NOTES ARE IN ACCORDANCE WITH YOUR UNDERSTANDING: IF NOT, PLEASE ADVISE US.

IMPORTANT SHOULD ANY REVISION TO DOCUMENTS OR DRAWINGS RETURNED HEREWITH INVOLVE A PRICE INCREASE, THE SUPPLIER MUST NOTIFY STONE & WEBSTER PURCHASING DEPARTMENT WITHIN TEN (10) DAYS EVEN THOUGH A DEFINITE ESTIMATE CANNOT BE GIVEN AT THE TIME. OTHERWISE, THE PURCHASER WILL CONSIDER THE REVISIONS MADE WITHOUT COST.

TASK NUMBER 9182128249
SGIG GENERIC ISSUES
DRAFT RESPONSE TO ITEM 1A
SSFI ACTION ITEM NO. SFIP92-08, Rev. 0
PEACH BOTTOM ATOMIC POWER STATION

The Subject Draft response to Item 1a is being delivered to Mr. E. Epstein. Per discussion with E. Epstein, no revision to Calculation PM-375 is to be performed at this time. Calculation PM-375 will be revised in the future to incorporate this item (Item 1a) and other SSFI open items.

If you should have any questions, please call the undersigned at (609) 482-3866.

M. K. Allen
M. K. Allen
Senior Task Manager

Copy to: GVCranston
FCook
EEpstein (orig. enc)
JHufnagel
16-81

▲029.5G

DRAFT

SSFI ACTION ITEM

Action Item No.: SFIP92-08, Rev. 0

PART II - RESPONSE (Item 1a only)

1. The potential concern/question presented has been reviewed and the following response is provided:

   The potential discrepancy addressed in Item 1a is that the Fisher Model 95H Pressure Control valve (PCV) with a 1 inch orifice will allow increased flow through the failed regulator and subsequently lose the required nitrogen inventory from the CAD tank for the combined limiting demand of the SGIG and the CAD systems for dual unit operation.

   A review of the piping arrangement of the PCV portion of the SGIG system (Refer. Dwg. M-372, Sh. 1) shows that there are 3/4 inch isolation valves upstream and downstream of the PCV. These valves have an orifice size of 0.312 inches (Refer. NUPRO Catalog #N-390-3).

   An evaluation (Attachment I) was made to determine the impact on the required nitrogen inventory to sustain a failed PCV for a 4-hour period using the PCV with a 1 inch orifice. The evaluation determined that the isolation valves (in series) at the inlet and outlet of the PCV are the limiting components of system flow in the event of a failed PCV regulator. The evaluation concluded that the calculated results on Section G on pages 22 and 23 of Calc. PM-375 are not affected by the use of Fisher Model 95H valve with 1 inch orifice.

2. Additional documents/information are provided in support of Item 1, above (list).

   Attachment I - Evaluation of Impact on N_2 Inventory Using PCV With 1 Inch Orifice

   Drawing M-372, Sh. 1, Rev. 44

   Nupro Catalog No. N-390-3, April 1990.

3. Item reviewed for hardware nonconformance requiring implementation of NGAP-03N001, Control of Hardware nonconformances. NCR issued: ( ) Yes, (X) No. NCR No. (not applicable)

Approval Signature/Date

DRAFT

SSFI ACTION ITEM

Action Item No.: SFIP92-08, Rev. 0

PART II - RESPONSE (Item 1a only)

1. The potential concern/question presented has been reviewed and the following response is provided:

   The potential discrepancy addressed in Item 1a is that the Fisher Model 95H Pressure Control valve (PCV) with a 1 inch orifice will allow increased flow through the failed regulator and subsequently lose the required nitrogen inventory from the CAD tank for the combined limiting demand of the SGIG and the CAD systems for dual unit operation.

   A review of the piping arrangement of the PCV portion of the SGIG system (Refer. Dwg. M-372, Sh. 1) shows that there are 3/4 inch isolation valves upstream and downstream of the PCV. These valves have an orifice size of 0.312 inches (Refer. NUPRO Catalog #N-390-3).

   An evaluation (Attachment I) was made to determine the impact on the required nitrogen inventory to sustain a failed PCV for a 4-hour period using the PCV with a 1 inch orifice. The evaluation determined that the isolation valves (in series) at the inlet and outlet of the PCV are the limiting components of system flow in the event of a failed PCV regulator. The evaluation concluded that the calculated results on Section G on pages 22 and 23 of Calc. PM-375 are not affected by the use of Fisher Model 95H valve with 1 inch orifice.

2. Additional documents/information are provided in support of Item 1, above (list).

   Attachment I - Evaluation of Impact on N_2 Inventory Using PCV With 1 Inch Orifice

   Drawing M-372, Sh. 1, Rev. 44

   Nupro Catalog No. N-390-3, April 1990.

3. Item reviewed for hardware nonconformance requiring implementation of NGAP-03N001, Control of Hardware nonconformances. NCR issued: ( ) Yes, (X) No. NCR No. (not applicable)

Approval Signature/Date

▲5010.65

CALCULATION IDENTIFICATION NUMBER				
J.O. OR W.O. NO. 03040.2421	DIVISION & GROUP MECHANICAL	CALCULATION NO. ATTACHMENT I	OPTIONAL TASK CODE —	PAGE 4 of 15

PREPARER: R Gorpuna (SWEC) 9-21-92

REVIEWER: J Litton (SWEC) 9-21-92

CALCULATION OBJECTIVE:

EVALUATE THE IMPACT ON THE REQUIRED NITROGEN INVENTORY TO SUSTAIN A FAILED PRESSURE CONTROL VALVE (PCV) AND RESULTING LOSS OF NITROGEN FOR A 4-HR PERIOD USING FISHER MODEL 95H VALVES WITH 1" ORIFICE PER MOD 1316 IN LIEU OF PCV WITH 1/4" ORIFICE AS ORIGINALLY CALCULATED ON PAGES 22 & 23 OF CALC. PM-375.

NOTE: THE FOLLOWING BACKGROUND IS INCLUDED FOR A BETTER UNDERSTANDING OF THIS CALCULATION (ATTACHMENT I). SSFI ACTION ITEM NO. SFIP92-08, Rev. 0 (ITEM 1a) IDENTIFIED A POTENTIAL CONCERN REGARDING INCREASED FLOW THROUGH A FAILED-OPEN PCV. SECTION G ON PAGE 22 OF CALC. PM-375 ASSUMES A FLOW RATE OF 150 SCFM BASED ON MODELING THE FAILED REGULATOR AS A 1/4" ORIFICE WITH 150 PSIG DIFFERENTIAL PRESSURE ACROSS IT (SEE CALC. REF. 13). PER MOD 1316 (REFER. CALC. PM-386), THE LINDE PRESSURE CONTROL VALVES (WITH THE 1/4" ORIFICE UPON WHICH THE FAILED PCV FLOW RATE WAS BASED) HAVE SUBSEQUENTLY BEEN REPLACED WITH FISHER MODEL 95H VALVES WHICH UTILIZE A 1" ORIFICE. FROM CALC. REFER. 13, FLOW THROUGH THE FAILED REGULATOR INCREASES BY A FACTOR OF APPROXIMATELY 15 (AT THE SAME DIFFERENTIAL PRESSURE) DUE TO THE INCREASE IN ORIFICE SIZE FROM 1/4" TO 1" (150 SCFM TO 2338 SCFM).

IF THIS FLOW IS COMPLETELY PASSED BY THE DOWNSTREAM RELIEF VALVES AND WERE ALLOWED TO CONTINUE UNMITIGATED FOR 4 HOURS, THE RESULTANT NITROGEN INVENTORY REQUIRED TO COMPENSATE FOR THIS LOSS WOULD INCREASE SUBSTANTIALLY AND WOULD EXCEED THE CAPABILITY OF THE CAD TANK.

NOTE (CONT'D):

UTILIZATION OF THIS CALCULATION (ATTACHMENT I) BY PERSONS WITHOUT ACCESS TO THE PERTINENT FACTORS AND WITHOUT PROPER REGARD FOR ITS PURPOSE COULD LEAD TO ERRONEOUS CONCLUSIONS. SHOULD IT BECOME DESIRABLE TO USE THIS CALCULATION TO SUPPORT DESIGN OR STATION ACTIVITIES OTHER THAN THOSE EXPLICITLY SPECIFIED IN THIS SECTION, THE RESPONSIBLE ENGINEERING BRANCH (AS NOTED IN BLOCK 4 OF THE PECO COVER SHEET) SHALL BE CONTACTED TO ENSURE THAT THE PURPOSES, ASSUMPTIONS, JUDGEMENTS, AND LIMITATIONS ARE THOROUGHLY UNDERSTOOD.

REFERENCES: (IN ADDITION TO REFERENCES IDENTIFIED ON PAGES 6,7 & 7a OF CALC. PM-375)

A.) DWG. M-3189, SH.1, REV. 11, "N_2 SUPPLY TO CAD SYSTEM VALVES ELEV'S. 116'-0", 135'-0", 165'-0" & 195'-0" AREAS 7,8 & 9, PBAPS UNIT 2 & COMMON."

B.) DWG. M-3184-3.BM, SHT. 1, "IMPROVEMENTS FOR CONTAINMENT ATMOSPHERIC SYSTEMS, PBAPS UNITS 2 & 3." FOR MARK NO. 1003, NUPRO SS-8UW-TW, 3/4" BELLOWS VLV.

C.) NUPRO CATALOG # N-390-3, APRIL 1990. (ATTACHED PGS. 8-13)

D.) TELE-CON NOTE, 9-16-92, R. CORPUS / B. LUTZ (ATTACHED PGS. 14-15)

E.) DWG. M-372, SH.1, REV. 44, "P & ID CONTAINMENT ATMOSPHERE DILUTION SYSTEM."

F.) DWG. M-367, SH.1 (REV. 55), SH.2 (REV. 53), SH.3 (REV. 54), "CONTAINMENT ATMOSPHERIC CONTROL SYSTEM."

EVALUATE THE EFFECT OF FAILED PCV (BASED ON FISHER MODEL 95H REGULATORS WITH 1" ORIFICE PER MOD 1316)

THE EXISTING SGIG PIPING CONFIGURATION HAS ISOLATION VALVES UPSTREAM AND DOWNSTREAM OF THE PCV'S (SEE REFER. E & F)

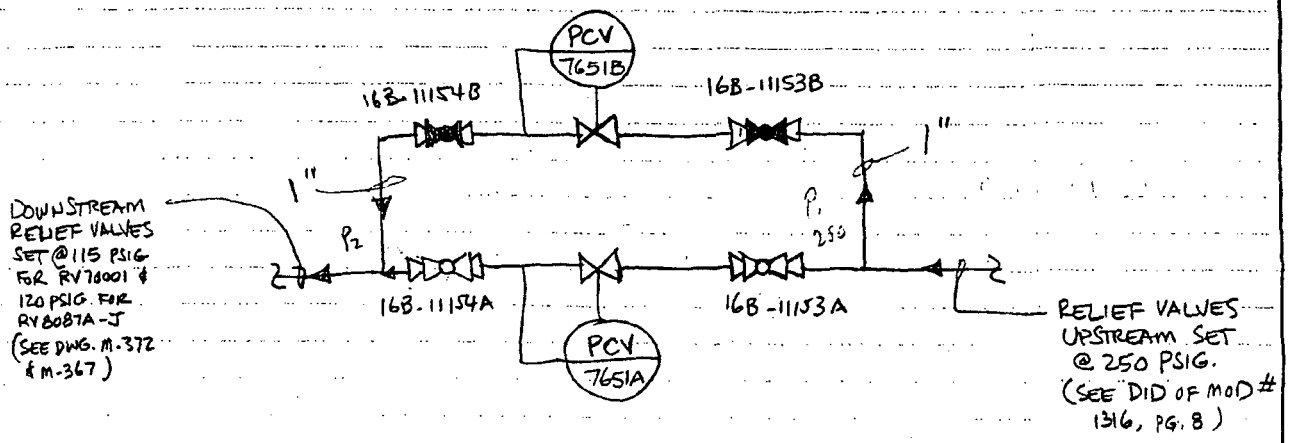

FLOW SKETCH OF PCV PORTION
(DWG. M-372, SH. 1)

FLOW THROUGH FAILED-OPEN PCV

SUBSTITUTING 1" ORIFICE OF FAILED PCV ON PAGES 22 & 23 OF CALC. PM-375, THE TABLE VALUE FOR GIVEN CONDITIONS (SEE REFER. 13 OF CALC.)

FLOW = 2,338 SCFM (SEE REFER. 13 OF CALC. PM-375, @ 150 PSIG INLET PRESS & 1" ORIFICE)

THE ISOLATION VALVES (16B-11153A,B & 16B-11154A,B) ARE BELLOWS VALVES NUPRO MODEL SS-8UW-TW, 3/4 SS BODY. (SEE REFER. A & B)

FLOW THROUGH ISOLATION VALVES (BOTH UPSTREAM OR DOWNSTREAM OF PCV)* USING VENDOR'S TECH. DATA FOR NUPRO VALVES

USING THE PROCEDURE FOR CALCULATING GAS FLOW (SEE PAGE ~~15~~ 18, REFER. D)

N_2 AT −20°F FLOWING THROUGH THE VALVE (Refer to DID for MOD1316 FOR N_2 TEMP., PG. 10, USE −20°F FOR CONSERVATISM)

$C_V = 1.2$ FOR NUPRO VALVE SERIES "8U" (SEE PG. 10, REFER. C)

P_1 = UPSTREAM PRESSURE = 250 PSIG. = 264.7 psia

P_2 = OUTLET PRESSURE = 120 PSIG ← use 120 psig because this is the higher relief valve (RV-8087A-J) setting compared to 115 psia relief valve (RV-70001)

134.7 psia

THE UPSTREAM AND DOWNSTREAM ISOLATION VALVES ARE IDENTICAL (REFER. B & E) AND AS SUCH THESE VALVES (IN SERIES) WILL HAVE IDENTICAL FLOW RATES.

FROM FORMULA (4) ON PAGE 15 (SEE REFER. D) CALCULATE THE FLOW RATE (Q) AS FOLLOWS:

$$Q = 16.05\, C_V \sqrt{\frac{(P_1^2 - P_2^2)}{(SG) \times T}}$$

where, SG for N_2 = 0.967 (from Refer. D)

$T = (-20°F + 460) = 440°R$

ASSIGNING (P_x) AS THE PRESSURE BETWEEN THE UPSTREAM AND DOWNSTREAM VALVES, FLOW CAN BE CALCULATED AS FOLLOWS,

$$Q_{(\text{UPSTREAM VALVE})} = 16.05\, C_V \sqrt{\frac{(P_1^2 - P_x^2)}{(SG) \times T}}$$

* SINCE FAIL-OPENED PCV HAS BEEN POSTULATED FOR THIS EVALUATION, THERE WILL BE A LOSS OF PRESSURE CONTROL OF THE SYSTEM, THEREFORE THE UPSTREAM AND DOWNSTREAM ISOLATION VALVES (IN SERIES) ARE SUBJECT TO THE PRESSURE CONDITIONS (P_1 & P_2).

$$Q_{(\text{DOWNSTREAM VALVE})} = 16.05\, C_V \sqrt{\frac{(P_x^2 - P_2^2)}{(SG) \times T}}$$

$$Q_{(\text{UPSTREAM VALVE})} = Q_{(\text{DOWNSTREAM VALVE})}$$

$$\cancel{16.05}\, \cancel{C_V} \sqrt{\frac{(P_1^2 - P_x^2)}{(SG) \times T}} = \cancel{16.05}\, \cancel{C_V} \sqrt{\frac{(P_x^2 - P_2^2)}{(SG) \times T}}$$

SIMPLIFYING,

$$(P_1^2 - P_x^2) = (P_x^2 - P_2^2)$$

SUBSTITUTING P_1 & P_2,

$$\overline{264.7}^2 - P_x^2 = P_x^2 - \overline{134.7}^2$$

$$2P_x^2 = \overline{264.7}^2 + \overline{134.7}^2$$

$$P_x^2 = \frac{\overline{264.7}^2 + \overline{134.7}^2}{2}$$

$$P_x = \sqrt{\frac{\overline{264.7}^2 + \overline{134.7}^2}{2}} = \underline{\underline{210 \text{ psia}}}$$

CALCULATING FOR Q,

$$Q_{\text{UPST.}} = (16.05)(1.2)\sqrt{\frac{(\overline{264.7}^2 - \overline{210}^2)}{(.967)(440)}}$$

$$= 150.46 \text{ SCFM}$$

$$Q_{\text{DNST.}} = (16.05)(1.2)\sqrt{\frac{(\overline{210}^2) - (\overline{134.7}^2)}{(.967)(440)}}$$

$$= 150.43 \text{ SCFM}$$

$\therefore$ $Q \approx 150.4$ SCFM SAY $\underline{\underline{150 \text{ SCFM}}}$

FLOW THROUGH THE ISOLATING VALVES @ 150 SCFM IS LESS THAN THE FLOW THROUGH A FAILED PCV @ 2338 SCFM. BECAUSE CALC. PM-375 DID NOT CONSIDER THE UPSTREAM RESISTANCE OF THE BLOCK VALVE THEREFORE THE LIMITING COMPONENTS IN THE EVENT OF A FAIL-OPENED PCV ARE THE ISOLATION VALVES (IN SERIES).

FROM PG. 23 OF CALC. PM-375, THE MINIMUM FLOW THROUGH THE PCV PORTION OF THE SYSTEM UNDER A FAILED PCV CONDITION HAS BEEN CALCULATED TO BE 150 SCFM FOR 4-HR. DURATION. THE CALCULATED DATA IS BASED ON A 1/4" ORIFICE THROUGH THE FAILED PCV, RATHER THAN THE 1" ORIFICE OF THE CURRENT DESIGN.

CONCLUSION:

THE USE OF FISHER REGULATOR MODEL 95H WITH 1" ORIFICE PER MOD 1316 DOES NOT IMPACT THE REQUIRED NITROGEN INVENTORY TO SUSTAIN A FAILED PCV AND RESULTING LOSS OF NITROGEN FOR A 4-HR PERIOD.

THE FLOW THROUGH THE PCV PORTION OF THE SYSTEM UNDER A FAILED PCV CONDITION REMAINS UNCHANGED AT 150 SCFM ALTHOUGH THE LIMITING COMPONENTS ARE THE ISOLATION VALVES (IN SERIES) RATHER THAN THE FAILED PCV ORIFICE AS ORIGINALLY CALCULATED.

COINCIDENTALLY, THE CALCULATED RESULTS ON PAGES 22 & 23 OF CALC. PM-375 ARE NOT AFFECTED BY THE USE OF FISHER REGULATOR MODEL 95H WITH 1" ORIFICE.

REFERENCE C. ATTACHMENT I PAGE 8

N-390-3
April, 1990

"U" SERIES BELLOWS SEALED VALVES

16B-11154
16B-23339

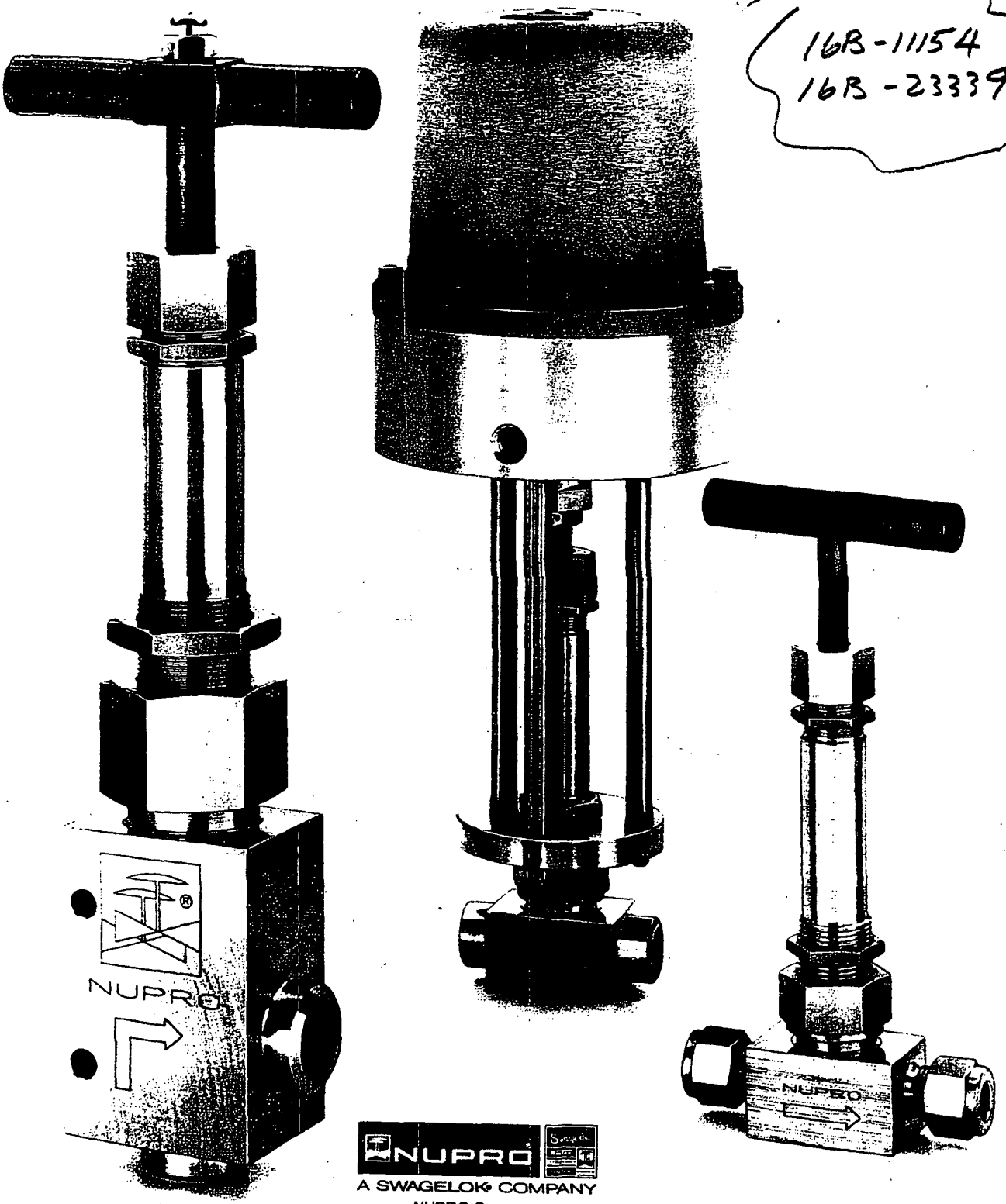

NUPRO
A SWAGELOK COMPANY

NUPRO Company
4800 E. 345th Street
Willoughby, Ohio 44094

© 1990 Swagelok Co., all rights reserved

FEATURES/BENEFITS

The NUPRO® "U" Series Bellows Valve provides safety, reliability and versatility in the most difficult applications. The "U" Series secondary containment system prevents leakage to atmosphere in the event of a bellows failure.

- Pressures to 2500 PSI (17,200 kPa)
- Temperatures to 1200°F (649°C)
- 316 stainless steel construction
- Flow coefficients (C_V) from 0.36 to 5.3
- SWAGELOK® Tube Fitting ends: 1/4" to 1/2" and 6mm to 12mm
- Tube socket weld ends: 1/4" to 3/4"
- Tube butt weld ends: 3/8" to 1"
- Tube extensions: 1/4" to 1" O.D. x 3" long
- CAJON® Male VCR® Metal Gasket Face Seal Fitting ends: 1/4" and 1/2"
- CAJON® Male VCO® O-Ring Face Seal Fitting ends: 1/4" and 1/2"
- Choice of Stellite or Kel-F stem insert materials
- Regulating style insert available for "4U" Series.
- Air actuators available
- Bonnet tube extensions available
- 100% helium leak tested

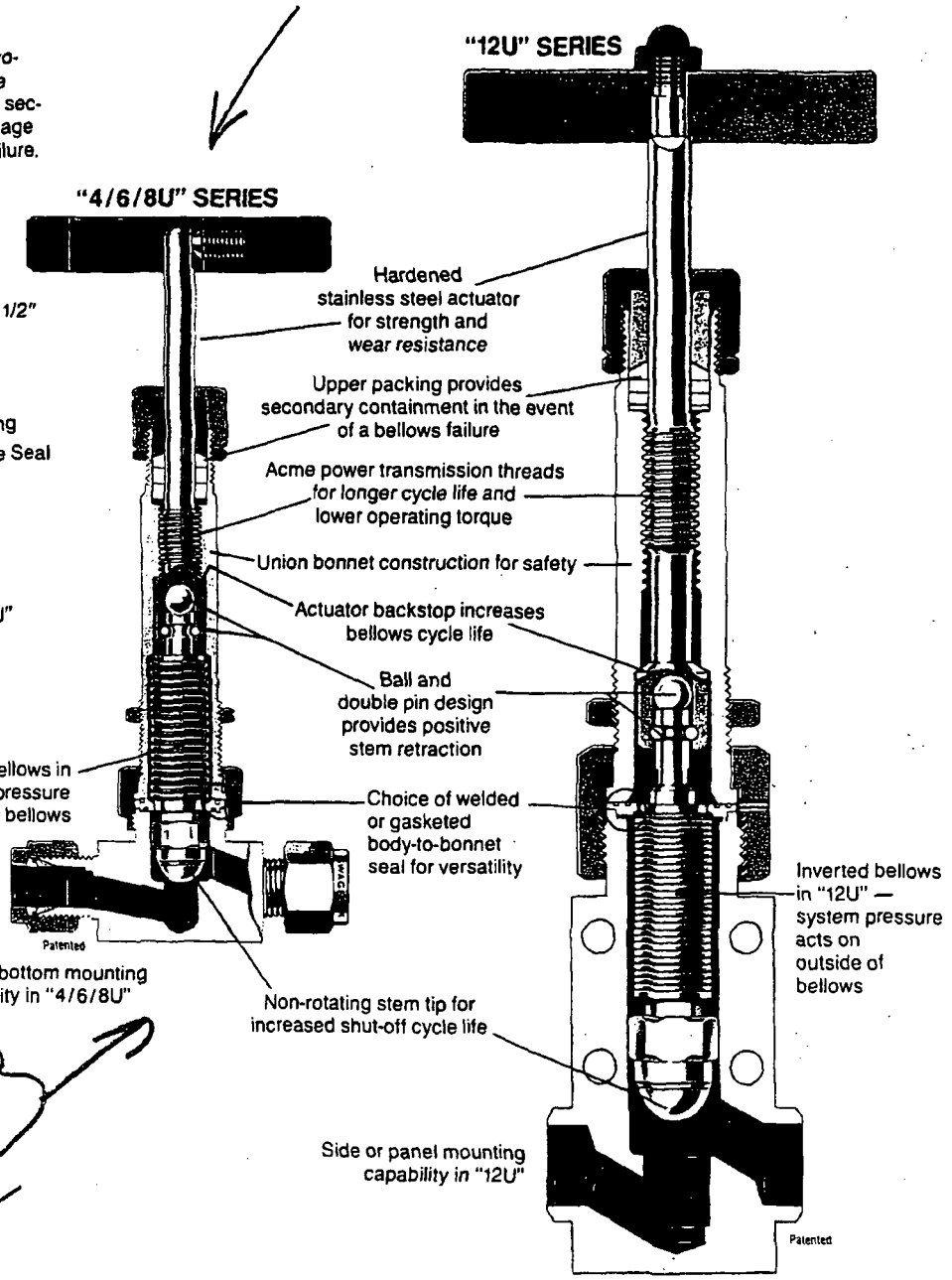

16B-11154
16B-23339

MODEL FEATURES

"UW" Series

All-welded, hermetically sealed for temperatures to 1200°F (649°C)

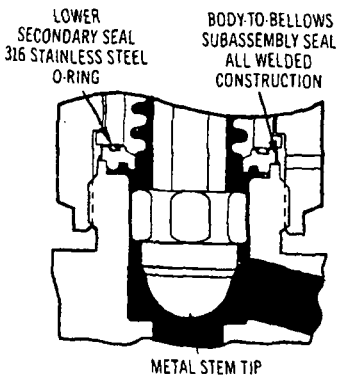

- Stellite stem insert and Grafoil secondary packing
- Welded body-to-bonnet seal for absolute containment of system fluid

"UG" Series

Metal-to-metal shut-off for temperatures to 650°F (343°C)

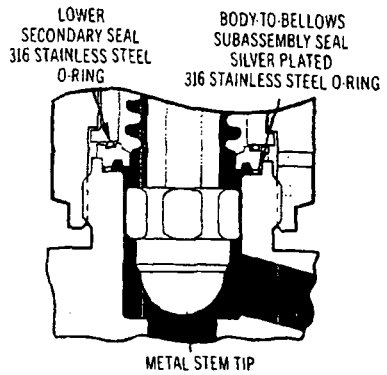

- Stellite stem insert and Grafoil secondary packing
- Gasketed body-to-bonnet seal for easy field maintenance
- Replaceable bellows and insert/adapter subassemblies

"UK" Series

Leak-tight shut-off in vacuum, cryogenic, or pressurized systems to 200°F (93°C)

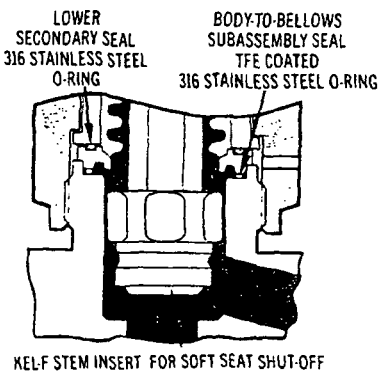

- Kel-F stem insert and TFE secondary packing
- Gasketed body-to-bonnet metal seal for easy field maintenance
- Replaceable bellows and insert/adapter subassemblies

VALVE SERIES

KEFER. C
ATTACHMENT I.

PAGE 10

TECHNICAL DATA

FLOW COEFFICIENT (Cv)

4U	0.36	2500 PSI (17,200 kPa)	"UK" 200°F (93°C) "UG" 650°F (343°C) "UW" 1200°F (649°C)	0.11 in.³ (1.8 cm³)
6U-MM				
6U	1.00			0.25 in.³ (4.0 cm³)
10U-MM				
8U	1.2			0.27 in.³ (4.4 cm³)
12U-MM				
12U	3.1			1.46 in.³ (23.9 cm³)
12UA*	5.3			1.22 in.³ (20.0 cm³)

* "A" designates angle pattern valve.

TEMPERATURE GRADIENT

600°F (315°C)	135°F (57°C)
900°F (482°C)	140°F (60°C)
1200°F (649°C)	150°F (66°C)

WORKING PRESSURE IN PSIG

		TEMPERATURE @ PRESSURE (PSIG)*		
– 20°F (– 28°C) to	100°F (38°C)	2500	2500	2500
	200°F (93°C)	2500	2500	2500
	300°F (149°C)	2500	2500	
	400°F (204°C)	2500	2500	
	500°F (260°C)	2500	2500	
	600°F (315°C)	2500	2500	
	650°F (343°C)	2500	2500	
	700°F (371°C)	2120		
	750°F (399°C)	1740		
	800°F (427°C)	1360		
	850°F (454°C)	980		
	900°F (482°C)	600		
	950°F (510°C)	540		
	1000°F (538°C)	480		
	1050°F (565°C)	425		
	1100°F (593°C)	360		
	1150°F (621°C)	300		
	1200°F (649°C)	250		
	1500°F (815°C)	50		

*To determine kPa, multiply PSIG by 6.89. To determine Bar, multiply PSIG by .0689. For complete information on ANSI Class ratings, refer to *Technical Bulletin No. 4.*

FLOW COEFFICIENT vs. TURNS OPEN

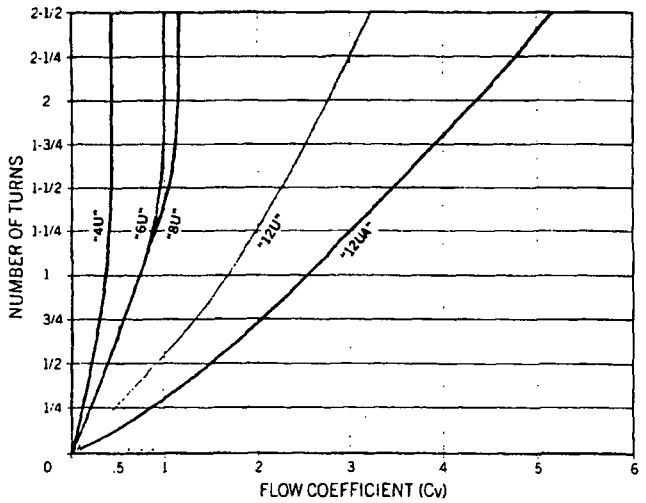

FLOW CURVES

Air

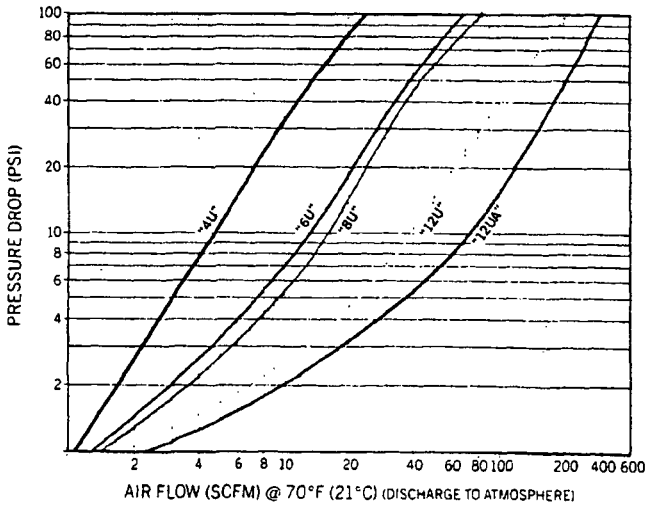

Water

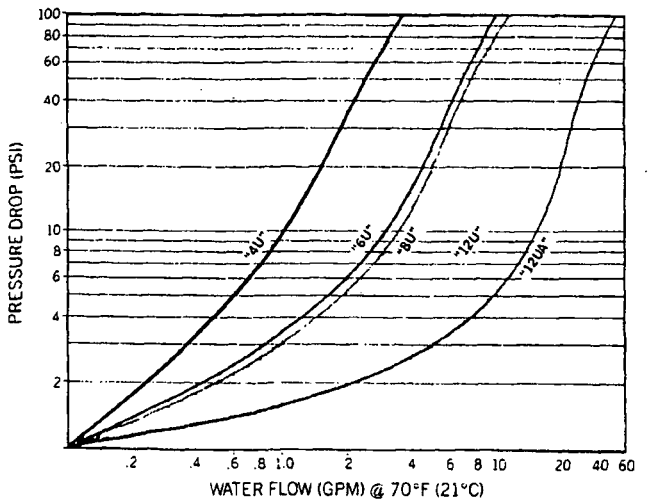

MATERIALS OF CONSTRUCTION

1A	Set Screw		Alloy Steel/ANSI 18.3	—
1B	Cap Nut		—	18-8SS/Commercial
2	Handle		Aluminum/B211[1]	Aluminum/B211[2]
3	Gland Nut		316SS/A276[3]	
4	Gland		316SS/A276	
5	Packing (3)	UK	TFE/MIL-P-19468A[4]	
		UG/UW	Grafoil/Commercial[5]	
6	Spacer		316SS/A276	
7	Jam Nut		316SS/A276[3]	
8	Panel Mounting Nut		316SS/A276	
9	Bonnet Nut		316SS/A276[8]	
10	Bonnet		316SS/A276[8]	
11	Lower Seal O-Ring		316SS/A580[4]	
12	Actuator		440CSS/A276[4,7]	
13	Pin (2)		416SS/Commercial	
14	Ball Bearing		440CSS/Commercial	
15	Stem Extension		440CSS/A276	—
16	Stem		316SS/A276	
17	Bellows		347SS/A269[3]	316SS/A240
18	Weld Ring		316SS/A276	
19	Adapter		316SS/A276	
20A	Insert	UG/UW	Stellite #6/Commercial	
20B	Insert	UK	Kel-F 6060/AMS-3650A	
21	O-Ring	UK	316SS/A580[8]	
		UG	316SS/A580[8]	
22	Body		316SS/A276	

Wetted parts numbered in red.

LUBRICANTS

[1] Green anodized
[2] Green paint
[3] Molybdenum disulfide dry film
[4] Silicone base lube
[5] Molybdenum disulfide base paste
[6] Silver plated
[7] Molybdenum disulfide base dry film and paste
[8] TFE coated

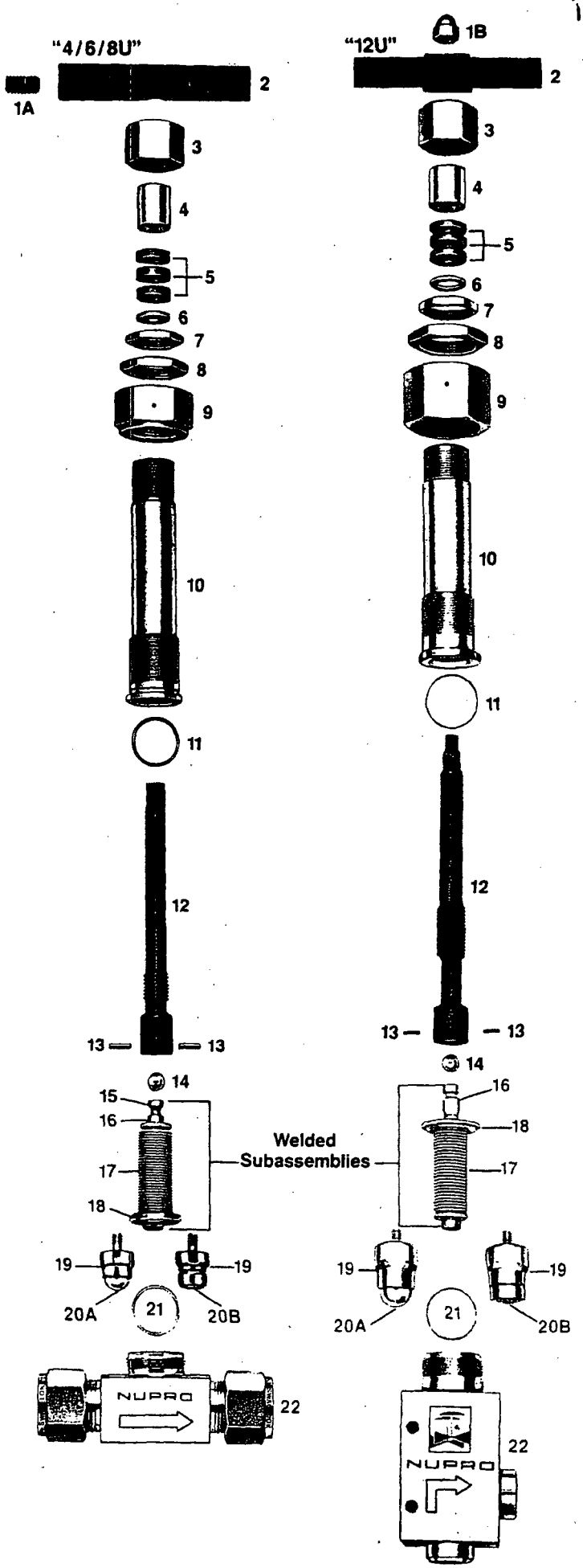

DIMENSIONS

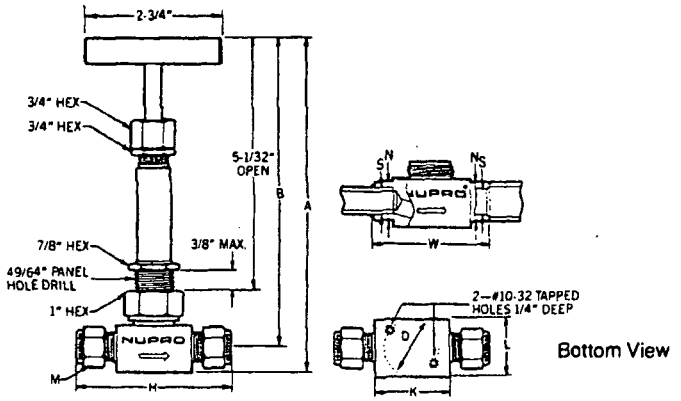

"4/6/8U" SERIES

SS-4UW	0.172	4.4	1/4 SWAGELOK	6½	5 15/16	1	2½	1	1	9/16	—	—	—
SS-4UW-TW	0.172	4.4	1/4 TSW 3/8 MTW	6½	5 15/16	1	—	1	1	—	⅜	¼	1 7/16
SS-6UW	0.281 (port)	7.1 (port)	3/8 SWAGELOK	6⅝	6⅛	1⅛	3⅛	1½	1⅛	11/16	—	—	—
SS-6UW-TW	0.281 (port)	7.1 (port)	3/8 TSW 1/2 MTW	6⅝	6⅛	1⅛	—	1½	1⅛	—	½	⅜	2¼
SS-8UW	0.312	7.9	1/2 SWAGELOK	6⅝	6⅛	1⅛	3 5/16	1½	1⅛	⅞	—	—	—
SS-8UW-TW	0.312	7.9	1/2 TSW 3/4 MTW	6⅝	6⅛	1⅛	—	1½	1⅛	—	¾	½	2¼
SS-6UW-MM	0.172	4.4	6mm SWAGELOK	6½	5 15/16	1	2½	1	1	9/16	—	—	—
SS-10UW-MM	0.281 (port)	7.1 (port)	10mm SWAGELOK	6⅝	6⅛	1⅛	3⅛	1½	1⅛	¾	—	—	—
SS-12UW-MM	0.312	7.9	12mm SWAGELOK	6⅝	6⅛	1⅛	3 5/16	1½	1⅛	⅞	—	—	—

All dimensions are in inches (except where *mm* is indicated) — for reference only, subject to change.
* Dimensions shown with SWAGELOK nuts finger-tight.

"12U" SERIES

SS-12UW-TW	0.500	12.7	3/4" TSW, 3/4" PBW
SS-12UAW-TW	0.625	15.9	1" TBW

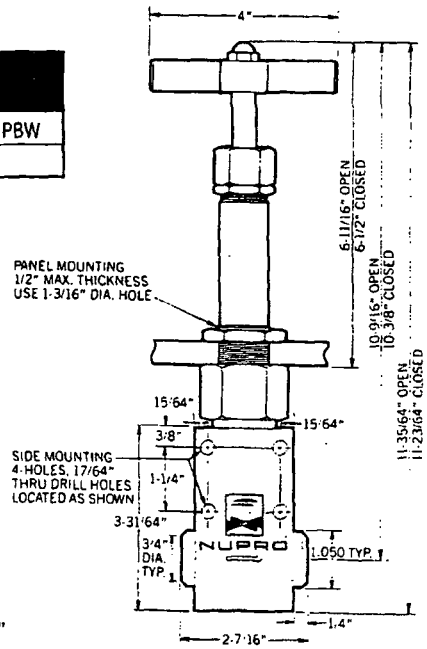

"12U"

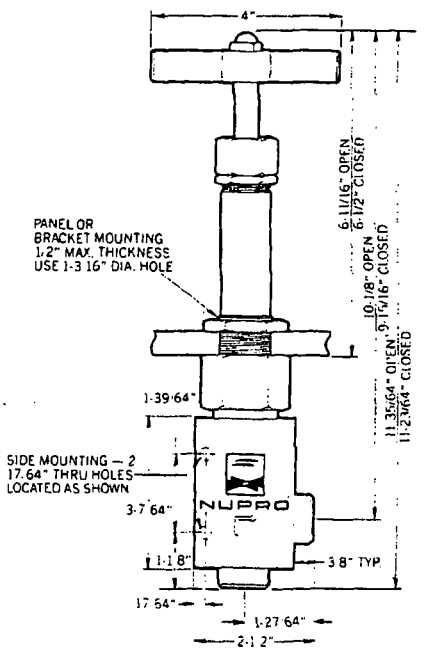

"12UA"

ORDERING INFORMATION

All Ordering Numbers shown above specify a "UW" Series valve. To order a "UK" or "UG" Series valve, replace the UW in the valve Ordering Number with **UK** or **UG**. Examples: SS-4**UK** SS-12**UG**-TW

TESTING

All "U" Series Bellows Sealed Valves are helium leak tested to a rate of 4 x 10^{-9} standard c.c./sec. at the seat, envelope and all seals.

CLEANING & PACKAGING

All valves with VCR and VCO ends	Special Cleaning and Packaging to NUPRO Specification NC-11.
All other valves	Standard Cleaning and Packaging to NUPRO Specification NC-10. Optional Special Cleaning and Packaging to NUPRO Specification NC-11.

REFER. C
ATTACHMENT I-

PAGE 13
16 OF 18
8/4

VALVE OPTIONS

Bonnet Port Tubes

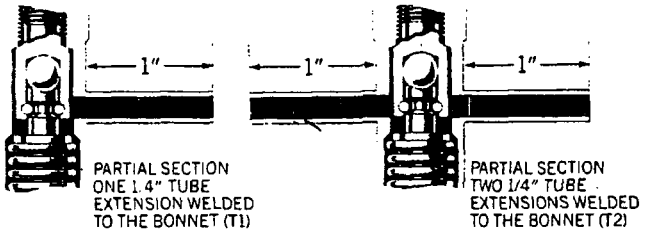

Monitor bellows integrity • Vacuum insulate bonnet area • Provide heating or cooling jacket • Pressurize bonnet area to increase effective pressure rating (see note below)

- Available with either one or two bonnet port tubes
- 316 stainless steel tube port tube is 1/4" O.D. x 1" long
- "4/6/8U" tubes are welded to bonnet; "12U" tubes are threaded to bonnet

*To order a valve with bonnet port tubes, use **T1** for one tube, or **T2** for two tubes, as a suffix to the valve Ordering Number.*
*Examples: SS-4UG-**T1** SS-12UG-TWT**2***

NOTE: When pressurizing above the bellows through the bonnet port(s), be sure the system or bellows internal pressure is greater than the external bellows pressure before operating the valve. The maximum pressure rating above the bellows is 1000 PSI (6800 kPa). You may increase the bellows internal or system pressure by 60% of the pressure supplied above the bellows. This proportional factor is necessary because of force distribution and areas within the valve.

High Temperature Model

On "UW" Series valves only — for temperature applications above 900°F (482°C)

- Special high-temperature lubricant prevents seizing of actuator threads
- Extends temperature rating to 1500°F at 50 PSI (816°C at 340 kPa) with self-lubricating fluids such as liquid metal

*To order a high temperature model "UW" Series valve, insert **HT** into the valve Ordering Number.*
*Examples: SS-8UW**HT**40 SS-12UW-TW**HT***

TFE Secondary Packing Material

On "UG" and "UW" Series valves only — for temperatures from cryogenic to 400°F (204°C)

Replaces the Grafoil secondary packing

*To order a "UG" or "UW" Series valve with TFE secondary packing, insert **-TF** after the valve series designator in the valve Ordering Number.*
*Examples: SS-4UG-**TF** SS-8UW-**TF**4C*

SAFE VALVE SELECTION
When selecting a valve, the total system design must be considered to ensure safe, trouble-free performance. Valve function, material compatibility, adequate ratings, proper installation, operation, and maintenance are the responsibility of the system designer and user.

CREDITS
Kel-F — TM 3M Company
17-7PH — TM Armco
Stellite — TM Cabot Corp.
SWAGELOK — TM Crawford Fitting Company
CAJON, VCR, VCO — TM Cajon Company
Grafoil — TM Union Carbide

Your Local Authorized Sales & Service Representative:

SWAGELOK companies

Welded Tube Extensions

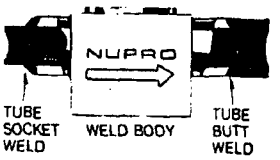

- Factory welded to -TW style ended valves
- Socket welded or butt welded
- 3 inches long (optional lengths up to 12 inches)
- 316 stainless steel

To order a valve with welded tube extensions, replace -TW in the valve Ordering Number with the desired designator listed below.
*Examples: SS-4UK-**TH3** SS-6UG-**TP3***

1/4" O.D. x .049" wall	-4U-TW	-TH3	—
3/8" O.D. x .065" wall	-4U-TW	—	-TN3
	-6U-TW	-TN3	—
1/2" O.D. x .065" wall	-6U-TW	—	-TP3
	-8U-TW	-TP3	—
3/4" O.D. x .083" wall	-8U-TW	—	-TV3
	-12U-TW	-TV3	—
1" O.D. x .065" wall	-12U-TW	—	-TR3

Welded CAJON® VCR® and VCO® Face Seal Fittings

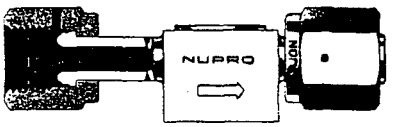

- Factory welded to -TW style ended valves
- Socket welded or butt welded
- VCR or VCO gland, and female nut
- 316 stainless steel

To order a valve with VCR or VCO Fittings, replace the -TW in the valve Ordering Number with the desired designator listed below.
*Examples: SS-4UK-**V51** SS-8UG-**V19***

1/4" Female CAJON VCR	-4U-TW	-V13	-V51*
1/2" Female CAJON VCR	-6U-TW	-V16	-V19
	-8U-TW	-V19	-V47*
1/4" Female CAJON VCO	-4U-TW	-V52	-V71
1/2" Female CAJON VCO	-6U-TW	-V58	-V72
	-8U-TW	-V53	-V73

* Uses modified body and gland for shortest inlet-to-outlet dimension.

Regulating Style Insert

On "4UG" and "4UW" Series only — for greater flow control with 10° tapered stem insert

316 stainless steel material

*To order a valve with a regulating style insert, insert an **R** into the valve Ordering Number.*
*Examples: SS-4U**RG** SS-4UR**W**-TW*

Alloy 600 Bellows Material

On "4/6/8U" Series only — for certain corrosive applications such as boiling water, heavy water, and pressurized water reactor systems

Replaces the standard 347 stainless steel bellows

*To order a valve with an alloy 600 bellows, insert **IN** in the valve Ordering Number. Examples: SS-8UG-TW**IN** SS-4UW-**IN**4C*

Printed in U.S.A.
5-90-125M-SP
MS-01-38

TEL-CON NOTE

JO NO. 03040.242

TIME: 3:10 P.M. DATE: SEPT. 16, 1992

	NAME	COMPANY
FROM:	R. CORPUS	SWEC
TO:	BILL LUTZ	PENN VALVE & FITTING (NUPRO VALVE LOCAL REP.) (215) 657-2900

TOPIC: NUPRO VALVE "U" SERIES

DISCUSSION:	ACTION REQUESTED
REQUESTED INFORMATION REGARDING AIR FLOWS AT HIGHER PRESSURE DROPS (>100 PSI) FOR SUBJECT VALVES.	
B. LUTZ REPLIED THAT THE INFORMATION CAN BE OBTAINED FROM CATALOG TECH. DATA SECTION, WHICH IS AT THE BACK OF THE SWAGELOK CATALOG. SEE SECTION ON LIQUID FLOW CALCULATIONS & GAS FLOW CALCULATIONS. USE FORMULAS AS APPLICABLE.	
RC 9-16-92	

ATTACHMENT

PAGE 15
18 OF 18

GAS FLOW CALCULATIONS

REFER TO ATTACHMENT I -

AIR CURVE

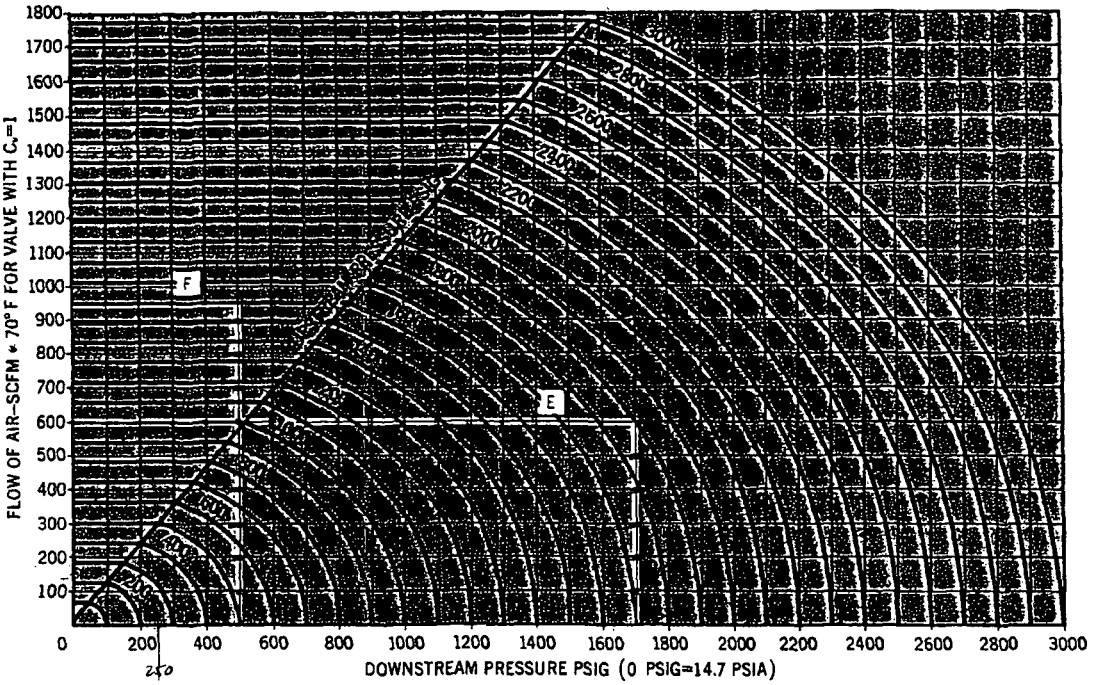

FLOW FORMULAS FOR GASES

Recommended by the Fluid Controls Institute, Inc.

(4)
$$Q = 16.05\, C_v \sqrt{\frac{(P_1^2 - P_2^2)}{(SG) \times T}}$$

(5*)
$$Q = 13.61 \times P_1 \times C_v \sqrt{\frac{1}{(SG) \times T}}$$

Where: Q = Flow in SCFM
C_v = Valve flow coefficient
SG = Specific gravity of gas (Air @ 14.7 PSIA and 70°F = 1.0)
‡T = Absolute temperature of flowing gas (°F + 460)
$\Delta P = (P_1 - P_2)$ Pressure drop (PSI)
P_1 = Inlet pressure (PSIA)
P_2 = Outlet pressure (PSIA)

‡Refer to "USEFUL CONVERSION DATA" on reverse side of "Technical Information" tab for converting °C to °F.

*When outlet pressure is approximately one half or less of the inlet pressure ($P_2 = .53P_1$) this condition becomes known as a critical pressure and then formula (5) must be used. Formula (5) is exactly the same as formula (4) except that $.53 \times P_1$ is substituted for P_2.

SPECIFIC GRAVITY TABLE FOR GASES

GAS	Specific gravity relative to air @ 70° F
Acetylene	.907
Air	1.000
Ammonia	.587
Argon	1.38
Butane	2.07
Carbon Dioxide	1.529
Helium	.137
Hydrogen	.0695
Methane	.554
Nitrogen	.967
Oxygen	1.105
Propane	1.562
Sulfur Dioxide	2.264

Flow calculations and charts for gases differ from those for liquids due primarily to the compressibility of gases. The above chart shows the flow rates in standard cubic feet per minute (SCFM) of 70°F air flowing through a valve having a $C_v = 1$. From this chart, sizing of a valve can be readily accomplished. Corrections for gases having specific gravities other than air and flowing at temperatures other than 70°F can be made by using formulas (4) or (5).

EXAMPLE E
Find the SCFM of 70°F air that will pass through a valve having a $C_v = 1$ with an inlet pressure of 1900 PSIG and a downstream pressure of 1700 PSIG. Q? Locate the downstream pressure of 1700 PSIG on the chart and proceed vertically to the 1900 PSIG upstream pressure line. Then proceed horizontally to the left and read the flow rate equals 600 SCFM. Q Under the same conditions, what SCFM would pass through a valve with a $C_v = .72$? Q Since the chart is drawn for a valve having a $C_v = 1$, simply multiply the 600 SCFM by .72 which equals 432 SCFM.

EXAMPLE F
Find the SCFM of 70°F air that will pass through a valve having a $C_v = 1$ with an upstream pressure of 1600 PSIG and an outlet pressure of 500 PSIG. Q Locate the downstream pressure of 500 PSIG and proceed vertically past the critical pressure line to the 1600 PSIG upstream pressure line. Then proceed horizontally to the left and read the flow rate equals 950 SCFM.

EXAMPLE G
Butane at 70°F is flowing through a valve with a $C_v = .80$. The upstream pressure is 2000 PSIG and the outlet pressure is 500 PSIG. Find the flow rate. Q First check for critical pressure to determine whether to use formula (4) or (5).
$.53 \times P_1 = .53 \times 2014.7 = 1067.8$ PSIA $\quad P_2 = 514.7$ PSIA (less than $.53P_1$)
The pressure is critical and formula (5) must be used.

$$Q = 13.61 \times P_1 \times C_v \sqrt{\frac{1}{(SG) \times T}} = 13.61 \times 2014.7 \times .80 \sqrt{\frac{1}{(2.07 \times 530)}} = 662 \text{ SCFM of butane}$$

Printed in U.S.A.
6-88-10M-TMS
MS-01-83

(THIS PAGE IS AN EXCERPT FROM SWAGELOK CATALOG, TECHNICAL DATA SECTION)

Calculation PM-0375 Attachment II - Computation of System Leakage (ECR 09-00416)
7 day Leakage Estimate

Fill Cycle	Data Point	Level	psig	Drop per Day	Volume	Delta V	Makeup to DW	Estimated Leakage	7 day rolling total	7day rolling avg		
	8/4/2008	51	180	-	453041	-		-			Total Volume (scf)	81939.4
	8/5/2008	50	185	1	443458	9583.8		9583.8			Days	14
	8/6/2008	49.5	187.5	0.5	439323	4134.3		4134.3			Average Volume/day	5852.816
	8/7/2008	49	187.5	0.5	435218	4105.2		4105.2			Avg 7 day rolling total	41597.0
	8/8/2008	45	187.5	4	398822	36396.4		36396.4			Max 7 day rolling total	62654.3
	8/9/2008	45	187.5	0	398822	0.0	1512.209	-1512.2			Max 1 Day Drop (in)	4
	8/10/2008	44	187.5	1	388875	9946.9		9946.9			Avg 1 Day Drop (in)	0.642857
1	8/11/2008	44	187.5	0	388875	0.0		0.0	62654.3	8950.6		
	8/12/2008	43.5	190	0.5	383750	5125.0		5125.0	58195.5	8313.6		
	8/13/2008	43	190	0.5	378600	5150.0		5150.0	59211.2	8458.7		
	8/14/2008	43	195	0	378475	125.0	756.700	-631.7	54474.3	7782.0		
	8/15/2008	42	195	1	368006	10468.8		10468.8	28546.7	4078.1		
	8/16/2008	42	200	0	367888	118.8		118.8	30177.7	4311.1		
	8/17/2008	42	200	0	367888	0.0		0.0	20230.8	2890.1		
	8/18/2008	42	200	0	367888	0.0	945.636	-945.6	19285.2	2755.0		
	8/19/2008	51	180	-9	453041	-		-			Total Volume (scf)	87500.5
	8/20/2008	51	180	0	453041	0.0	568.655	-568.7			Days	14
	8/21/2008	50.5	180	0.5	448836	4205.3	568.800	3636.5			Average Volume/day	6250.034
	8/22/2008	50	185	0.5	443458	5378.4		5378.4			Avg 7 day rolling total	57033.5
	8/23/2008	49.5	190	0.5	439198	4259.5		4259.5			Max 7 day rolling total	65332.5
	8/24/2008	49	190	0.5	435092	4105.9		4105.9			Max 1 Day Drop (in)	4
	8/25/2008	49	190	0	435092	0.0		0.0			Avg 1 Day Drop (in)	0.678571
2	8/26/2008	45	190	4	398725	36367.3		36367.3	53179.0	7597.0		
	8/27/2008	44	190	1	388800	9925.0		9925.0	63672.7	9096.1		
	8/28/2008	43.5	195	0.5	383613	5187.5		5187.5	65223.6	9317.7		
	8/29/2008	43.5	200	0	383475	137.5		137.5	59982.7	8569.0		
	8/30/2008	43	200	0.5	378350	5125.0	1043.595	4081.4	59804.6	8543.5		
	8/31/2008	43	200	0	378350	0.0	947.436	-947.4	54751.2	7821.6		
	9/1/2008	42	205	1	367769	10581.3		10581.3	65332.5	9333.2		
	9/2/2008	41.5	205	0.5	362413	5356.3		5356.3	34321.5	4903.1		
	9/3/2008	52	175	-10.5	461674	-		-			Total Volume (scf)	90283.1
	9/4/2008	52	175	0	461674	0.0		0.0			Days	16
	9/5/2008	51	180	1	453041	8632.1		8632.1			Average Volume/day	5642.692
	9/6/2008	51.5	180	-0.5	457187	-4146.0		-4146.0			Avg 7 day rolling total	51995.0
	9/7/2008	51	180	0.5	453041	4146.0		4146.0			Max 7 day rolling total	69070.4
	9/8/2008	50.5	180	0.5	448836	4205.3	2462.316	1743.0			Max 1 Day Drop (in)	4
	9/9/2008	50	180	0.5	443705	5131.0		5131.0			Avg 1 Day Drop (in)	0.625
	9/10/2008	48	180	2	427012	16693.2		16693.2	32199.3	4599.9		
3	9/11/2008	48	180	0	427012	0.0	1040.698	-1040.7	31158.6	4451.2		
	9/12/2008	44	180	4	389100	37911.9		37911.9	60438.5	8634.1		
	9/13/2008	44	180	0	389100	0.0		0.0	64584.4	9226.3		
	9/14/2008	43.5	185	0.5	383888	5212.5		5212.5	65651.0	9378.7		
	9/15/2008	43	185	0.5	378725	5162.5		5162.5	69070.4	9867.2		
	9/16/2008	43	185	0	378725	0.0		0.0	63939.4	9134.2		
	9/17/2008	42.5	190	0.5	373400	5325.0		5325.0	52571.2	7510.2		
	9/18/2008	42	200	0.5	367888	5512.5		5512.5	59124.4	8446.3		
	9/19/2008	42	200	0	367888	0.0		0.0	21212.5	3030.4		
	9/20/2008	50	190	-8	443210	-		-			Total Volume (scf)	74235.1
	9/21/2008	50	190	0	443210	0.0		0.0			Days	12
	9/22/2008	50	190	0	443210	0.0	1325.102	-1325.1			Average Volume/day	6186.262
	9/23/2008	49	190	1	435092	8118.0		8118.0			Avg 7 day rolling total	53720.3
	9/24/2008	48.5	190	0.5	430818	4274.8		4274.8			Max 7 day rolling total	64860.3
	9/25/2008	45	195	3.5	398531	32286.3		32286.3			Max 1 Day Drop (in)	3.5
4	9/26/2008	44.5	195	0.5	393656	4875.0		4875.0			Avg 1 Day Drop (in)	0.666667
	9/27/2008	44	200	0.5	388500	5156.3		5156.3	53385.1	7626.4		
	9/28/2008	43.5	200	0.5	383475	5025.0		5025.0	58410.1	8344.3		
	9/29/2008	43	200	0.5	378350	5125.0		5125.0	64860.3	9265.8		
	9/30/2008	43	205	0	378225	125.0		125.0	56867.3	8123.9		
	10/1/2008	42.5	210	0.5	372900	5325.0		5325.0	57917.5	8273.9		
	10/2/2008	42	210	0.5	367650	5250.0		5250.0	30881.3	4411.6		
	10/3/2008	49.5	180	-7.5	439699	-		-			Total Volume (scf)	78064.2
	10/4/2008	49.5	180	0	439699	0.0	474.018	-474.0			Days	10
	10/5/2008	49	180	0.5	435596	4103.0		4103.0			Average Volume/day	7806.425
	10/6/2008	48.5	180	0.5	431309	4287.4	663.457	3623.9			Avg 7 day rolling total	67857.9
	10/7/2008	48	180	0.5	427012	4296.8	758.622	3538.2			Max 7 day rolling total	74435.3
5	10/8/2008	47	180	1	418040	8971.9		8971.9			Max 1 Day Drop (in)	4
	10/9/2008	43	180	4	378850	39190.0		39190.0			Avg 1 Day Drop (in)	0.85
	10/10/2008	42.5	185	0.5	373525	5325.0	568.967	4756.0	63709.0	9101.3		
	10/11/2008	42.5	185	0	373525	0.0	1707.286	-1707.3	62475.8	8925.1		
	10/12/2008	41	185	1.5	357463	16062.5		16062.5	74435.3	10633.6		
	10/13/2008	41	185	0	357463	0.0		0.0	70811.4	10115.9		
	10/14/2008	50	185	-9	443458	-		-			Total Volume (scf)	80949.6
	10/15/2008	50.5	185	-0.5	448506	-5048.3		-5048.3			Days	13
	10/16/2008	50	185	0.5	443458	5048.3		5048.3			Average Volume/day	6226.891
	10/17/2008	49.5	185	0.5	439449	4009.0		4009.0			Avg 7 day rolling total	61112.5
	10/18/2008	49	185	0.5	435344	4104.4		4104.4			Max 7 day rolling total	73595.3
	10/19/2008	49	185	0	435344	0.0	759.201	-759.2			Max 1 Day Drop (in)	5
6	10/20/2008	44	185	5	388950	46394.2		46394.2			Avg 1 Day Drop (in)	0.692308
	10/21/2008	44	190	0	388800	150.0	2223.332	-2073.3	51675.2	7382.2		
	10/22/2008	43	190	1	378600	10200.0	758.932	9441.1	66164.5	9452.1		
	10/23/2008	42	190	1	368125	10475.0	1416.640	9058.4	70174.6	10024.9		
	10/24/2008	41.5	190	0.5	362750	5375.0		5375.0	71540.5	10220.1		
	10/25/2008	41.5	190	0	362750	0.0		0.0	67436.1	9633.7		
	10/26/2008	41	190	0.5	357350	5400.0		5400.0	73595.3	10513.6		

	10/26/2008	41	190	0	357350	0.0		0.0	27201.1	3885.9		
	10/27/2008	52	180	-11	461274	-		-			Total Volume (scf)	93391.5
	10/28/2008	51.5	180	0.5	457187	4086.6		4086.6			Days	13
	10/29/2008	51	180	0.5	453041	4146.0	1701.260	2444.7			Average Volume/day	7183.961
	10/30/2008	49.5	180	1.5	439699	13342.4	3892.135	9450.2			Avg 7 day rolling total	54734.9
	10/31/2008	49.5	185	0	439449	250.5		250.5			Max 7 day rolling total	71703.3
	11/1/2008	49	185	0.5	435344	4104.4		4104.4			Max 1 Day Drop (in)	3
7	11/2/2008	47.5	180	1.5	422618	12726.0	4637.399	8088.6			Avg 1 Day Drop (in)	0.846154
	11/3/2008	47	180	0.5	418040	4578.2		4578.2	33003.2	4714.7		
	11/4/2008	46.5	180	0.5	413363	4677.5		4677.5	33594.1	4799.2		
	11/5/2008	45	185	1.5	398919	14443.8		14443.8	45593.2	6513.3		
	11/6/2008	42	185	3	368244	30675.0	189.199	30485.8	66628.7	9518.4		
	11/7/2008	41.5	182.5	0.5	362919	5325.0		5325.0	71703.3	10243.3		
	11/8/2008	41.5	185	0	362863	56.3		56.3	67655.1	9665.0		
	11/9/2008	41	185	0.5	357463	5400.0		5400.0	64966.5	9280.9		
	11/10/2008	49.5	180	-8.5	439699	-		-			Total Volume (scf)	72791.6
	11/11/2008	48.5	175	1	431554	8144.7	6238.894	1905.8			Days	9
	11/12/2008	48	180	0.5	427012	4542.4	1414.492	3127.9			Average Volume/day	8087.952
	11/13/2008	47.5	180	0.5	422618	4393.7		4393.7			Avg 7 day rolling total	65681.8
8	11/14/2008	47	180	0.5	418040	4578.2		4578.2			Max 7 day rolling total	67757.8
	11/15/2008	47	180	0	418040	0.0		0.0			Max 1 Day Drop (in)	3
	11/16/2008	45	185	2	398919	19121.3		19121.3			Avg 1 Day Drop (in)	0.944444
	11/17/2008	42	185	3	368244	30675.0		30675.0	63802.0	9114.6		
	11/18/2008	41.5	185	0.5	362863	5381.3	1791.640	3589.6	65485.7	9355.1		
	11/19/2008	41	185	0.5	357463	5400.0		5400.0	67757.8	9679.7		
	11/20/2008	51	180	-10	453041	-		-			Total Volume (scf)	86791.3
	11/21/2008	51	180	0	453041	0.0		0.0			Days	14
	11/22/2008	51	180	0	453041	0.0	1608.147	-1608.1			Average Volume/day	6199.38
	11/23/2008	50	180	1	443705	9336.3	471.842	8864.5			Avg 7 day rolling total	47653.6
	11/24/2008	50	185	0	443458	247.4		247.4			Max 7 day rolling total	70922.1
	11/25/2008	49.5	185	0.5	439449	4009.0		4009.0			Max 1 Day Drop (in)	3.5
	11/26/2008	49	190	0.5	435092	4356.4		4356.4			Avg 1 Day Drop (in)	0.696429
9	11/27/2008	49	190	0	435092	0.0		0.0	15869.2	2267.0		
	11/28/2008	48	190	1	426524	8568.4		8568.4	24437.6	3491.1		
	11/29/2008	47.5	190	0.5	422136	4387.5		4387.5	30433.2	4347.6		
	11/30/2008	44	195	3.5	388650	33486.4		33486.4	55055.1	7865.0		
	12/1/2008	43.5	200	0.5	383475	5175.0	756.030	4419.0	59226.7	8461.0		
	12/2/2008	42.5	200	1	373150	10325.0	3117.521	7207.5	62425.1	8917.9		
	12/3/2008	42	200	0.5	367888	5262.5	471.603	4790.9	62859.6	8979.9		
	12/4/2008	41.25	200	0.75	359825	8062.5		8062.5	70922.1	10131.7		
	12/5/2008	55	180	-13.75	484546	-		-			Total Volume (scf)	106216.8
	12/6/2008	55	180	0	484546	0.0		0.0			Days	17
	12/7/2008	54.5	180	0.5	480816	3730.2		3730.2			Average Volume/day	6248.047
	12/8/2008	53	180	1.5	469269	11547.0	189.175	11357.8			Avg 7 day rolling total	48192.3
	12/9/2008	53	180	0	469269	0.0		0.0			Max 7 day rolling total	74916.8
	12/10/2008	52.5	182.5	0.5	465089	4180.3		4180.3			Max 1 Day Drop (in)	3
	12/11/2008	52	182.5	0.5	461074	4014.5		4014.5			Avg 1 Day Drop (in)	0.764706
	12/12/2008	52	182.5	0	461074	0.0		0.0	23282.8	3326.1		
10	12/13/2008	52	182.5	0	461074	0.0	4628.866	-4628.9	18653.9	2664.8		
	12/14/2008	50.5	177.5	1.5	449001	12073.0		12073.0	26996.7	3856.7		
	12/15/2008	50	180	0.5	443705	5296.1		5296.1	20934.9	2990.7		
	12/16/2008	48	180	2	427012	16693.2	1135.450	15557.7	36492.7	5213.2		
	12/17/2008	45	180	3	399113	27899.4		27899.4	60211.8	8601.7		
	12/18/2008	44	180	1	389100	10012.5	1134.476	8878.0	65075.4	9296.5		
	12/19/2008	44	185	0	388950	150.0		150.0	65225.4	9317.9		
	12/20/2008	43.5	185	0.5	383888	5062.5		5062.5	74916.8	10702.4		
	12/21/2008	43	190	0.5	378600	5287.5		5287.5	68131.3	9733.0		
	12/22/2008	42	190	1	368125	10475.0	3116.356	7358.6	70193.8	10027.7		
	12/23/2008	50.5	180	-8.5	448836	-		-			Total Volume (scf)	80618.7
	12/24/2008	50.5	180	0	448836	0.0	567.438	-567.4			Days	16
	12/25/2008	50	185	0.5	443458	5378.4		5378.4			Average Volume/day	5038.667
	12/26/2008	50	185	0	443458	0.0		0.0			Avg 7 day rolling total	47039.4
	12/27/2008	50	185	0	443458	0.0		0.0			Max 7 day rolling total	65107.7
	12/28/2008	49.5	185	0.5	439449	4009.0		4009.0			Max 1 Day Drop (in)	2.5
	12/29/2008	49	190	0.5	435092	4356.4		4356.4			Avg 1 Day Drop (in)	0.53125
	12/30/2008	48	195	1	426280	8812.4		8812.4	21988.8	3141.3		
11	12/31/2008	46.5	195	1.5	412556	13723.6		13723.6	36279.9	5182.8		
	1/1/2009	44	200	2.5	388500	24056.3		24056.3	54957.7	7851.1		
	1/2/2009	44	200	0	388500	0.0		0.0	54957.7	7851.1		
	1/3/2009	43	200	1	378350	10150.0		10150.0	65107.7	9301.1		
	1/4/2009	43	200	0	378350	0.0		0.0	61098.6	8728.4		
	1/5/2009	43	205	0	378225	125.0		125.0	56867.3	8123.9		
	1/6/2009	42.5	210	0.5	372900	5325.0		5325.0	53379.8	7625.7		
	1/7/2009	42	210	0.5	367650	5250.0		5250.0	44906.3	6415.2		
	1/8/2009	42	210	0	367650	0.0		0.0	20850.0	2978.6		
	1/9/2009	52	185	-10	460874	-		-			Total Volume (scf)	97658.2
	1/10/2009	52	185	0	460874	0.0	472.579	-472.6			Days	14
	1/11/2009	51.5	190	0.5	456437	4437.6		4437.6			Average Volume/day	6975.585
	1/12/2009	51	190	0.5	452337	4099.7		4099.7			Avg 7 day rolling total	45877.8
	1/13/2009	51	190	0	452337	0.0		0.0			Max 7 day rolling total	69061.4
	1/14/2009	50	190	1	443210	9126.9		9126.9			Max 1 Day Drop (in)	2.5
	1/15/2009	49.5	190	0.5	439198	4012.1	3022.260	989.8			Avg 1 Day Drop (in)	0.785714
12	1/16/2009	48	190	1.5	426524	12674.3	2258.842	10415.5	28596.8	4085.3		
	1/17/2009	48	190	0	426524	0.0		0.0	29069.4	4152.8		
	1/18/2009	47.5	190	0.5	422136	4387.5		4387.5	29019.3	4145.6		
	1/19/2009	47	190	0.5	417580	4556.4		4556.4	29476.0	4210.9		
	1/20/2009	45	190	2	398725	18855.0		18855.0	48331.0	6904.4		

	1/21/2009	42.5	195	2.5	373275	25450.0		25450.0	64654.1	9236.3			
	1/22/2009	42	190	0.5	368125	5150.0		5150.0	68814.4	9830.6			
	1/23/2009	41	185	1	357463	10662.5		10662.5	69061.4	9865.9			
	1/24/2009	53	180	-12	469269	-					Total Volume (scf)	75378.2	
	1/25/2009	53	180	0	469269	0.0	2446.106	-2446.1			Days	13	
	1/26/2009	52	180	1	461274	7994.9	1223.540	6771.4			Average Volume/day	5798.321	
	1/27/2009	51.5	180	0.5	457187	4086.6		4086.6			Avg 7 day rolling total	39427.8	
	1/28/2009	51	180	0.5	453041	4146.0		4146.0			Max 7 day rolling total	62820.4	
	1/29/2009	51	180	0	453041	0.0		0.0			Max 1 Day Drop (in)	3.5	
	1/30/2009	50.5	185	0.5	448506	4535.5		4535.5			Avg 1 Day Drop (in)	0.692308	
13	1/31/2009	50	185	0.5	443458	5048.3		5048.3	22141.6	3163.1			
	2/1/2009	50	185	0	443458	0.0		0.0	24587.7	3512.5			
	2/2/2009	49.75	187.5	0.25	441329	2129.0		2129.0	19945.3	2849.3			
	2/3/2009	48	185	1.75	426768	14560.8		14560.8	30419.5	4345.6			
	2/4/2009	44.5	190	3.5	393825	32942.9	1421.114	31521.8	57795.4	8256.5			
	2/5/2009	44	190	0.5	388800	5025.0		5025.0	62820.4	8974.3			
	2/6/2009	44	190	0	388800	0.0		0.0	58284.8	8326.4			
	2/7/2009	54	180	-10	477026	-		-			Total Volume (scf)	101341.7	
	2/8/2009	54	180	0	477026	0.0		0.0			Days	18	
	2/9/2009	54	180	0	477026	0.0	1702.075	-1702.1			Average Volume/day	5630.092	
	2/10/2009	53	180	1	469269	7757.4		7757.4			Avg 7 day rolling total	48203.8	
	2/11/2009	52.5	180	0.5	465301	3967.8		3967.8			Max 7 day rolling total	73183.3	
	2/12/2009	52	180	0.5	461274	4027.2		4027.2			Max 1 Day Drop (in)	4	
	2/13/2009	52	180	0	461274	0.0		0.0			Avg 1 Day Drop (in)	0.666667	
	2/14/2009	52	180	0	461274	0.0		0.0	14050.3	2007.2			
	2/15/2009	51	185	1	452689	8584.7		8584.7	22634.9	3233.6			
14	2/16/2009	50.5	185	0.5	448506	4183.3	1133.153	3050.2	27387.2	3912.5			
	2/17/2009	50	185	0.5	443458	5048.3		5048.3	24678.1	3525.4			
	2/18/2009	46	185	4	408469	34988.9		34988.9	55699.3	7957.0			
	2/19/2009	45.5	185	0.5	403763	4706.3		4706.3	56378.3	8054.0			
	2/20/2009	45.5	185	0	403763	0.0		0.0	56378.3	8054.0			
	2/21/2009	43.5	180	2	384025	19737.5	2932.535	16805.0	73183.3	10454.8			
	2/22/2009	43	185	0.5	378725	5300.0		5300.0	69898.6	9985.5			
	2/23/2009	42.5	185	0.5	373525	5200.0		5200.0	72048.4	10292.6			
	2/24/2009	42	185	0.5	368244	5281.3	1791.893	3489.4	70489.5	10069.9			
	2/25/2009	42	190	0	368125	118.8		118.8	35619.3	5088.5			
	2/26/2009	55	180	-13	484546	-		-			Total Volume (scf)	96672.8	
	2/27/2009	54	180	1	477026	7519.8		7519.8			Days	14	
	2/28/2009	54	175	0	477535	-508.2		-508.2			Average Volume/day	6905.203	
	3/1/2009	53.5	175	0.5	473657	3877.9		3877.9			Avg 7 day rolling total	46750.1	
	3/2/2009	53	175	0.5	469721	3936.1		3936.1			Max 7 day rolling total	69308.0	
	3/3/2009	52.5	175	0.5	465726	3994.4	3590.910	403.5			Max 1 Day Drop (in)	5	
	3/4/2009	51	175	1.5	453394	12332.6		12332.6			Avg 1 Day Drop (in)	0.857143	
15	3/5/2009	51	175	0	453394	0.0		0.0	27561.6	3937.4			
	3/6/2009	50.5	175	0.5	449166	4227.3		4227.3	24269.1	3467.0			
	3/7/2009	50	175	0.5	443953	5213.7		5213.7	29991.1	4284.4			
	3/8/2009	50	175	0	443953	0.0		0.0	26113.2	3730.5			
	3/9/2009	45	175	5	399306	44646.3	1233.340	43413.0	65590.1	9370.0			
	3/10/2009	44.5	175	0.5	394331	4975.0	853.634	4121.4	69308.0	9901.1			
	3/11/2009	44	175	0.5	389250	5081.3		5081.3	62056.7	8865.2			
	3/12/2009	43	175	1	378975	10275.0	3220.401	7054.6	69111.3	9873.0			
	3/13/2009	51.5	175	-8.5	457563	-		-			Total Volume (scf)	80231.6	
	3/14/2009	51.5	175	0	457563	0.0	759.364	-759.4			Days	11	
	3/15/2009	51.5	175	0	457563	0.0		0.0			Average Volume/day	7293.777	
	3/16/2009	51	175	0.5	453394	4169.1	1228.083	2941.0			Avg 7 day rolling total	66510.5	
	3/17/2009	50	180	1	443705	9688.5		9688.5			Max 7 day rolling total	73241.5	
16	3/18/2009	50	180	0	443705	0.0		0.0			Max 1 Day Drop (in)	4.5	
	3/19/2009	45.5	180	4.5	403975	39730.1		39730.1			Avg 1 Day Drop (in)	0.863636	
	3/20/2009	45	180	0.5	399113	4862.5	2934.530	1928.0	53528.3	7646.9			
	3/21/2009	43.5	180	1.5	384025	15087.5	3314.408	11773.1	66060.7	9437.2			
	3/22/2009	43	185	0.5	378725	5300.0		5300.0	71360.7	10194.4			
	3/23/2009	42.5	185	0.5	373525	5200.0	378.196	4821.8	73241.5	10463.1			
	3/24/2009	42	185	0.5	368244	5281.3	472.851	4808.4	68361.4	9765.9			
	3/25/2009	51.5	175	-9.5	457563	-		-			Total Volume (scf)	85010.0	
	3/26/2009	51.5	175	0	457563	0.0	567.094	-567.1			Days	14	
	3/27/2009	51	180	0.5	453041	4521.3		4521.3			Average Volume/day	6072.145	
	3/28/2009	51	180	0	453041	0.0		0.0			Avg 7 day rolling total	54785.5	
	3/29/2009	50.5	180	0.5	448836	4205.3		4205.3			Max 7 day rolling total	69016.2	
	3/30/2009	48.5	180	2	431309	17527.4	2471.707	15055.7			Max 1 Day Drop (in)	3.5	
	3/31/2009	45	175	3.5	399306	32002.5	1039.249	30963.3			Avg 1 Day Drop (in)	0.714286	
17	4/1/2009	44.5	177.5	0.5	394247	5059.4		5059.4	59237.8	8462.5			
	4/2/2009	44	180	0.5	389100	5146.9	665.121	4481.8	64286.7	9183.8			
	4/3/2009	43.5	180	0.5	384025	5075.0		5075.0	64840.4	9262.9			
	4/4/2009	43	180	0.5	378850	5175.0	1993.839	3181.2	68021.5	9717.4			
	4/6/2009	42.5	180	0.5	373650	5200.0		5200.0	69016.2	9859.5			
	4/7/2009	42	185	0.5	368244	5406.3		5406.3	59366.8	8481.0			
	4/8/2009	42	185	0	368244	0.0	661.275	-661.3	27742.3	3963.2			
	4/9/2009	41.5	192.5	0.5	362694	5550.0	2460.674	3089.3	25772.2	3681.7			
	4/10/2009	52.5	190	-11	464451	-		-			Total Volume (scf)	78103.6	
	4/11/2009	52.5	180	0	465301	-850.1	3132.798	-3982.9			Days	13	
	4/12/2009	52	180	0.5	461274	4027.2	755.170	3272.0			Average Volume/day	6007.971	
	4/13/2009	51	180	1	453041	8232.5	2655.036	5577.5			Avg 7 day rolling total	60654.3	
	4/14/2009	50	180	1	443705	9336.3		9336.3			Max 7 day rolling total	71330.0	
	4/15/2009	49.5	180	0.5	439699	4006.0	1700.422	2305.6			Max 1 Day Drop (in)	4	
18	4/16/2009	49	180	0.5	435596	4103.0	1425.985	2677.0			Avg 1 Day Drop (in)	0.107143	
	4/17/2009	48	175	1	427256	8340.2		8340.2	27525.7	3932.2			
	4/18/2009	44	175	4	389250	38006.0		38006.0	69514.5	9930.6			

	4/19/2009	43.5	175	0.5	384163	5087.5		5087.5	71330.0	10190.0			
	4/20/2009	43	175	0.5	378975	5187.5		5187.5	70940.1	10134.3			
	4/21/2009	43	180	0	378850	125.0		125.0	61728.7	8818.4			
	4/22/2009	42.5	180	0.5	373650	5200.0		5200.0	64623.1	9231.9			
	4/23/2009	42.5	180	0	373650	0.0	3028.023	-3028.0	58918.1	8416.9			
	4/24/2009	51	180	-8.5	453041	-		-			Total Volume (scf)	89508.3	
	4/25/2009	51	180	0	453041	0.0	1609.053	-1609.1			Days	12	
	4/26/2009	50	175	1	443953	9088.9		9088.9			Average Volume/day	7459.029	
	4/27/2009	49.5	177.5	0.5	439824	4128.2		4128.2			Avg 7 day rolling total	59110.4	
	4/28/2009	48	177.5	1.5	427134	12690.4		12690.4			Max 7 day rolling total	71358.6	
	4/29/2009	45	180	3	399113	28021.5	2832.895	25188.6			Max 1 Day Drop (in)	3	
19	4/30/2009	44	180	1	389100	10012.5		10012.5			Avg 1 Day Drop (in)	0.833333	
	5/1/2009	43.5	180	0.5	384025	5075.0		5075.0	64574.5	9224.9			
	5/2/2009	43	180	0.5	378850	5175.0		5175.0	71358.6	10194.1			
	5/3/2009	43	180	0	378850	0.0	662.758	-662.8	61606.9	8801.0			
	5/4/2009	42.5	180	0.5	373650	5200.0		5200.0	62678.7	8954.1			
	5/5/2009	42	180	0.5	368363	5287.5	853.416	4434.1	54422.4	7774.6			
	5/6/2009	41	180	1	357575	10787.5		10787.5	40021.3	5717.3			
	5/7/2009	52	180	-11	461274	-		-			Total Volume (scf)	75052.3	
	5/8/2009	52	180	0	461274	0.0		0.0			Days	11	
	5/9/2009	52	180	0	461274	0.0		0.0			Average Volume/day	6822.936	
	5/10/2009	51	180	1	453041	8232.5		8232.5			Avg 7 day rolling total	57294.1	
	5/11/2009	51	180	0	453041	0.0	1319.546	-1319.5			Max 7 day rolling total	68139.3	
20	5/12/2009	50	180	1	443705	9336.3	2740.365	6596.0			Max 1 Day Drop (in)	3	
	5/13/2009	49.5	180	0.5	439699	4006.0	760.747	3245.3			Avg 1 Day Drop (in)	0.818182	
	5/14/2009	48	180	1.5	427012	12687.2		12687.2	29441.4	4205.9			
	5/15/2009	45	180	3	399113	27899.4		27899.4	57340.8	8191.5			
	5/16/2009	44	180	1	389100	10012.5		10012.5	67353.3	9621.9			
	5/17/2009	43.5	180	0.5	384025	5075.0		5075.0	64195.8	9170.8			
	5/18/2009	43	180	0.5	378850	5175.0	2551.027	2624.0	68139.3	9734.2			
	5/19/2009	51.5	180	-8.5	457187	-		-			Total Volume (scf)	80916.0	
	5/20/2009	51	180	0.5	453041	4146.0	473.398	3672.6			Days	13	
	5/21/2009	50.5	180	0.5	448836	4205.3		4205.3			Average Volume/day	6224.308	
	5/22/2009	50	180	0.5	443705	5131.0		5131.0			Avg 7 day rolling total	50080.3	
	5/23/2009	50	185	0	443458	247.4		247.4			Max 7 day rolling total	62720.3	
	5/24/2009	48	185	2	426768	16689.8		16689.8			Max 1 Day Drop (in)	3	
21	5/25/2009	45	185	3	398919	27849.2		27849.2			Avg 1 Day Drop (in)	0.692308	
	5/26/2009	44.5	185	0.5	393994	4925.0		4925.0	62720.3	8960.0			
	5/27/2009	44.5	185	0	393994	0.0		0.0	59047.7	8435.4			
	5/28/2009	44.5	185	0	393994	0.0		0.0	54842.4	7834.6			
	5/29/2009	44.5	185	0	393994	0.0		0.0	49711.4	7101.6			
	5/30/2009	44	190	0.5	388800	5193.8		5193.8	54657.7	7808.2			
	5/31/2009	43	190	1	378600	10200.0	1705.966	8494.0	46461.9	6637.4			
	6/1/2009	42.5	200	0.5	373150	5450.0	942.057	4507.9	23120.7	3303.0			
	6/2/2009	52	180	-9.5	461274	-		-			Total Volume (scf)	89811.1	
	6/3/2009	52	180	0	461274	0.0		0.0			Days	15	
	6/4/2009	52	180	0	461274	0.0	1611.599	-1611.6			Average Volume/day	5987.407	
	6/5/2009	51	180	1	453041	8232.5		8232.5			Avg 7 day rolling total	49382.9	
	6/6/2009	51	175	0	453394	-352.2		-352.2			Max 7 day rolling total	67418.4	
	6/7/2009	50	175	1	443953	9441.1	1421.638	8019.4			Max 1 Day Drop (in)	4	
	6/8/2009	50	175	0	443953	0.0		0.0			Avg 1 Day Drop (in)	0.7	
22	6/9/2009	49.5	175	0.5	439950	4003.0		4003.0	18291.2	2613.0			
	6/10/2009	49	175	0.5	435848	4101.5		4101.5	22392.7	3199.0			
	6/11/2009	48	175	1	427256	8592.1		8592.1	32596.4	4656.6			
	6/12/2009	44	175	4	389250	38006.0		38006.0	62369.8	8910.0			
	6/13/2009	44	180	0	389100	150.0		150.0	62872.0	8981.7			
	6/14/2009	43.5	180	0.5	384025	5075.0	1420.055	3654.9	58507.5	8358.2			
	6/15/2009	43	180	0.5	378850	5175.0		5175.0	63682.5	9097.5			
	6/16/2009	43	185	0	378725	125.0	3488.587	-3363.6	56315.9	8045.1			
	6/17/2009	41.5	185	1.5	362863	15862.5	658.508	15204.0	67418.4	9631.2			
	6/18/2009	51.5	180	-10	457187	-		-			Total Volume (scf)	72206.6	
	6/19/2009	51.5	180	0	457187	0.0		0.0			Days	11	
	6/20/2009	51	180	0.5	453041	4146.0		4146.0			Average Volume/day	6564.235	
	6/21/2009	50.5	185	0.5	448506	4535.5		4535.5			Avg 7 day rolling total	56080.9	
	6/22/2009	50	185	0.5	443458	5048.3		5048.3			Max 7 day rolling total	63525.1	
23	6/23/2009	49.5	185	0.5	439449	4009.0	1230.836	2778.2			Max 1 Day Drop (in)	3	
	6/24/2009	49	185	0.5	435344	4104.4		4104.4			Avg 1 Day Drop (in)	0.727273	
	6/25/2009	47.5	185	1.5	422377	12966.9		12966.9	33579.3	4797.0			
	6/26/2009	44.5	185	3	393994	28383.5		28383.5	61962.8	8851.8			
	6/27/2009	44	185	0.5	388950	5043.8		5043.8	62860.6	8980.1			
	6/28/2009	43.5	190	0.5	383750	5200.0		5200.0	63525.1	9075.0			
	6/29/2009	43.5	190	0	383750	0.0		0.0	58476.9	8353.8			
	6/30/2009	53	190	-9.5	468366	-		-			Total Volume (scf)	76599.2	
	7/1/2009	53	175	0	469721	-1354.9	2174.873	-3529.8			Days	10	
	7/2/2009	52	175	1	461674	8047.0	2169.927	5877.0			Average Volume/day	7659.919	
	7/3/2009	51.5	175	0.5	457563	4110.9	1879.083	2231.8			Avg 7 day rolling total	65699.9	
	7/4/2009	51	175	0.5	453394	4169.1		4169.1			Max 7 day rolling total	72020.1	
24	7/5/2009	50	175	1	443953	9441.1	1229.588	8211.5			Max 1 Day Drop (in)	3.5	
	7/6/2009	48.5	177.5	1.5	431432	12521.0		12521.0			Avg 1 Day Drop (in)	1	
	7/7/2009	45	180	3.5	399113	32319.1		32319.1	61799.7	8828.5			
	7/8/2009	45	175	0	399306	-193.8	1324.171	-1517.9	63811.5	9115.9			
	7/9/2009	44	175	1	389250	10056.3	2822.490	7233.8	65168.3	9309.8			
	7/10/2009	43	180	1	378850	10400.0	1316.352	9083.6	72020.1	10288.6			
	7/11/2009	52.5	182.5	-9.5	465089	-		-			Total Volume (scf)	103863.1	
	7/12/2009	52	182.5	0.5	461074	4014.5		4014.5			Days	20	
	7/13/2009	52	185	0	460874	199.8		199.8			Average Volume/day	5193.156	
	7/14/2009	51.5	185	0.5	456812	4062.3		4062.3			Avg 7 day rolling total	40964.0	

	7/15/2009	51	185	0.5	452689	4122.8		4122.8			Max 7 day rolling total	62217.0
	7/16/2009	51	187.5	0	452513	176.1		176.1			Max 1 Day Drop (in)	4
	7/17/2009	50	190	1	443210	9303.0		9303.0			Avg 1 Day Drop (in)	0.575
	7/18/2009	46	190	4	408225	34985.3	1039.893	33945.4	55823.7	7974.8		
	7/19/2009	45.5	190	0.5	403550	4675.0	756.286	3918.7	55728.0	7961.1		
	7/20/2009	45	190	0.5	398725	4825.0		4825.0	60353.2	8621.9		
25	7/21/2009	44.5	190	0.5	393825	4900.0		4900.0	61190.9	8741.6		
	7/22/2009	44	190	0.5	388800	5025.0		5025.0	62093.1	8870.4		
	7/23/2009	44	200	0	388500	300.0		300.0	62217.0	8888.1		
	7/24/2009	43.5	200	0.5	383475	5025.0		5025.0	57939.1	8277.0		
	7/25/2009	43.5	200	0	383475	0.0		0.0	23993.7	3427.7		
	7/26/2009	43.5	200	0	383475	0.0		0.0	20075.0	2867.9		
	7/27/2009	43.5	200	0	383475	0.0		0.0	15250.0	2178.6		
	7/28/2009	42.5	210	1	372900	10575.0	1412.868	9162.1	19512.1	2787.4		
	7/29/2009	41.5	210	1	362300	10600.0		10600.0	25087.1	3583.9		
	7/30/2009	41	210	0.5	356900	5400.0		5400.0	30187.1	4312.4		
	7/31/2009	41	215	0	356788	112.5	1228.965	-1116.5	24045.7	3435.1		
	8/1/2009	52.5	175	-11.5	465726	-		-				
26	8/2/2009	52	175	0.5	461674	4052.6	1130.294	2922.3				
	8/3/2009	51.5	175	0.5	457563	4110.9		4110.9				
	8/4/2009	51.5	175	0	457563	0.0		0.0				

Average	6774.8
Max	46394.2

Using Leakage =	80,422
Total N2 required =	320,000 (200,000 for CAD, 39,578.215 for SGIG, 80,421.6 Leakage)

Summary (7 Days of leakage)	
Total Volume (scf)	2,135,135
Total Days	337
Average Volume/day (tot/day)	6,336
Average Volume/day (avgd ind)	6,453
Avg 7 day rolling total	53,498
Max 7 day rolling total	74,917

CAD + SGIG		
Using 38* N2 =	322,000	(322,000 at 250psig)
Required CAD + SGIG Amount=	320,000	0.62%
Margin above avg (38*)=	28,924	8.98%
Margin above Max (38*) =	7,505	2.33%
Using 38.5* N2 =	327,800	SCF at 250 psig
Required CAD + SGIG Amount=	320,000	2.38%
Margin above avg (38.5*)=	34,724	10.59%
Margin above Max (38.5*) =	13,305	4.06%

SGIG Only		
Using 22* N2 =	124,000	SCF at 250 psig
Required SGIG amount (scf) =	120,000	3.23%
Margin above avg (scf) =	30,924	24.94%
Margin above Max (scf) =	9,505	7.67%

						Min D/W Volume	159,000	cu ft	4502.378673	cubic meters
						Max D/W Volume	175,800	cu ft	4978.101703	cubic meters
						Avge DW Volume	167,400	cu ft	4740.240188	cubic meters
[illegible]	[illegible]	[illegible]	[illegible]	[illegible]	[illegible]	[illegible]	[illegible]	[illegible]	[illegible]	[illegible]
8/9/08 6:00	0.27	0.3	3	0.03	206.843	132.8336	329.019	358.435	8028.937	283.539
8/9/08 10:00	0.27	0.4	3	0.13	896.318	132.8336	329.019	1553.217	34792.060	1228.670
8/14/08 18:00	0.28	0.36	3	0.08	551.581	132.3673	328.760	956.579	21427.369	756.700
8/18/08 3:00	0.3	0.4	3	0.1	689.476	132.51719	328.843	1195.421	26777.429	945.636
8/20/08 5:00	0.29	0.35	2	0.06	413.685	131.19139	328.106	718.863	16102.525	568.655
8/21/08 6:00	0.29	0.35	2	0.06	413.685	131.04139	328.023	719.045	16106.615	568.800
8/30/08 22:00	0.29	0.4	2	0.11	758.423	130.5913	327.773	1319.255	29551.322	1043.595
8/31/08 0:00	0.3	0.4	3	0.1	689.476	131.39291	328.218	1197.696	26828.387	947.436
9/8/08 5:00	0.29	0.45	2	0.16	1103.161	130.8914	327.940	1917.941	42961.888	1517.185
9/8/08 7:00	0.3	0.4	3	0.1	689.476	132.83361	329.019	1194.782	26763.123	945.131
9/11/08 12:00	0.29	0.4	3	0.11	758.423	132.23391	328.686	1315.593	29469.276	1040.698
9/22/08 11:00	0.28	0.42	3	0.14	965.266	131.97599	328.542	1675.121	37522.709	1325.102
10/4/08 10:00	0.28	0.33	3	0.05	344.738	131.0181	328.010	599.228	13422.709	474.018
10/6/08 3:00	0.28	0.35	3	0.07	482.633	131.168	328.093	838.706	18787.023	663.457
10/7/08 5:00	0.26	0.34	3	0.08	551.581	130.8682	327.927	959.008	21481.788	758.622
10/10/08 23:00	0.27	0.33	3	0.06	413.685	130.86821	327.927	719.256	16111.341	568.967
10/11/08 6:00	0.27	0.45	3	0.18	1241.056	130.7346	327.853	2158.257	48344.966	1707.286
10/19/08 7:00	0.25	0.33	3	0.08	551.581	130.4185	327.677	959.740	21498.167	759.201
10/21/08 15:00	0.3	0.53	2	0.23	1585.794	119.63999	321.689	2810.613	62957.737	2223.332
10/22/08 13:00	0.27	0.35	3	0.08	551.581	130.62701	327.793	959.400	21490.570	758.932
10/23/08 6:00	0.3	0.45	2	0.15	1034.214	133.27501	329.264	1790.839	40114.786	1416.640
10/29/08 22:00	0.3	0.48	2	0.18	1241.056	132.82501	329.014	2150.639	48174.320	1701.260
10/30/08 1:00	0.26	0.41	3	0.15	1034.214	129.4603	327.145	1802.440	40374.654	1425.817
10/30/08 9:00	0.26	0.35	2	0.09	620.528	132.9916	329.106	1075.017	24080.386	850.391
10/30/08 9:00	0.28	0.37	3	0.09	620.528	129.4603	327.145	1081.464	24224.793	855.490
10/30/08 10:00	0.33	0.41	3	0.08	551.581	129.4603	327.145	961.301	21533.149	760.436
11/2/08 20:00	0.3	0.39	2	0.09	620.528	133.2917	329.273	1074.473	24068.194	849.960
11/2/08 2:00	0.29	0.4	3	0.11	758.423	130.05999	327.478	1320.445	29577.958	1044.536
11/2/08 7:00	0.29	0.5	2	0.21	1447.899	133.2917	329.273	2507.104	56159.119	1983.241
11/2/08 12:00	0.27	0.35	3	0.08	551.581	130.05999	327.478	960.323	21511.242	759.662
11/6/08 18:00	0.47	0.49	3	0.02	137.895	132.29231	328.718	239.175	5357.521	189.199
11/10/08 6:00	0.28	0.45	3	0.17	1172.109	132.3089	328.727	2032.931	45537.654	1608.147
11/10/08 22:00	0.31	0.46	2	0.15	1034.214	134.1918	329.773	1788.073	40052.829	1414.452
11/10/08 23:00	0.26	0.6	3	0.34	2344.217	132.3089	328.727	4065.862	91075.308	3216.294
11/12/08 2:00	0.25	0.4	2	0.15	1034.214	134.175	329.764	1788.123	40053.963	1414.492
11/18/08 23:00	0.3	0.49	2	0.19	1310.004	134.1918	329.773	2264.892	50733.584	1791.640
11/22/08 3:00	0.27	0.44	3	0.17	1172.109	132.30889	328.727	2032.931	45537.655	1608.147
11/23/08 2:00	0.3	0.35	2	0.05	344.738	133.74169	329.523	596.477	13361.075	471.842
12/1/08 18:00	0.27	0.35	3	0.08	551.581	132.89201	329.051	955.732	21408.387	756.030
12/2/08 7:00	0.27	0.5	3	0.23	1585.794	132.7586	328.977	2748.347	61562.979	2174.076
12/2/08 18:00	0.3	0.4	2	0.1	689.476	133.89171	329.607	1192.651	26715.392	943.445
12/3/08 5:00	0.3	0.35	2	0.05	344.738	134.04179	329.690	596.175	13354.318	471.603
12/8/08 0:00	0.28	0.3	3	0.02	137.895	132.36729	328.760	239.145	5356.842	189.175
12/8/08 10:00	0.27	0.4	2	0.13	896.318	133.5917	329.440	1551.231	34747.581	1227.099
12/8/08 11:00	0.26	0.45	3	0.19	1310.004	132.36729	328.760	2271.875	50890.003	1797.164
12/13/08 13:00	0.27	0.44	3	0.17	1172.109	132.6087	328.894	2031.901	45514.593	1607.333
12/13/08 4:00	0.3	0.46	2	0.16	1103.161	134.1918	329.773	1907.278	42723.018	1508.749
12/13/08 16:00	0.27	0.43	3	0.16	1103.161	132.6087	328.894	1912.378	42837.264	1512.784
12/16/08 12:00	0.28	0.4	3	0.12	827.371	132.1589	328.644	1435.374	32152.377	1135.450
12/18/08 9:00	0.28	0.4	3	0.12	827.371	132.66709	328.926	1434.142	32124.780	1134.476
12/22/08 12:00	0.29	0.35	3	0.06	413.685	132.36729	328.760	717.434	16070.527	567.525
12/22/08 12:00	0.27	0.29	2	0.02	137.895	134.34179	329.857	238.349	5339.028	188.546
12/22/08 18:00	0.28	0.39	3	0.11	758.423	132.36729	328.760	1315.296	29462.633	1040.463
12/22/08 22:00	0.29	0.43	2	0.14	965.266	134.34179	329.857	1668.446	37373.197	1319.822
12/23/08 1:00	0.27	0.33	3	0.06	413.685	132.45881	328.810	717.323	16068.042	567.438
1/10/09 2:00	0.28	0.33	3	0.05	344.738	132.817	329.009	597.408	13381.937	472.579
1/15/09 9:00	0.28	0.39	3	0.11	758.423	132.30891	328.727	1315.426	29465.540	1040.566
1/15/09 16:00	0.3	0.39	2	0.09	620.528	135.692	330.607	1070.139	23971.115	846.532

1/15/09 22:00	0.28	0.4	3	0.12	827.371	132.30891	328.727	1435.010	32144.226	1135.163
1/16/09 1:00	0.27	0.51	2	0.24	1654.742	135.3169	330.398	2855.504	63963.290	2258.842
1/24/09 18:00	0.27	0.41	2	0.14	965.266	135.692	330.607	1664.661	37288.401	1316.827
1/25/09 5:00	0.28	0.4	2	0.12	827.371	135.39189	330.440	1427.572	31977.613	1129.279
1/26/09 9:00	0.27	0.4	2	0.13	896.318	135.3169	330.398	1546.731	34646.782	1223.540
2/4/09 10:00	0.27	0.42	3	0.15	1034.214	131.40931	328.227	1796.494	40241.463	1421.114
2/9/09 10:00	0.27	0.45	2	0.18	1241.056	132.54159	328.856	2151.669	48197.386	1702.075
2/16/09 18:00	0.28	0.4	3	0.12	827.371	133.3583	329.310	1432.470	32087.319	1133.153
2/21/09 3:00	0.28	0.45	3	0.17	1172.109	134.10789	329.727	2026.769	45399.624	1603.273
2/21/09 4:00	0.29	0.43	2	0.14	965.266	130.125	327.514	1680.380	37640.522	1329.263
2/24/09 1:00	0.28	0.47	3	0.19	1310.004	134.1079	329.727	2265.212	50740.756	1791.893
3/3/09 12:00	0.26	0.52	3	0.26	1792.637	134.01629	329.676	3100.243	69445.437	2452.442
3/3/09 23:00	0.28	0.4	2	0.12	827.371	130.59129	327.773	1439.188	32237.806	1138.467
3/9/09 22:00	0.27	0.4	2	0.13	896.318	130.59131	327.773	1559.120	34924.289	1233.340
3/10/09 9:00	0.26	0.35	2	0.09	620.528	130.74129	327.856	1079.116	24172.209	853.634
3/12/09 4:00	0.27	0.48	2	0.21	1447.899	130.5913	327.773	2518.579	56416.160	1992.318
3/12/09 6:00	0.27	0.4	3	0.13	896.318	133.1168	329.176	1552.475	34775.431	1228.083
3/13/09 1:00	0.28	0.36	2	0.08	551.581	130.2913	327.606	959.947	21502.804	759.364
3/16/09 13:00	0.29	0.42	3	0.13	896.318	133.11679	329.176	1552.475	34775.431	1228.083
3/20/09 7:00	0.28	0.44	3	0.16	1103.161	133.4166	329.343	1909.772	42778.885	1510.722
3/20/09 13:00	0.29	0.44	2	0.15	1034.214	130.29131	327.606	1799.900	40317.757	1423.808
3/21/09 8:00	0.27	0.35	3	0.08	551.581	132.9669	329.093	955.611	21405.680	755.934
3/21/09 11:00	0.29	0.44	2	0.15	1034.214	129.97501	327.431	1800.866	40339.394	1424.572
3/21/09 15:00	0.26	0.38	3	0.12	827.371	132.9669	329.093	1433.416	32108.521	1133.902
3/23/09 21:00	0.26	0.3	3	0.04	275.790	132.6087	328.894	478.094	10709.316	378.196
3/24/09 6:00	0.25	0.3	3	0.05	344.738	132.47531	328.820	597.753	13389.662	472.851
3/25/09 3:00	0.29	0.35	3	0.06	413.685	132.81699	329.009	716.889	16058.324	567.094
3/30/09 9:00	0.29	0.45	2	0.16	1103.161	129.3912	327.106	1922.828	43071.352	1521.050
3/30/09 23:00	0.26	0.36	2	0.1	689.476	129.3912	327.106	1201.768	26919.595	950.657
3/31/09 9:00	0.29	0.4	3	0.11	758.423	133.05851	329.144	1313.762	29428.259	1039.249
4/2/09 0:00	0.43	0.5	2	0.07	482.633	129.69119	327.273	840.809	18834.121	665.121
4/4/09 22:00	0.29	0.5	2	0.21	1447.899	130.14129	327.523	2520.501	56459.223	1993.839
4/8/09 14:00	0.28	0.35	3	0.07	482.633	133.1168	329.176	835.948	18725.232	661.275
4/9/09 2:00	0.28	0.45	3	0.17	1172.109	133.1168	329.176	2030.159	45475.563	1605.954
4/9/09 5:00	0.28	0.37	2	0.09	620.528	129.9913	327.440	1080.490	24202.968	854.720
4/11/09 21:00	0.25	0.34	3	0.09	620.528	133.26671	329.259	1074.518	24069.209	849.996
4/11/09 23:00	0.26	0.5	2	0.24	1654.742	129.075	326.931	2885.792	64641.743	2282.802
4/12/09 6:00	0.26	0.34	3	0.08	551.581	133.5665	329.426	954.644	21384.035	755.170
4/13/09 2:00	0.26	0.36	3	0.1	689.476	133.1168	329.176	1194.211	26750.331	944.679
4/13/09 10:00	0.29	0.47	2	0.18	1241.056	129.67501	327.264	2162.140	48431.926	1710.357
4/15/09 23:00	0.27	0.45	3	0.18	1241.056	133.1168	329.176	2149.580	48150.596	1700.422
4/16/09 11:00	0.29	0.44	2	0.15	1034.214	129.3912	327.106	1802.651	40379.393	1425.985
4/23/09 23:00	0.28	0.45	3	0.17	1172.109	133.35829	329.310	2029.332	45457.036	1605.300
4/23/09 16:00	0.28	0.43	2	0.15	1034.214	130.74129	327.856	1798.527	40287.015	1422.723
4/24/09 11:00	0.27	0.37	3	0.1	689.476	133.2667	329.259	1193.909	26743.565	944.440
4/25/09 9:00	0.28	0.35	2	0.07	482.633	130.1413	327.523	840.167	18819.741	664.613
4/29/09 6:00	0.27	0.33	3	0.06	413.685	134.61589	330.009	714.718	16009.694	565.377
4/29/09 9:00	0.29	0.4	2	0.11	758.423	131.1914	328.106	1317.915	29521.295	1042.535
4/29/09 10:00	0.27	0.4	3	0.13	896.318	134.61589	330.009	1548.557	34687.670	1224.983
5/3/09 23:00	0.43	0.5	2	0.07	482.633	131.79149	328.440	837.822	18767.209	662.758
5/5/09 1:00	0.4	0.49	2	0.09	620.528	130.8914	327.940	1078.842	24166.062	853.416
5/11/09 0:00	0.27	0.41	3	0.14	965.266	134.46599	329.926	1668.097	37365.381	1319.546
5/11/09 2:00	0.28	0.45	2	0.17	1172.109	131.4914	328.273	2035.744	45600.655	1610.372
5/12/09 15:00	0.26	0.41	3	0.15	1034.214	134.1662	329.759	1788.150	40054.557	1414.513
5/12/09 23:00	0.28	0.42	2	0.14	965.266	131.64149	328.356	1676.069	37543.945	1325.852
5/13/09 6:00	0.29	0.37	3	0.08	551.581	129.2193	327.011	961.695	21541.965	760.747
5/18/09 10:00	0.29	0.42	2	0.13	896.318	131.64148	328.356	1556.350	34862.235	1231.148
5/18/09 22:00	0.26	0.4	3	0.14	965.266	134.31609	329.842	1668.519	37374.815	1319.879
5/19/09 2:00	0.32	0.33	2	0.01	68.948	131.7915	328.440	119.689	2681.030	94.680
5/19/09 7:00	0.33	0.37	2	0.04	275.790	131.7915	328.440	478.755	10724.119	378.719
5/31/09 23:00	0.29	0.47	2	0.18	1241.056	131.1914	328.106	2156.588	48307.573	1705.966
6/1/09 3:00	0.32	0.42	3	0.1	689.476	134.76581	330.092	1190.897	26676.090	942.057
6/4/09 15:00	0.28	0.45	2	0.17	1172.109	131.0414	328.023	2037.295	45635.410	1611.599
6/7/09 7:00	0.29	0.44	2	0.15	1034.214	131.1914	328.106	1797.157	40256.311	1421.638
6/14/09 11:00	0.28	0.33	2	0.05	344.738	131.84999	328.472	598.385	13403.823	473.352
6/14/09 23:00	0.29	0.39	2	0.1	689.476	131.84999	328.472	1196.770	26807.646	946.703

6/16/09 0:00	0.26	0.38	3	0.12	827.371	136.05701	330.809	1425.977	31941.894	1128.017
6/16/09 6:00	0.29	0.4	2	0.11	758.423	131.64151	328.356	1316.911	29498.813	1041.741
6/16/09 16:00	0.3	0.34	2	0.04	275.790	131.64151	328.356	478.877	10726.841	378.815
6/16/09 18:00	0.28	0.38	3	0.1	689.476	136.05701	330.809	1188.315	26618.245	940.014
6/17/09 13:00	0.25	0.32	3	0.07	482.633	135.60719	330.560	832.449	18646.858	658.508
6/23/09 9:00	0.3	0.43	2	0.13	896.318	131.7915	328.440	1555.955	34853.388	1230.836
6/30/09 22:00	0.29	0.52	2	0.23	1585.794	132.54161	328.856	2749.355	61585.547	2174.873
7/2/09 11:00	0.28	0.38	3	0.1	689.476	135.45731	330.476	1189.513	26645.080	940.962
7/2/09 22:00	0.29	0.42	2	0.13	896.318	132.69159	328.940	1553.589	34800.405	1228.965
7/3/09 23:00	0.28	0.48	3	0.2	1378.951	136.35679	330.976	2375.433	53209.702	1879.083
7/5/09 11:00	0.3	0.43	2	0.13	896.318	132.3916	328.773	1554.377	34818.046	1229.588
7/8/09 6:00	0.29	0.43	2	0.14	965.266	132.3916	328.773	1673.944	37496.357	1324.171
7/9/09 1:00	0.26	0.39	3	0.13	896.318	136.71459	331.175	1543.105	34565.547	1220.671
7/9/09 14:00	0.27	0.38	3	0.11	758.423	136.71459	331.175	1305.704	29247.771	1032.875
7/9/09 23:00	0.3	0.36	2	0.06	413.685	130.8914	327.940	719.228	16110.708	568.944
7/10/09 4:00	0.27	0.41	3	0.14	965.266	135.90709	330.726	1664.059	37274.928	1316.352
7/18/09 23:00	0.31	0.42	2	0.11	758.423	132.6916	328.940	1314.576	29446.496	1039.893
7/19/09 9:00	0.32	0.4	2	0.08	551.581	132.69162	328.940	956.055	21415.633	756.286
7/28/09 10:00	0.28	0.43	3	0.15	1034.214	134.85761	330.143	1786.069	40007.954	1412.868
7/31/09 23:00	0.28	0.41	2	0.13	896.318	132.6916	328.940	1553.589	34800.404	1228.965
8/1/09 8:00	0.28	0.4	3	0.12	827.371	134.8576	330.143	1428.856	32006.364	1130.294

Total Usage = 165911.6
Avg per day = 463.4
Average Fill = 1144.2

Pressure / Level	170	172.5	175	177.5	180	182.5	185	187.5	190	192.5	195	197.5	200	202.5	205	207.5	210	212.5	215	217.5	220	250
33	265700	265550	265400	265250	265100	264950	264800	264650	264500	264350	264200	264050	263900	263750	263600	263450	263300	263150	263000	262850	262700	260900
33.25	268650	268506	268363	268219	268075	267931	267788	267644	267500	267356	267213	267069	266925	266781	266638	266494	266350	266206	266063	265919	265775	264050
33.5	271600	271463	271325	271188	271050	270913	270775	270638	270500	270363	270225	270088	269950	269813	269675	269538	269400	269263	269125	268988	268850	267200
33.75	274550	274417	274284	274152	274019	273886	273753	273620	273488	273355	273222	273089	272956	272823	272691	272558	272425	272292	272159	272027	271894	270300
34	277500	277372	277244	277116	276988	276859	276731	276603	276475	276347	276219	276091	275963	275834	275706	275578	275450	275322	275194	275066	274938	273400
34.25	280500	280375	280250	280125	280000	279875	279750	279625	279500	279375	279250	279125	279000	278875	278750	278625	278500	278375	278250	278125	278000	276500
34.5	283500	283378	283256	283134	283013	282891	282769	282647	282525	282403	282281	282159	282038	281916	281794	281672	281550	281428	281306	281184	281063	279600
34.75	286450	286333	286216	286098	285981	285864	285747	285630	285513	285395	285278	285161	285044	284927	284809	284692	284575	284458	284341	284223	284106	282700
35	289400	289288	289175	289063	288950	288838	288725	288613	288500	288388	288275	288163	288050	287938	287825	287713	287600	287488	287375	287263	287150	285800
35.25	292300	292192	292084	291977	291869	291761	291653	291545	291438	291330	291222	291114	291006	290898	290791	290683	290575	290467	290359	290252	290144	288850
35.5	295200	295097	294994	294891	294788	294684	294581	294478	294375	294272	294169	294066	293963	293859	293756	293653	293550	293447	293344	293241	293138	291900
35.75	298150	298050	297950	297850	297750	297650	297550	297450	297350	297250	297150	297050	296950	296850	296750	296650	296550	296450	296350	296250	296150	294950
36	301100	301003	300906	300809	300713	300616	300519	300422	300325	300228	300131	300034	299938	299841	299744	299647	299550	299453	299356	299259	299163	298000
36.25	304000	303908	303816	303723	303631	303539	303447	303355	303263	303170	303078	302986	302894	302802	302709	302617	302525	302433	302341	302248	302156	301050
36.5	306900	306813	306725	306638	306550	306463	306375	306288	306200	306113	306025	305938	305850	305763	305675	305588	305500	305413	305325	305238	305150	304100
36.75	309800	309716	309631	309547	309463	309378	309294	309209	309125	309041	308956	308872	308788	308703	308619	308534	308450	308366	308281	308197	308113	307100
37	312700	312619	312538	312456	312375	312294	312213	312131	312050	311969	311888	311806	311725	311644	311563	311481	311400	311319	311238	311156	311075	310100
37.25	315600	315522	315444	315366	315288	315209	315131	315053	314975	314897	314819	314741	314663	314584	314506	314428	314350	314272	314194	314116	314038	313100
37.5	318500	318425	318350	318275	318200	318125	318050	317975	317900	317825	317750	317675	317600	317525	317450	317375	317300	317225	317150	317075	317000	316100
37.75	321350	321278	321206	321134	321063	320991	320919	320847	320775	320703	320631	320559	320488	320416	320344	320272	320200	320128	320056	319984	319913	319050
38	324200	324131	324063	323994	323925	323856	323788	323719	323650	323581	323513	323444	323375	323306	323238	323169	323100	323031	322963	322894	322825	322000
38.25	327050	326983	326916	326848	326781	326714	326647	326580	326513	326445	326378	326311	326244	326177	326109	326042	325975	325908	325841	325773	325706	324900
38.5	329900	329834	329769	329703	329638	329572	329506	329441	329375	329309	329244	329178	329113	329047	328981	328916	328850	328784	328719	328653	328588	327800
38.75	332750	332686	332622	332558	332494	332430	332366	332302	332238	332173	332109	332045	331981	331917	331853	331789	331725	331661	331597	331533	331469	330700
39	335600	335538	335475	335413	335350	335288	335225	335163	335100	335038	334975	334913	334850	334788	334725	334663	334600	334538	334475	334413	334350	333600
39.25	338400	338339	338278	338217	338156	338095	338034	337973	337913	337852	337791	337730	337669	337608	337547	337486	337425	337364	337303	337242	337181	336450
39.5	341200	341141	341081	341022	340963	340903	340844	340784	340725	340666	340606	340547	340488	340428	340369	340309	340250	340191	340131	340072	340013	339300
39.75	344000	343942	343884	343827	343769	343711	343653	343595	343538	343480	343422	343364	343306	343248	343191	343133	343075	343017	342959	342902	342844	342150
40	346800	346744	346688	346631	346575	346519	346463	346406	346350	346294	346238	346181	346125	346069	346013	345956	345900	345844	345788	345731	345675	345000
40.25	349550	349494	349438	349381	349325	349269	349213	349156	349100	349044	348988	348931	348875	348819	348763	348706	348650	348594	348538	348481	348425	347750
40.5	352300	352244	352188	352131	352075	352019	351963	351906	351850	351794	351738	351681	351625	351569	351513	351456	351400	351344	351288	351231	351175	350500
40.75	355050	354994	354938	354881	354825	354769	354713	354656	354600	354544	354488	354431	354375	354319	354263	354206	354150	354094	354038	353981	353925	353250
41	357800	357744	357688	357631	357575	357519	357463	357406	357350	357294	357238	357181	357125	357069	357013	356956	356900	356844	356788	356731	356675	356000
41.25	360500	360444	360388	360331	360275	360219	360163	360106	360050	359994	359938	359881	359825	359769	359713	359656	359600	359544	359488	359431	359375	358700
41.5	363200	363144	363088	363031	362975	362919	362863	362806	362750	362694	362638	362581	362525	362469	362413	362356	362300	362244	362188	362131	362075	361400
41.75	365900	365842	365784	365727	365669	365611	365553	365495	365438	365380	365322	365264	365206	365148	365091	365033	364975	364917	364859	364802	364744	364050
42	368600	368541	368481	368422	368363	368303	368244	368184	368125	368066	368006	367947	367888	367828	367769	367709	367650	367591	367531	367472	367413	366700
42.25	371250	371189	371128	371067	371006	370945	370884	370823	370763	370702	370641	370580	370519	370458	370397	370336	370275	370214	370153	370092	370031	369300
42.5	373900	373838	373775	373713	373650	373588	373525	373463	373400	373338	373275	373213	373150	373088	373025	372963	372900	372838	372775	372713	372650	371900
42.75	376500	376438	376375	376313	376250	376188	376125	376063	376000	375938	375875	375813	375750	375688	375625	375563	375500	375438	375375	375313	375250	374500
43	379100	379038	378975	378913	378850	378788	378725	378663	378600	378538	378475	378413	378350	378288	378225	378163	378100	378038	377975	377913	377850	377100
43.25	381700	381634	381569	381503	381438	381372	381306	381241	381175	381109	381044	380978	380913	380847	380781	380716	380650	380584	380519	380453	380388	379600
43.5	384300	384231	384163	384094	384025	383956	383888	383819	383750	383681	383613	383544	383475	383406	383338	383269	383200	383131	383063	382994	382925	382100
43.75	386850	386778	386706	386634	386563	386491	386419	386347	386275	386203	386131	386059	385988	385916	385844	385772	385700	385628	385556	385484	385413	384550
44	389400	389325	389250	389175	389100	389025	388950	388875	388800	388725	388650	388575	388500	388425	388350	388275	388200	388125	388050	387975	387900	387000
44.25	391950	391870	391791	391711	391631	391552	391472	391392	391313	391233	391153	391073	390994	390914	390834	390755	390675	390595	390516	390436	390356	389400
44.5	394500	394416	394331	394247	394163	394078	393994	393909	393825	393741	393656	393572	393488	393403	393319	393234	393150	393066	392981	392897	392813	391800
44.75	397000	396909	396819	396728	396638	396547	396456	396366	396275	396184	396094	396003	395913	395822	395731	395641	395550	395459	395369	395278	395188	394100
45	399500	399403	399306	399209	399113	399016	398919	398822	398725	398628	398531	398434	398338	398241	398144	398047	397950	397853	397756	397659	397563	396400
45.25	401950	401848	401747	401645	401544	401442	401341	401239	401138	401036	400934	400833	400731	400630	400528	400427	400325	400223	400122	400020	399919	398700
45.5	404400	404294	404188	404081	403975	403869	403763	403656	403550	403444	403338	403231	403125	403019	402913	402806	402700	402594	402488	402381	402275	401000
45.75	406800	406686	406572	406458	406344	406230	406116	406002	405888	405773	405659	405545	405431	405317	405203	405089	404975	404861	404747	404633	404519	403150
46	409200	409078	408956	408834	408713	408591	408469	408347	408225	408103	407981	407859	407738	407616	407494	407372	407250	407128	407006	406884	406763	405300
46.25	411550	411422	411294	411166	411038	410909	410781	410653	410525	410397	410269	410141	410013	409884	409756	409628	409500	409372	409244	409116	408988	407450
46.5	413900	413766	413631	413497	413363	413228	413094	412959	412825	412691	412556	412422	412288	412153	412019	411884	411750	411616	411481	411347	411213	409600
46.75	416200	416075	415951	415826	415701	415577	415452	415327	415203	415078	414953	414828	414704	414579	414454	414330	414205	414080	413956	413831	413706	412210.04
47	418500	418385	418270	418155	418040	417925	417810	417695	417580	417465	417350	417235	417120	417005	416890	416775	416660	416545	416430	416315	416200	414820.08
47.25	420800	420682	420565	420447	420329	420211	420094	419976	419858	419740	419623	419505	419387	419270	419152	419034	418916	418799	418681	418563	418445	417032.79
47.5	423100	422980	422859	422739	422618	422498	422377	422257	422136	422016	421895	421775	421655	421534	421414	421293	421173	421052	420932	420811	420691	419245.5
47.75	425300	425179	425058	424936	424815	424694	424573	424451	424330	424209	424088	423966	423845	423724	423603	423481	423360	423239	423118	422997	422875	421420.49
48	427500	427378	427256	427134	427012	426890	426768	426646	426524	426402	426280	426158	426036	425914	425792	425670	425548	425426	425304	425182	425060	423595.48
48.25	429650	429528	429405	429283	429160	429038	428916	428793	428671	428548	428426	428303	428181	428059	427936	427814	427691	427569	427447	427324	427202	425732.75
48.5	431800	431677	431554	431432	431309	431186	431063	430940	430818	430695	430572	430449	430326	430203	430081	429958	429835	429712	429589	429467	429344	427870.02
48.75	433950	433826	433701	433577	433452	433328	433204	433079	432955	432831	432706	432582	432457	432333	432209	432084	431960	431835	431711	431587	431462	429969.57
49	436100	435974	435848	435722	435596	435470	435344	435218	435092	434966	434840	434714	434588	434462	434336	434211	434085	433959	433833	433707	433581	432069.12
49.25	438150	438024	437899	437773	437648	437522	437396	437271	437145	437020	436894	436768	436643	436517	436392	436266	436140	436015	435889	435764	435638	434130.95
49.5	440200	440075	439950	439824	439699	439574	439449	439323	439198	439073	438948	438823	438697	438572	438447	438322	438196	438071	437946	437821	437695	436192.78
49.75	442200	442076	441951	441827	441702	441578	441453	441329	441204	441080	440955	440831	440706	440582	440457	440333	440208	440084	439960	439835	439711	438216.89
50	444200	444076	443953	443829	443705	443581	443458	443334	443210	443087	442963	442839	442715	442592	442468	442344	442221	442097	441973	441849	441726	440241
50.25	446848	446704	446559	446415	446271	446126	445982	445837	445693	445549	445404	445260	445115	444971	444827	444682	444538	444393	444249	444105	443960	442227.39
50.5	449496	449331	449166	449001	448836	448671	448506	448341	448176	448011	447846	447681	447515	447350	447185	447020	446855	446690	446525	446360	446195	444213.78
50.75	451621	451451	451280	451109	450939	450768	450598	450427	450256	450086	449915	449745	449574	449404	449233	449062	448892	448721	448551	448380	448209	446162.45
51	453746	453570	453394	453218	453041	452865	452689	452513	452337	452161	451985	451809	451633	451457	451281	451105	450928	450752	450576	450400	450224	448111.12
51.25	455842	455660	455478	455296	455114	454933	454751	454569	454387	454205	454023	453841	453659	453478	453296	453114	452932	452750	452568	452386	452205	450022.07
51.5	457938	457750	457563	457375	457187	457000	456812	456624	456437	456249	456061	455874	455686	455499	455311	455123	454936	454748	454560	454373	454185	451933.02
51.75	460006	459812	459618	459424	459231	459037	458843	458650	458456	458262	458068	457875	457681	457487	457293	457100	456906	456712	456518	456325	456131	453806.25
52	462073	461873	461674	461474	461274	461074	460874	460675	460475	460275	460075	459875	459676	459476	459276	459076	458876	458677	458477	458277	458077	455679.48
52.25	464112	463906	463700	463494	463288	463081	462875	462669	462463	462257	462051	461844	461638	461432	461226	461020	460814	460607	460401	460195	459989	457514.99
52.5	466151	465939	465726	465514	465301	465089	464876	464664	464451	464239	464026	463813	463601	463388	463176	462963	462751	462538	462326	462113	461901	459350.5
52.75	468162	467943	467723	467504	467285	467066	466847	466628	466408	466189	465970	465751	465532	465313	465093	464874	464655	464436	464217	463997	463778	461148.29
53	470172	469946	469721	469495	469269	469043	468817	468591	468366	468140	467914	467688	467462	467237	467011	466785	466559	466333	466108	465882	465656	462946.08
53.25	472154	471921	471689	471456	471223	470990	470758	470525	470292	470059	469827	469594	469361	469128	468896	468663	468430	468197	467965	467732	467499	464706.15
53.5	474136	473896	473657	473417	473177	472938	472698	472458	472219	471979	471739	471500	471260	471020	470780	470541	470301	470061	469822	469582	469342	466466.22
53.75	476089	475843	475596	475349	475102	474855	474608	474361	474114	473867	473620	473374	473127	472880	472633	472386	472139	471892	471645	471398	471151	468188.57
54	478043	477789	477535	477280	477026	476772	476518	476264	476010	475756	475502	475247	474993	474739	474485	474231	473977	473723	473469	473214	472960	469910.92
54.25	479968	479706	479444	479183	478921	478659	478398	478136	477875	477613	477351	477090	476828	476566	476305	476043	475782	475520	475258	474997	474735	471595.55
54.5	481892	481623	481354	481085	480816	480547	480278	480009	479739	479470	479201	478932	478663	478394	478125	477855	477586	477317	477048	476779	476510	473280.18
54.75	483789	483512	483235	482958	482681	482404	482127	481850	481573	481296	481019	480743	480466	480189	479912	479635	479358	479081	478804	478527	478250	474927.09
55	485685	485400	485116	484831	484546	484261	483977	483692	483407	483123	482838	482553	482268	481984	481699	481414	481130	480845	480560	480275	479991	476574
55.25	487553	487260	486967	486674	486382	486089	485796	485503	485210	484918	484625	484332	484039	483746	483454	483161	482868	482575	482282	481990	481697	478183.19
55.5	489420	489120	488819	488518	488217	487916	487615	487314	487013	486713	486412	486111	485810	485509	485208	484907	484606	484306	484005	483704	483403	479792.38
55.75	491260	490950	490641	490332	490023	489713	489404	489095	488786	488476	488167	487858	487549	487239	486930	486621	486312	486002	485693	485384	485075	481363.85
56	493099	492781	492464	492146	491828	491511	491193	490876	490558	490240	489923	489605	489287	488970	488652	488335	488017	487699	487382	487064	486747	482935.32
56.25	494909	494583	494257	493931	493604	493278	492952	492626	492299	491973	491647	491321	490994	490668	490342	490016	489689	489363	489037	488710	488384	484469.07
56.5	496720	496385	496050	495715	495380	495045	494711	494376	494041	493706	493371	493036	492701	492366	492031	491696	491361	491027	490692	490357	490022	486002.82