Murray Selman
Vice President

Consolidated Edison Company of New York, Inc.
Indian Point Station
Broadway & Bleakley Avenue
Buchanan, NY 10511
Telephone (914) 737-8116

September 3, 1987

Re: Indian Point Unit No. 2
Docket No. 50-247

U.S. Nuclear Regulatory Commission
Attn: Document Control Desk
Washington, DC 20555

Subject: Second Ten-Year Interval Inservice Inspection Program - Transmittal of Supplemental Information

By letter dated May 27, 1987, you requested additional information concerning our Second Ten-Year Interval Inservice Inspection Program, originally submitted on September 30, 1985. By letter dated June 25, 1987, we responded with our schedule to submit that additional information. Items A through I, as well as P, were transmitted by letter dated July 17, 1987. Items J through O are transmitted herewith in Enclosure I to this letter. Enclosure II to this letter includes Revision I to Relief Requests 4 and 8. If, after review of this material, further discussion may be warranted, we will arrange for knowledgeable personnel to meet with your staff.

If you have any questions, please do not hesitate to contact my office.

Very truly yours,

Murray Selman

cc: Ms. Marylee M. Slosson, Project Manager
Project Directorate I-1
Division of Reactor Projects - I/II
U.S. Nuclear Regulatory Commission
Washington, DC 20555

Mr. William Russell
Regional Administrator - Region I
U.S. Nuclear Regulatory Commission
631 Park Avenue
King of Prussia, PA 19406

Senior Resident Inspector
U.S. Nuclear Regulatory Commission
P.O. Box 38
Buchanan, NY 10511

8709150211 870903
PDR ADOCK 05000247
Q PDR

A047
1/1

ENCLOSURE I

Responses to Items J through O

of NRC's May 27, 1987

Request for Additional Information

on the IP-2 Second Ten-Year

ISI Program

Consolidated Edison Company of New York
Indian Point Unit No. 2
Docket No. 50-247
September 3, 1987

J. With regards to limitations due to metallurgical properties of cast stainless steel (SA351 Grade CF8A), the staff has continued to monitor the development of new or improved examination techniques. As improvements in these areas are achieved, the staff is requiring that these new techniques be made part of the ISI examination procedure. Discuss the ISI examination procedures for the ultrasonic examination of the Indian Point Unit 2 Primary Coolant System and, in particular, the improved examination techniques which may have been incorporated.

Response:

The Indian Point Unit 2 Primary Coolant System consists primarily of forged stainless steel pipe; however, each of the four primary loops contains one cast pump bowl and four statically cast stainless steel elbows. The pump bowl consists of cast welded segments and the elbows consist of split castings with two longitudinal weld joints.

The forged stainless piping facilitates inspection of welding using normal ASME code UT techniques which do not require special consideration or developments associated with cast piping. As identified in our first 10-year Inservice Inspection Program, the cast nature of the elbows has precluded ultrasonic examinations of the longitudinal welds and precluded inspections of the circumferential joints from the elbow side. The cast nature of the pump bowl also precludes examinations of the segment welds.

We also continue to support and monitor developments of new or improved examination techniques for cast stainless steel via direct support of EPRI, receipt and review of EPRI reports, contacts with vendors in the non-destructive examination field and participation on key industry committees such as ASME XI. We note that there have been several recent EPRI projects involving ultrasonic examinations of centrifugally cast stainless steel and an EPRI report was recently issued (July, 1987) which discusses tests on statically cast stainless elbows. This report (NP5329) discusses digital signal processing techniques that may point the way toward establishing a technology to meaningfully inspect such stainless castings in the future.

We will continue to evaluate progress towards this goal over the course of our Inservice Inspection Program

K. For each of the requests for relief, provide a description and justification of any changes expected in the overall level of plant safety by performing the proposed alternative examination in lieu of the examination required by Section XI. If it is not possible to perform alternate examinations, discuss the impact on the overall level of plant quality and safety.

Response:

Relief Request No. 1

There is no change anticipated in the overall level of plant safety by performing the proposed alternative examination in lieu of the examination required by Section XI. Our reasoning is that the alternative visual examinations conducted during a system in-service or functional test will, in combination with volumetric or surface examinations, provide sufficient assurance of the adequacy of repair or replacements comparable generally to the required visual examinations during system hydrostatic tests.

Additionally, the required examinations are simply deferred, not substituted for, for increased operational flexibility.

Relief Request No. 2

There are no changes anticipated in the overall level of plant safety by performing the proposed alternative examination. The plant was designed and constructed to Codes in effect in the late 1960's. These Codes did not fully provide for in-service inspection considerations such as inspection access, weld joint geometry or weld surface finish which was established in later Codes. The alternative examination techniques planned to be utilized for in-service examinations are the same techniques used since the start of plant operations and the same techniques approved by the NRC in 1986 for the ISI program used during the first inspection interval (see paragraph 2.2 Relief Request I, S. Varga to M. Selman dated August 28, 1986). No changes in the welds and adjacent pipe material have been noted. Additionally, the integrity of the piping involved has been generally demonstrated by satisfactory operation since the early 1970's. The overall level of plant safety will therefore be maintained consistent with the original plant design.

Relief Request 3

The relief request provides for datum type information to be included on inspection documentation in lieu of establishing datum points by marking components directly. Traceability of inspection results to particular components is therefore assured. Since there is no substitution of alternative examinations involved, the question regarding changes in plant safety is not applicable.

Relief Request 4

The provisions of ASME XI paragraph IWA-5244 provide various methods of satisfying visual examination (VT-4) requirements for inaccessible (buried) components other than by a visual (VT-4) examination. The Code in effect recognizes that, for inaccessible (buried) components, other test methods involving measurements or verification of flow changes, pressure drops, or flow rates are equally suitable in lieu of a visual examination.

This relief request simply identifies other cases due to high radiation fields, congested piping or closed piping tunnels where inaccessibility may exist. However, to date we have not been able to identify where the VT-4 examination could not be accomplished because of congested piping or closed piping to tunnels. Therefore, the relief request has been modified to delete these cases. (See Revision I to Relief Request 4 in Enclosure II to this letter.) The case of inaccessibility due to high radiation fields has been retained because of the potential for these conditions becoming more prevalent as plant operation continues.

The proposed tests in these cases are the same tests stipulated in the Code for the case of inaccessibility due to burial. Since alternatives to the Code-specified tests in this case are not being proposed, no change in the overall level of plant safety is anticipated due to the application of the relief request.

The reference to paragraph IWA-5244A being applied to redundant systems also does not involve changes to plant safety. It is merely a case of establishing guidelines where the Code did not cover the conditions of redundancy and isolatability.

Relief Request 5

Since the provisions of this relief request simply extend the Code specified time period for submittal of summary inspection reports to Enforcement and Regulatory agencies, the question regarding changes in plant safety is not applicable.

Relief Request 6

There are no changes expected in the overall level of plant safety by performing the proposed alternative examinations. The reactor vessel was designed and constructed to Codes in effect in the late 1960's. The Codes did not fully provide for in-service inspection access which was established in later Codes. The alternative examination techniques planned to be utilized for in-service examinations are the same techniques used since the start of plant operation and the same techniques approved by the NRC in 1983 for the ISI program used during the first inspection interval. (See letter S. Varga to J. O'Toole dated June 17, 1983.) Additionally, the continued integrity of the vessel has been demonstrated by satisfactory operation since the early 1970's. This is also supported by the general history of satisfactory vessel performance throughout the industry.

By performing the proposed alternative examinations, the overall level of plant safety will therefore be maintained consistent with the original plant design.

Relief Request 7

There are no changes expected in the overall level of plant safety by performing the proposed alternative examinations. The pressurizer and surrounding biological and missile shield was constructed in accordance with Codes and fabrication bases in effect in the late 1960's. These Codes and fabrication bases did not fully provide for in-service inspection access considerations of later Codes and bases. The alternative examination techniques planned to be utilized for in-service examinations are the same techniques used since the start of plant operation and the same techniques approved by the NRC for the ISI program used during the first inspection interval. (See letter S. Varga to J. O'Toole dated June 17, 1983). Additionally, the continued integrity of the pressurizer has been demonstrated by satisfactory operation since the early 1970's. Satisfactory performance has also been demonstrated by the general pressurizer history throughout the industry. The overall level of plant safety will therefore be maintained consistent with original plant design and fabrication Codes and bases.

Relief Request 8

There are no changes expected in the overall level of plant safety by performing the proposed alternative examinations. The regenerative heat exchanger was designed and fabricated in accordance with codes and fabrication bases in effect in the late 1960's. These Codes and fabrication bases did not provide for in-service inspection access considerations in areas where the function and design of the component resulted in localized high radiation areas. The alternative examination techniques planned to be utilized for in-service inspection examinations are the same techniques used since the start of plant operation and the same techniques approved by the NRC for the ISI program used during the first inspection interval. (See letter S. Varga to J. O'Toole dated June 17, 1983). Additionally, the continued integrity of the Regenerative Heat Exchanger has been demonstrated by satisfactory operation since the early 1970's. Therefore the overall level of plant safety will be maintained consistent with the original plant design.

Relief Request 9

There are no changes expected in the overall level of plant safety by performing the proposed alternative examinations. The pressurizer was designed and fabricated in accordance with Codes in effect in the late 1960's. These Codes did not fully provide for in-service inspection considerations such as surface finish and geometry to support examinations of nozzle inside radius sections. The alternative examination techniques planned to be utilized for in-service examinations

are the same techniques used since the start of plant operation. Additionally, the continued integrity of the pressurizer has been demonstrated by satisfactory plant operation since the early 1970's. Therefore, the overall level of plant safety will be maintained consistent with the original plant design.

Relief Request 10

There are no changes expected in the overall level of plant safety by performing the proposed alternative examinations. The steam generators were designed and fabricated in accordance with Codes in effect in the late 1960's. These codes did not fully provide for in-service inspection considerations such as surface condition and geometry necessary to support examinations of the inside radius section of nozzles. The alternative examination techniques planned to be utilized for in-service examinations are the same techniques used since the start of plant operation. Additionally, the continued integrity of the primary side of the steam generators has been demonstrated by satisfactory operation since the early 1970's. Therefore, the overall level of plant safety will be maintained consistent with the original plant design.

Relief Request 11

There are no changes expected in the overall level of plant safety by performing the proposed alternative examinations. The Codes and fabrication bases established in the 1960's did not fully provide for in-service inspection considerations such as access. In particular, access to the area of the outside of reactor vessel nozzles-to-safe-end welds is severely restricted by a combination of plugs in the primary shield, an extremely confined work area and non-removable insulation. The alternative examination techniques, planned to be utilized for in-service inspection examinations, are the same techniques used since the start of plant operation and the same techniques approved by the NRC for the ISI program used during the first inspection interval. (See letter S. Varga to J. O'Toole dated June 17, 1983). Additionally, the Indian Point Unit vessel nozzle-to-safe-end welds were weld overlayed on the outside and inside surfaces prior to initial operation, thereby adding increased assurance of long term weld integrity. The continued integrity of these welds has also been demonstrated by satisfactory operation since the early 1970's. Therefore, the overall level of plant safety will be maintained consistent with the original plant design.

Relief Request 12

There are no changes expected in the overall level of plant safety by performing the proposed alternative examinations. The Codes and fabrication bases established in the 1960's did not fully provide for inservice inspection consideration of weld crown contours, as cast geometry and surface finish, proximity of welds, thermal sleeves, rolled-in-clad, etc. These conditions restrict the extent of ultrasonic examination that can be performed on these nozzles. The

alternative examination techniques planned to be utilized for inservice examinations will consist of surface examinations and ultrasonic examinations to the maximum extent practical. These examinations will be consistent with the examinations performed since the start of plant operations and the same techniques approved by the NRC in 1983 for the ISI program used during the first inspection interval (see letter, S. Varga to J. O'Toole, dated June 17, 1983.) The continued integrity of the pressurizer and steam generators nozzle-to-safe-end welds has been demonstrated by satisfactory operation since the early 1970's Therefore, the overall level of plant safety will be maintained consistent with the original plant design bases.

Relief Request 13

There is no change anticipated in the overall level of plant safety by performing the proposed alternative examinations. The combination of visual examinations during system hydrostatic tests after each refueling, seat leakage tests at each refueling outage, stroke tests during cold shutdowns and evidence of satisfactory operation is sufficient to demonstrate continuing valve pressure boundary integrity without the need for valve disassembly. These examinations and tests are consistent with those initiated during start of plant operation in the early 1970's and later during implementation of ASME XI valve testing programs. Additionally, these alternative examinations and tests were approved by the NRC for the ISI Program used during the first inspection interval (see letter, S. Varga to M. Selman, dated August 28, 1986). The overall level of plant safety will, therefore, continue to be maintained, consistent with the original design and fabrication and early plant operational history.

Relief Request 14

Relief request withdrawn. See "L" below.

Relief Request 15

Relief request withdrawn. See "L" below.

Relief Request 16

There are no changes expected in the overall level of plant safety by performing the proposed alternative examinations. The Residual Heat Removal heat exchangers were constructed in accordance with Codes in effect in the late 1960's. These Codes and fabrication bases did not provide for inservice inspection access considerations in areas where the function and design of the components resulted in localized high radiation areas. The alternative examination techniques planned to be utilized for inservice inspection examinations are the same techniques used since the start of plant operation and the same techniques approved by the NRC for the ISI program used during the first inspection interval (see letter, S. Varga to J. O'Toole, dated June

17, 1983). Additionally, the continued integrity of the seal water heat return filter has been demonstrated by satisfactory operation since the early 1970's. The overall level of plant safety will, therefore, be maintained consistent with original plant design and fabrication bases.

Relief Request 17

There are no changes anticipated in the overall level of plant safety by performing the proposed alternative examination. The maximum pressure that the line segment between valve 867A and valves 866A and 866B is expected to see during plant operation is equivalent to pump discharge pressure, which is the test pressure for the alternate visual examination. Additionally, this line segment is examined at the weld location and adjacent base metal via liquid particle techniques in accordance with Section XI, IWC requirements. The combination of the above examinations and tests is sufficient to ensure continued integrity for this line segment. These examinations and tests are equivalent to those accomplished during the first ISI interval. Therefore, the overall level of plant safety will continue to be maintained consistent with the early operational history.

Relief Request 18

There is no change anticipated in the overall level of plant safety by performing the proposed alternative examinations. As discussed in the relief request, the extent of time required to conduct system hydrostatic tests and perform potential followup activities such as repair and retest could potentially impact temperatures in the Spent Fuel Pool. By performing the alternative examinations, the overall level of plant safety will be maintained by precluding such potential temperature increases.

Relief Request 19

There is no change anticipated in the overall level of plant safety by performing the proposed alternative examination. The alternate provisions specified in the relief request are simply clarification of the criteria to be used for testing class 3 system lines which take suction from a river. The Code does not address this particular case although various other cases are discussed in IWD-5223. The overall level of plant safety will therefore continue to be maintained.

Relief Request 20

There is no change anticipated in the overall level of plant safety by performing the required system hydrostatic tests either while the plant is in operation or shutdown. Adherence to Plant Technical Specification requirements which govern the plant operation criteria assures maintenance of overall level of plant safety.

In discussing the performance of hydrostatic tests, the Code limits the case to plant shutdowns only since testing of auxiliary systems during plant operation can increase operational flexibility while

plant safety is maintained via Technical Specification adherence. It is our belief that the Code intended to mean that system hydrostatic tests should be conducted while the particular system tested is not in operation. Limiting the performance of hydrostatic tests to only shutdowns is not overwhelmingly impractical; it is more a matter of unduly restricting the period of time during which testing could reasonably be done, thereby unnecessarily adding to work required during refueling shutdown periods.

Relief Request 21

This relief request is withdrawn since it is no longer necessary. Subsequent to the development of the request, an Accumulator Tank's Topping Pump has been added to the system. The Topping Pump discharge line serves also to permit hydrostatic testing of the line segments discussed in relief request 21.

Relief Request 22

There are no changes expected in the overall level of plant safety by performing the proposed alternative examinations. Testing the Diesel Generator Coolers to the Code specified 165 psig could potentially degrade the equipment. Testing the equipment to 142 psig is sufficient to demonstrate continuing integrity of the cooler, since normal operating pressure is only 60-80 psi. The level of plant safety will therefore continue to be maintained, since potential degradation of equipment will be precluded.

Relief Request 23

The questions regarding expected changes in the overall level of plant safety is discussed in answer to item P, submitted by letter dated July 17, 1987.

L. Relief Requests 2,4,8,11,12,14,15 and 16:

Provide an itemized list of the specific component(s) for which relief is requested and the number of items associated with the requested relief.

Response:

An individual reply to each part of this item follows:

Relief Request 2

SUMMARY OF ITEMS

IWB-2500	No. Items Covered by Relief Request 2
B 2.11	1
B 2.40	4
B 5.40	2
B 8.20	1
B 9.11	13
	21

IWC-2500	No. Items Covered by Relief Request 2
C 1.10	5
C 1.20	4
C 1.30	1
C 5.11	2
C 5.21	20
	32
TOTAL	53

INSERVICE INSPECTION PROGRAM
RELIEF REQUEST 2
PRIMARY SORT ON CODE 80-W81

NOTE	80-W81	IDENTITY		DESCRIPTION		DRAWING
R 2	C05.21	2	29	CW		B206658-3
R 2	C05.21	3	21	CW		B206660-3
R 2	C05.21	3	22	CW		B206660-3
R 2	C05.21	3	23	CW		B206660-3
R 2	C05.21	6	10	CW		B206664-3
R 2	C05.21	6	11	CW		B206664-3
R 2	C05.21	7	13	CW		B206665-2
R 2	C05.21	355	6	CW	Z	B206906-2
R 2	C05.21	355	7	CW	Z	B206906-2
R 2	C05.21	355	8	CW	Z	B206906-2
R 2	C05.21	361	26	CW		B206909-2
R 2	C05.21	361	27	CW		B206909-2
R 2	C05.21	361	47	CW	Z	B206910-3
R 2	C05.21	361	48	CW	Z	B206910-3
R 2	C05.21	361	50	CW	Z	B206910-3
R 2	C05.21	361	51	CW	Z	B206910-3
R 2	C05.21	361	57	CW	Z	B206910-3
R 2	C05.21	361	59	CW	Z	B206910-3

FILE: ISIPROZ REPORT C CON EDISON CMS RELEASE 4

INSERVICE INSPECTION PROGRAM
RELIEF REQUEST 2
PRIMARY SORT ON CODE 80-W81

NOTE	80-W81	IDENTITY	DESCRIPTION	DRAWING
R 2	B02.11	PZRC1	HD SHELL WELD	A206918-1
R 2	B02.40	SGC 21-8	TS-CH W	A206914-1
R 2	B02.40	SGC 22-8	TS-CH W	A206915-1
R 2	B02.40	SGC 23-8	TS-CH W	A206916-1
R 2	B02.40	SGC 24-8	TS-CH W	A206917
R 2	B05.40	PZRS2	SAF ND LN 70	A206918-1
R 2	B05.40	PZRS3	SAF ND LN342	A206918-1
R 2	B08.20	PZR IWS-A	W SKIRT	A206918-1
R 2	B09.11	10 4	CW	B206669-3
R 2	B09.11	10 4A	CW	B206669-3
R 2	B09.11	10 17	CW	B206669-3
R 2	B09.11	61 2	TE	B206708-2
R 2	B09.11	61 3	CW	B206708-2
R 2	B09.11	61 12	CW	B206708-2
R 2	B09.11	61 13	CW	B206708-2
R 2	B09.11	351 2	CW	B206903-2
R 2	B09.11	351 3	CW	B206903-2
R 2	B09.11	352 10	CW	B206904-2
R 2	B09.11	352 11	CW	B206904-2
R 2	B09.11	358 10	CW Z	B206908-2
R 2	B09.11	358 11	CW Z	B206908-2
R 2	C01.10	NRX C1	SHELL-FLANGE	A206921-1
R 2	C01.10	RCF C2	SHELL-FLG W	A206920
R 2	C01.10	SGC 21-3	CW	A206914-1
R 2	C01.10	SGC 21-4	CW	A206914-1
R 2	C01.10	SGC 21-6	CW	A206914-1
R 2	C01.20	NRX C2	HEAD-SHELL	A206921-1
R 2	C01.20	RCF C1	HD-FLG W	A206920
R 2	C01.20	RCF C3	SHELL-HD W	A206920
R 2	C01.20	SGC 21-1	CW HD-SHELL	A206914-1
R 2	C01.30	SGC 21-7	TS-SHELL W	A206914-1
R 2	C05.11	2 35	CW	B206658-3
R 2	C05.11	2 36	CW	B206658-3
R 2	C05.21	2 8	CW	B206657-2
R 2	C05.21	2 9	CW TE	B206657-2

Relief Request 4

The components for which relief is requested are the buried service water sections of header lines 408 and 409.

Relief Request 8

Relief Request 8 has been revised and is submitted at this time as Revision 1. This revision incorporates the inlet and outlet piping connections that are now included in the Relief Request.

SUMMARY OF ITEMS

IWB-2500	No. Items In Relief Request
B 2.51	6
B 2.61	6
B 3.150	12
B 3.160	12
B 9.21	12
Total	48

FILE: ISIPROZ REPORT C CON EDISON CMS RELEASE 4

INSERVICE INSPECTION PROGRAM
RELIEF REQUEST 8
PRIMARY SORT ON CODE 80-W81

NOTE	80-W81	IDENTITY		DESCRIPTION	DRAWING
R 8	B03.160	RGXN	3-4	IN RAD SECT	A206921-1
R 8	B09.21	19	2	CW TE	B206684-4
R 8	B09.21	27	2	TE	B206685-3
R 8	B09.21	79	25	CW	B206713-2
R 8	B09.21	80	24	TE	B206714-2
R 8	B09.21	RGXP	1-2	CW	A206921-1
R 8	B09.21	RGXP	1-3	CW	A206921-1
R 8	B09.21	RGXP	2-1	CW	A206921-1
R 8	B09.21	RGXP	2-2	CW	A206921-1
R 8	B09.21	RGXP	2-3	CW	A206921-1
R 8	B09.21	RGXP	2-4	CW	A206921-1
R 8	B09.21	RGXP	3-1	CW	A206921-1
R 8	B09.21	RGXP	3-2	CW	A206921-1

INSERVICE INSPECTION PROGRAM
RELIEF REQUEST 8
PRIMARY SORT ON CODE 80-W81

NOTE	80-W81	IDENTITY		DESCRIPTION	DRAWING
R 8	B02.51	RGXC	1-1	CW	A206921-1
R 8	B02.51	RGXC	1-4	CW	A206921-1
R 8	B02.51	RGXC	2-1	CW	A206921-1
R 8	B02.51	RGXC	2-4	CW	A206921-1
R 8	B02.51	RGXC	3-1	CW	A206921-1
R 8	B02.51	RGXC	3-4	CW	A206921-1
R 8	B02.61	RGXC	1-2	TUBE SHEET W	A206921-1
R 8	B02.61	RGXC	1-3	TUBE SHEET W	A206921-1
R 8	B02.61	RGXC	2-2	TUBE SHEET W	A206921-1
R 8	B02.61	RGXC	2-3	TUBE SHEET W	A206921-1
R 8	B02.61	RGXC	3-2	TUBE SHEET W	A206921-1
R 8	B02.61	RGXC	3-3	TUBE SHEET W	A206921-1
R 8	B03.150	RGXN	1-1	NOZZLE/SHELL	A206921-1
R 8	B03.150	RGXN	1-2	NOZZLE/SHELL	A206921-1
R 8	B03.150	RGXN	1-3	NOZZLE/SHELL	A206921-1
R 8	B03.150	RGXN	1-4	NOZZLE/SHELL	A206921-1
R 8	B03.150	RGXN	2-1	NOZZLE/SHELL	A206921-1
R 8	B03.150	RGXN	2-2	NOZZLE/SHELL	A206921-1
R 8	B03.150	RGXN	2-3	NOZZLE/SHELL	A206921-1
R 8	B03.150	RGXN	2-4	NOZZLE/SHELL	A206921-1
R 8	B03.150	RGXN	3-1	NOZZLE/SHELL	A206921-1
R 8	B03.150	RGXN	3-2	NOZZLE/SHELL	A206921-1
R 8	B03.150	RGXN	3-3	NOZZLE/SHELL	A206921-1
R 8	B03.150	RGXN	3-4	NOZZLE/SHELL	A206921-1
R 8	B03.160	RGXN	1-1	IN RAD SECT	A206921-1
R 8	B03.160	RGXN	1-2	IN RAD SECT	A206921-1
R 8	B03.160	RGXN	1-3	IN RAD SECT	A206921-1
R 8	B03.160	RGXN	1-4	IN RAD SECT	A206921-1
R 8	B03.160	RGXN	2-1	IN RAD SECT	A206921-1
R 8	B03.160	RGXN	2-2	IN RAD SECT	A206921-1
R 8	B03.160	RGXN	2-3	IN RAD SECT	A206921-1
R 8	B03.160	RGXN	2-4	IN RAD SECT	A206921-1
R 8	B03.160	RGXN	3-1	IN RAD SECT	A206921-1
R 8	B03.160	RGXN	3-2	IN RAD SECT	A206921-1
R 8	B03.160	RGXN	3-3	IN RAD SECT	A206921-1

Relief Request 11

SUMMARY OF ITEMS

IWB-2500	No. Items In Relief Request
B 5.10	8
Total	8

INSERVICE INSPECTION PROGRAM
RELIEF REQUEST 11
PRIMARY SORT ON CODE 80-W81

NOTE	80-W81	IDENTITY	DESCRIPTION	DRAWING
R11	B05.10	RPVS21-1A	SAFE END	A206913-1
R11	B05.10	RPVS21-14A	SAFE END	A206913-1
R11	B05.10	RPVS22-1A	SAFE END	A206913-1
R11	B05.10	RPVS22-14A	SAFE END	A206913-1
R11	B05.10	RPVS23-1A	SAFE END	A206913-1
R11	B05.10	RPVS23-14A	SAFE END	A206913-1
R11	B05.10	RPVS24-1A	SAFE END	A206913-1
R11	B05.10	RPVS24-14A	SAFE END	A206913-1

Relief Request 12

SUMMARY OF ITEMS

IWB-2500		No. Items In Relief Request
B 5.40		6
B 5.70		8
	Total	14

FILE: ISIPROZ REPORT C CON EDISON CMS RELEASE 4

INSERVICE INSPECTION PROGRAM
RELIEF REQUEST 12
PRIMARY SORT ON CODE 80-W81

NOTE	80-W81	IDENTITY	DESCRIPTION	DRAWING
R12	B05.40	PZRS1	SAF ND LN 61	A206918-1
R12	B05.40	PZRS4	SAF ND LN343	A206918-1
R12	B05.40	PZRS5	SAF ND LN344	A206918-1
R12	B05.40	PZRS6	SAF ND LN 63	A206918-1
R12	B05.70	SGS 21-4	SAFE END	A206914-1
R12	B05.70	SGS 21-5	SAFE END	A206914-1
R12	B05.70	SGS 22-4	SAFE END	A206915-1
R12	B05.70	SGS 22-5	SAFE END	A206915-1
R12	B05.70	SGS 23-4	SAFE END	A206916-1
R12	B05.70	SGS 23-5	SAFE END	A206916-1
R12	B05.70	SGS 24-4	SAFE END	A206917
R12	B05.70	SGS 24-5	SAFE END	A206917

Relief Request 14

Relief Request 14 is hereby withdrawn. This component is exempted by the requirements of IWC-1220(b). It was identified as such in our Ten Year Inservice Inspection submitted to the NRC dated September 30, 1985, Section 3.3 Exemptions.

Relief Request 15

Relief request 15 is hereby withdrawn. This component is exempted by the requirements of IWC-1220(b). It was identified as such in our Ten Year Inservice Inspection submitted to the NRC dated September 30, 1985, Section 3.3 Exemptions.

Relief Request 16

SUMMARY OF ITEMS

IWC-2500		No. Items In Relief Request
C 1.10		2
C 1.20		2
C 2.31		4
C 3.10		4
	Total	12

FILE: ISIPROZ REPORT C CON EDISON CMS RELEASE 4

INSERVICE INSPECTION PROGRAM
RELIEF REQUEST 16
PRIMARY SORT ON CODE 80-W81

NOTE	80-W81	IDENTITY	DESCRIPTION	DRAWING
R16	C01.10	RHX C21-1	SHELL-FLANGE	A206919
R16	C01.10	RHX C22-1	SHELL-FLANGE	A206919
R16	C01.20	RHX C21-2	SHELL-HEAD	A206919
R16	C01.20	RHX C22-2	SHELL-HEAD	A206919
R16	C02.31	RHX N21-1	NOZ SHELL	A206919
R16	C02.31	RHX N21-2	NOZ SHELL	A206919
R16	C02.31	RHX N22-1	NOZ SHELL	A206919
R16	C02.31	RHX N22-2	NOZ SHELL	A206919
R16	C03.10	RHX 21A	W	A206919
R16	C03.10	RHX 21B	W	A206919
R16	C03.10	RHX 22A	W	A206919
R16	C03.10	RHX 22B	W	A206919

M. Relief Requests 9 and 10:

Provide a detailed description or drawing which depicts the geometry and/or the inaccessibility which precludes the Code-required volumetric examination. Provide an estimate of the percentage of the Code-required examination that can be completed on the individual components requiring relief.

Response:

Westinghouse Drawing #681J281 shows the general assembly of the pressurizer and shows the inaccessibility (i.e., lack of internal structure) that is discussed in Relief Request 9. The spray nozzle (item 19) and restraining basket (Item 32) also prevent internal access.

Regarding Relief Request 10, Westinghouse Drawing #679J442 shows the details of the channel head. It is estimated that none of the required examination can be completed. These areas are included during the leak test at each refueling as well as the proposed alternate of visual examination for leakage during system hydrostatic test.

FILE: ISIPROZ REPORT C CON EDISON CMS RELEASE 4

INSERVICE INSPECTION PROGRAM
RELIEF REQUEST 9 AND 10
PRIMARY SORT ON CODE 80-W81

NOTE	80-W81	IDENTITY	DESCRIPTION	DRAWING
R 9	B03.120	PZRN1	IN RAD. SECT	A206918-1
R 9	B03.120	PZRN2	IN RAD. SECT	A206918-1
R 9	B03.120	PZRN3	IN RAD. SECT	A206918-1
R 9	B03.120	PZRN4	IN RAD. SECT	A206918-1
R 9	B03.120	PZRN5	IN RAD. SECT	A206918-1
R 9	B03.120	PZRN6	IN RAD. SECT	A206918-1
R10	B03.140	SGN 21-4	IN RAD. SECT	A206914-1
R10	B03.140	SGN 21-5	IN RAD. SECT	A206914-1
R10	B03.140	SGN 22-4	IN RAD. SECT	A206915-1
R10	B03.140	SGN 22-5	IN RAD. SECT	A206915-1
R10	B03.140	SGN 23-4	IN RAD. SECT	A206916-1
R10	B03.140	SGN 23-5	IN RAD. SECT	A206916-1
R10	B03.140	SGN 24-4	IN RAD. SECT	A206917
R10	B03.140	SGN 24-5	IN RAD. SECT	A206917

N. Relief Request 12:

Provide an estimate of the percentage of the Code-required examination that can be completed on the individual components requiring relief.

Response:

An evaluation of the requirements for ultrasonic inspection was conducted considering the various angles and directions from which these welds are required to be examined. Weighting factors were applied to examinations that were completed (1), Partial (.5), and not examined (0). The results of this tabulation indicate that approximately 42% of the volume of weld metal was examined.

O. Relief Request 20:

Justify the determination of impracticality for the performance of hydrostatic tests during shutdowns only.

Response:

This question is discussed in Item K above under Relief Request 20.

ENCLOSURE II

Relief Requests 4 and 8

Revision 1

Consolidated Edison Company of New York
Indian Point Unit No. 2
Docket No. 50-247
September 3, 1987

Relief Request 4

Revision 1

1. Components for Which Relief is Requested

   (a) Name: Buried components in redundant and isolable systems and components made inaccessible for examination due to high radiation fields.

   (b) Function: Service Water Lines 408 and 409.

   (c) ASME Section XI Code Class CVCS Resin Tanks

2. Reference Code Requirements That Have Been Determined to be Impractical

   Provisions of Section XI 80/w81 IWA-5240 regarding visual examinations.

3. Alternate Provisions

   The provisions of Section XI 80/w81 IWA-5244, regarding the examination of buried components, will be extended to cases where components are made inaccessible for inspection by virtue of high radiation fields. In addition, Paragraph IWA-5244(a), which is currently limited to non-redundant systems, shall apply to redundant systems.

4.. Basis for Requesting Relief and Alternate Provisions

   There are no provisions in the 80/w81 Code which allow for alternate examinations (i.e. - pressure test loss or change in flow test) in instances where visual examination is precluded by high radiation fields. In such cases the alternate examination provisions as specified in IWA-5244 will apply, thus clarifying the criteria for these cases.

   Paragraph IWA-5244(a), which applies to non-redundant systems, will also be applied to redundant systems. This is necessary because the provisions of IWA-5244 currently discuss only three potential cases of redundancy and isolability. A fourth case, redundancy and isolability, exists in some systems (i.e. - Service Water System). By applying the provisions of IWA-5244(a) to this case, all possible conditions of redundancy/isolability are covered.

RELIEF REQUEST 8

Revision 1

1. Components for Which Relief is Requested

(a) Name: Circumferential, Tubesheet-to-Shell, and Nozzle-to-Vessel Welds, and Nozzle Inside Radius Section
(b) Function: Regenerative Heat Exchanger (Tube and Shell Sides)
(c) ASME Section XI Code Class 1

2. Reference Code Requirements That Have Been Determined to be Impractical

Provisions of Section XI 80/w81 Table IWB-2500-1, Items B2.50, B2.51, B2.61, B3.150, B3.160 and B9.21 - Volumetric examinations of circumferential tubesheet-to-shell, and nozzle-to-vessel welds, and nozzle inside radius sections.

3. Alternate Examination

All component parts and welds associated with the Regenerative Heat Exchanger will be visually examined during hydrostatic testing per IWB-2500.

4. Basis for Requesting Relief and Alternate Examination

The total personnel exposure that would be involved in performing the inspections required by the Code, based on the measured values of 25-rem/hr. at the tube sheet end of the Heat Exchanger and 10-rem/hr. at the opposite end, is estimated at 1100 Rem. This estimate includes the time required for health physics surveys and monitoring, erecting and removing scaffolding, emplacing and removing shielding, removing and replacing insulation, performing the inspections, cleaning the welds, and general clean-up.[1]

No significant reduction in exposure rate is anticipated as a result of flushing or decay because the radioactive material is entrapped in crevices or deposits not amenable to flushing and has a long half-life. Because of the high fields, a modification is planned to install permanent shielding to permit work in the area. The permanent shielding will have leak collection lines that will support visual examinations for leakage from the Regenerative Heat Exchangers. The leak collection system will provide a positive method of ensuring that the Regenerative Heat Exchanger is operating safely.

(1) Refer to Con Ed's March, 1982 response to Question #4 of the NRC's February 22, 1982 letter concerning the Inservice Inspection Program (Docket 50-247).

USNRC-DS

1981 SEP 15 A 9:55

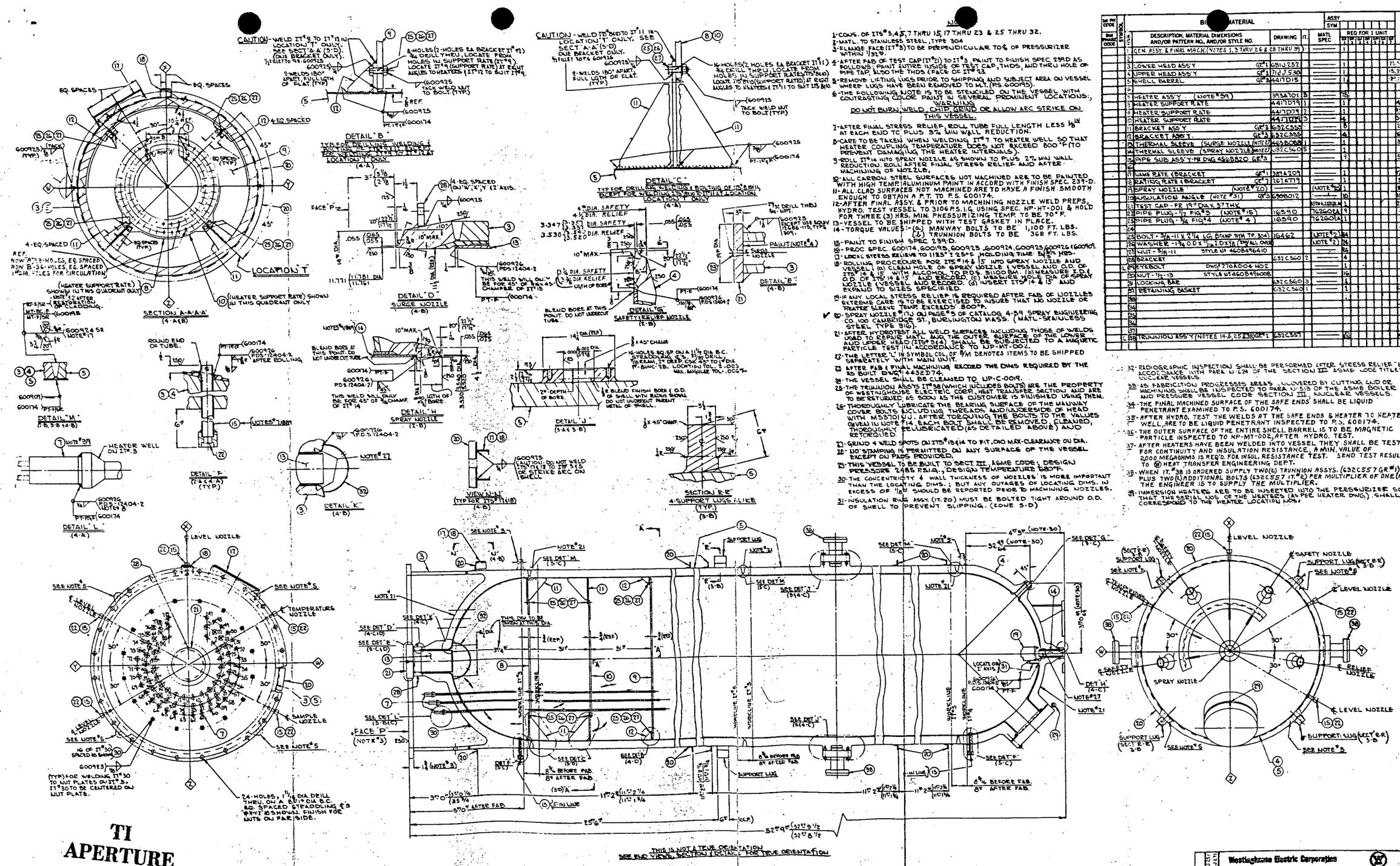

NOTES

1-CONS. OF IT#3,4,5,7 THRU 15, 17 THRU 23 & 25 THRU 32.
2-MATL. TO STAINLESS STEEL TYPE 304.
3-FLANGE FACE (IT#3) TO BE PERPENDICULAR TO℄ OF PRESSURIZER WITHIN 1/32".
4-AFTER FAB OF TEST CAP (IT#21) TO IT#3, PAINT TO FINISH SPEC 239D AS FOLLOWS: PAINT ENTIRE INSIDE OF TEST CAP, THDS, AND THRU HOLE OF PIPE TAP. ALSO THE THDS (FACE OF IT#3).
5-REMOVE LIFTING LUGS PRIOR TO SHIPPING AND SUBJECT AREA ON VESSEL WHERE LUGS HAVE BEEN REMOVED TO M.T. (PS.600095).
6-THE FOLLOWING NOTE IS TO BE STENCILED ON THE VESSEL WITH CONTRASTING COLOR PAINT IN SEVERAL PROMINENT LOCATIONS:

WARNING
DO NOT BURN, WELD, CHIP, GRIND OR ALLOW ARC STRIKE ON THIS VESSEL.

7-AFTER FINAL STRESS RELIEF, ROLL TUBE FULL LENGTH LESS 1/8" AT EACH END TO PLUS 3% MIN WALL REDUCTION.
8-CARE TO BE TAKEN WHEN WELDING IT#7 TO HEATER WELL SO THAT HEATER COUPLING TEMPERATURE DOES NOT EXCEED 800°F (TO PREVENT DAMAGING THE HEATER INTERNALS).
9-ROLL IT#4 INTO SPRAY NOZZLE AS SHOWN TO PLUS 2% MIN WALL REDUCTION. ROLL AFTER FINAL STRESS RELIEF AND AFTER MACHINING OF NOZZLE.
10-ALL CARBON STEEL SURFACES NOT MACHINED ARE TO BE PAINTED WITH HIGH TEMP. ALUMINUM PAINT IN ACCORD WITH FINISH SPEC. 239-D.
11-ALL CLAD SURFACES NOT MACHINED ARE TO HAVE A FINISH SMOOTH ENOUGH TO OBTAIN A P.T. TO P.S. 600174.
12-AFTER FINAL ASSY. & PRIOR TO MACHINING NOZZLE WELD PREPS, HYDRO. TEST VESSEL TO 3106 P.S.I.G. USING SPEC. NP-HT-001 & HOLD FOR THREE (3) HRS. MIN. PRESSURIZING TEMP. TO BE 70°F.
13-VESSEL TO BE SHIPPED WITH TEST GASKET IN PLACE.
14-TORQUE VALUES:- (a) MANWAY BOLTS TO BE 1,100 FT. LBS. (b) TRUNNION BOLTS TO BE 1,368 FT. LBS.
15-PAINT TO FINISH SPEC 239-D.
16-PROC SPEC. 600174, 600195, 600923, 600924, 600925, 600926 (600909).
17-LOCAL STRESS RELIEVE TO 1125°F ± 25°F HOLDING TIME 5 HRS. MIN.
18-ROLLING PROCEDURE FOR ITS #14 & 15 INTO SPRAY NOZZLE AND VESSEL: (a) CLEAN HOLE OF SPRAY NOZZLE (VESSEL AND O.D. OF ITS #14 & 15 WITH ALCOHOL TO P.D.S. 31100 BM. (b) MEASURE I.D. & O.D. OF ITS #14 & 15 AND RECORD. (c) MEASURE HOLE DIA OF SPRAY NOZZLE (VESSEL AND RECORD. (d) INSERT ITS #14 & 15 AND EXPAND TO SIZES SPECIFIED.
19-IF ANY LOCAL STRESS RELIEF IS REQUIRED AFTER FAB OF NOZZLES EXTREME CARE IS TO BE EXERCISED TO INSURE THAT NO NOZZLE OF HEATER SLEEVE TEMP. EXCEEDS 800°F.
20-SPRAY NOZZLE #7U ON PAGE #3 OF CATALOG 4-59 SPRAY ENGINEERING CO. 100 CAMBRIDGE ST., BURLINGTON MASS. (MATL-STAINLESS STEEL TYPE 316).
21-AFTER HYDROTEST ALL WELD SURFACES INCLUDING THOSE OF WELDS USED TO REPAIR MATL. AND THE OUTER SURFACE OF THE LOWER AND UPPER HEAD (ITS #3&4) SHALL BE SUBJECTED TO A MAGNETIC PARTICLE TEST IAW ACCORDANCE TO UP-MT-002.
22-THE LETTER "L" IN SYMBOL COL. OF B/M DENOTES ITEMS TO BE SHIPPED SEPARATELY WITH MAIN UNIT.
23-AFTER FAB & FINAL MACHINING RECORD THE DIMS REQUIRED BY THE AS BUILT DWG #4432D74.
24-THE VESSEL SHALL BE CLEANED TO UP-C-0019.
25-THE TRUNNION ASSYS IT#38 (WHICH INCLUDES BOLTS) ARE THE PROPERTY OF WESTINGHOUSE ELECTRIC CORP., HEAT TRANSFER SECTION AND ARE TO BE RETURNED, AS SOON AS THE CUSTOMER IS FINISHED USING THEM.
26-THOROUGHLY LUBRICATE THE BEARING SURFACE OF THE MANWAY COVER BOLTS INCLUDING THREADS AND UNDERSIDE OF HEAD WITH MS3101 U.J. AFTER TORQUING THE BOLTS TO THE VALUES GIVEN IN NOTE #14, EACH BOLT SHALL BE REMOVED, CLEANED, THOROUGHLY LUBRICATED (AS DETAILED ABOVE) AND RETORQUED.
27-GRIND 4 WELD SPOTS ON ITS #8&14 TO FIT .010 MAX-CLEARANCE ON DIA.
28-NO STAMPING IS PERMITTED ON ANY SURFACE OF THE VESSEL EXCEPT ON PADS PROVIDED.
29-THIS VESSEL TO BE BUILT TO SECT III, ASME CODE; DESIGN PRESSURE 2485 P.S.I.G., DESIGN TEMPERATURE 680°F.
30-THE CONCENTRICITY & WALL THICKNESS OF NOZZLES IS MORE IMPORTANT THAN THE LOCATING DIMS.; BUT ANY OUTAGES OF LOCATING DIMS. IN EXCESS OF 1/16" SHOULD BE REPORTED PRIOR TO MACHINING NOZZLES.
31-INSULATION RING ASSY. (IT.20) MUST BE BOLTED TIGHT AROUND O.D. OF SHELL TO PREVENT SLIPPING. (ZONE 5-D)

SEE PRI CODE	SYMBOL	BILL OF MATERIAL				ASSY SYM												UNIT WT
		DESCRIPTION, MATERIAL DIMENSIONS AND/OR PATTERN NO. AND/OR STYLE NO.		DRAWING	IT.	MATL SPEC	REQ FOR 1 UNIT											
							1ST											
	1	GEN. ASSY. & FINAL MACH. (NOTES 1, 3 THRU 26 & 28 THRU 31)																
	2																	
	3	LOWER HEAD ASS'Y	GP#1	6B1U252			1											25,500
	4	UPPER HEAD ASS'Y	GP#1	7142J530			1											15,355
	5	SHELL BARREL	GP#2	4441TD15			1											39,250
	6																	
	7	HEATER ASS'Y (NOTE #39)		3938A101	8		16											
	8	HEATER SUPPORT PLATE		4417D791	1		1											460
	9	HEATER SUPPORT PLATE		4417D792			1											325
	10	HEATER SUPPORT PLATE		4417D793	3		4											500
	11	BRACKET ASS'Y	GP#2	632C555			4											21.0
	12	BRACKET ASS'Y.	GP#3	632C555			4											6.0
	13	THERMAL SLEEVE (SURGE NOZZLE) (NOTE #7)		4468A088	1		1											31.0
	14	THERMAL SLEEVE (SPRAY NOZZLE) (NOTE #7)		632C5095			1											
	15	PIPE SUB ASS'Y-SEE DWG 456B8820	GP#3				3											5.5
	16																	
	17	LIFTING RATE (BRACKET	GP#1	3818A209			1											12.0
	18	LIFTING RATE (BRACKET	GP#1	2617A719			1											3.0
	19	SPRAY NOZZLE (NOTE #20)				(NOTE #20)	1											842
	20	INSULATION ANGLE (NOTE #31)	GP#3	6908012			10											1085
	21	TEST CAP - FR 19" DIA X 3" THK				ASM. 1120.2	1											250
	22	PIPE PLUG - 1/2 FIG #3 (NOTE #18)		16590		TG260B	4											
	23	PIPE PLUG - 3/4 FIG #4 (NOTE #4)		16590		TG260A	1											
	24																	
	25	BOLT - 3/8-11 X 2 1/4 LG. (STAND SYM. TP. 304)		16462		(NOTE #2)	24											
	26	WASHER - 1 3/4 O.D. X 1/16 I.D. X 1/8 (BOTH ALL OVER)				(NOTE #2)	24											
	27	NUT - 5/8-11 STYLE NO. 460B496410					24											
	28	BRACKET		632C560	2		1											
L	29	EYEBOLT	DWG.	270A004	HOZ		1											
	30	NUT - 1/2-13 STYLE NO. 460B496008					16											
	31	LOCKING BAR		632C560	3		4											
	32	RETAINING BASKET		632C560	1		1											
	33																	
	34																	
	35																	
	36																	
	37																	
L	38	TRUNNION ASS'Y (NOTES 14 & 25)	GP#1	632C557			4											4104

32-RADIOGRAPHIC INSPECTION SHALL BE PERFORMED AFTER STRESS RELIEF IN ACCORDANCE WITH PARA U-224 OF THE SECTION III ASME CODE TITLED NUCLEAR VESSELS.
33-AS FABRICATION PROGRESSES AREAS UNCOVERED BY CUTTING AND OR MACHINING SHALL BE INSPECTED TO PARA U-515 OF THE ASME BOILER AND PRESSURE VESSEL CODE SECTION III NUCLEAR VESSELS.
34-THE FINAL MACHINED SURFACE OF THE SAFE ENDS SHALL BE LIQUID PENETRANT EXAMINED TO P.S. 600174.
35-AFTER HYDRO. TEST THE WELDS AT THE SAFE ENDS & HEATER TO HEATER WELL, ARE TO BE LIQUID PENETRANT INSPECTED TO P.S. 600174.
36-THE OUTER SURFACE OF THE ENTIRE SHELL BARREL IS TO BE MAGNETIC PARTICLE INSPECTED TO NP-MT-002, AFTER HYDRO. TEST.
37-AFTER HEATERS HAVE BEEN WELDED INTO VESSEL THEY SHALL BE TESTED FOR CONTINUITY AND INSULATION RESISTANCE, A MIN. VALUE OF 2000 MEGAOHMS IS REQ'D. FOR INSUL. RESISTANCE TEST. SEND TEST RESULTS TO (9) HEAT TRANSFER ENGINEERING DEPT.
38-WHEN IT.#38 IS ORDERED SUPPLY TWO(2) TRUNNION ASSYS. (632C557 GR.#1) PLUS TWO(2) ADDITIONAL BOLTS (632C557 IT.#3) PER MULTIPLIER OF ONE(1). THE ENGINEER IS TO SUPPLY THE MULTIPLIER.
39-IMMERSION HEATERS ARE TO BE INSERTED INTO THE PRESSURIZER SO THAT THE SERIAL NOS. OF THE HEATERS (AS PER HEATER DWG.) SHALL CORRESPOND TO THE HEATER LOCATION NOS.

FIGURE 1-2 – Pressurizer General Assembly & Final Machining

8709150211-01

TI APERTURE CARD

Also Available On Aperture Card

TI APERTURE CARD

Also Available On Aperture Card

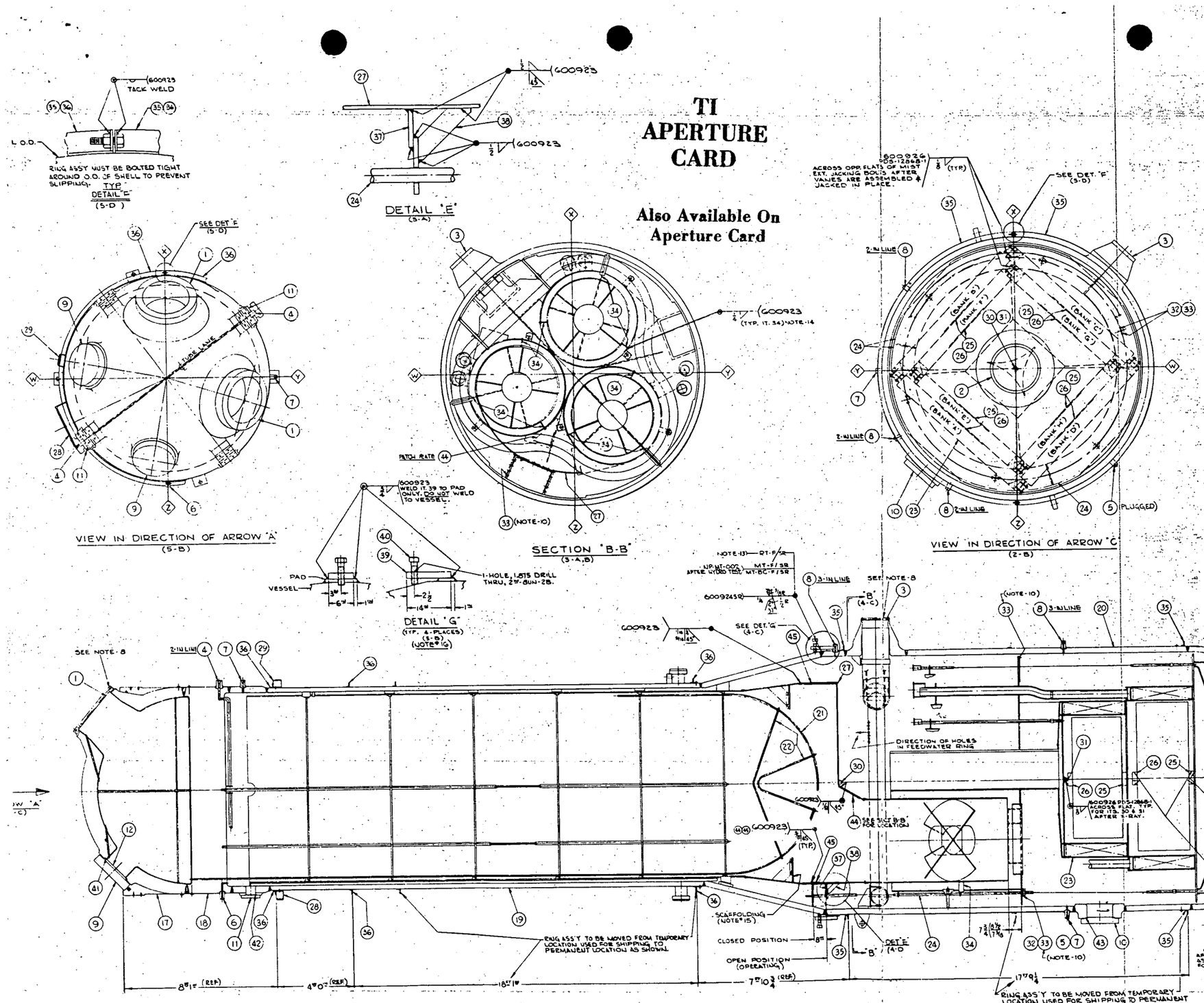

(16) NOT A TRUE ORIENTATION. FOR TRUE ORIENTATION SEE END VIEWS & SECTION

IT. NO.	TITLE		SIZE	DWG. NO.	IT. NO.	MATL. SPEC.	NO. REQ GR. 1	WT
1	PRIMARY NOZZLE (MAIN)	2	31.200 I.D.			STAINLESS STEEL	—	
2	STEAM OUTLET	1	28.250 I.D.			Mn. Mo. STEEL	—	
3	FEEDWATER INLET	1	16.625 I.D.			Mn. Mo. STEEL	—	
4	BOTTOM BLOWDOWN	2	2"			SA-105, GR. II	—	
5	STEAM DRUM - PRESSURE TAP	1	1" (PLUGGED)			SA-105, GR. II	—	
6	SHELL DRAIN	1	1"			SA-105, GR. II	—	
7	LONG RANGE LEVEL TAP	2	3/4"			SA-105, GR. II	—	
8	SHORT RANGE LEVEL TAP	6	3/4"			SA-105, GR. II	—	
9	MANWAY (PRIMARY)	2	16" I.D.			SA-302, GR. B	—	COVER 600C
10	MANWAY (SECONDARY)	1	16" I.D.			SA-516, GR. 70	—	BOLTS 600D
11	HANDHOLE (SECONDARY)	2	6" I.D.			SA-516, GR. 70	—	COVER 600E
12	INSERT (PRIMARY)	2	20 1/2 O.D.			SA-240, TYPE 304	—	
13							—	
14								
15								
16	FINAL FAB. ASSY. (NOTES #1 THRU 7, 8 THRU 17, 20 & 21)						1	
17	COOLANT CHANNEL			679J442		—	—	
18	TUBE R. & SHELL BARREL ASSY.			679J443		—	—	
19	LOWER SHELL			799D023		—	—	
20	UPPER SHELL ASSY.			679J451		—	—	
21	TUBE BUNDLE ASSY.			679J446		—	—	
22	ANTI-VIBRATION BARS					—	—	
23	MIST EXTRACTOR (PEERLESS DWG. 6B-543)					WT HEAVIST BUNDLE 75LBS	—	20 000
24	DOWNCOMER FLOW RESISTANCE R. ASSY.			4417D74		—	—	
25	TOP COVER PLATE (PEERLESS DWG. 6B-543, IT #13)					—	—	
26	BOTTOM COVER PLATE (PEERLESS DWG. 6B-543, IT #14)					—	—	
L 27	TRANSITION WRAPPER & SWIRL VANE ASSY.	GR. 1		679J444	-	—	1	61 21
L 28	NAMEPLATE & BRACKET	GR. 1		389A209	-	—	—	12
L 29	RATING PLATE & BRACKET	GR. 1		389A210		—	—	5
L 30	PLUG - 1"	FIG. 4		16590		4508	1	—
L 31	PLUG - 2"	FIG. 4		1659		4508	1	—
L 32	BOLT - HEX. HD. (.315 - .875)			27C388307		—	—	—
L 33	LOCKWIRE 1/16 DIA. .45 - 50 LG.			(NOTE-10)		QQ-W-390 (INCONEL)	1	—
L 34	SUPPORT BAR 6" OF 1/2 × 3" (BREAK SHARP CORNERS)					2812	9	—
35	INSULATION RING ASSY.	GR. 1		6508012	-	—	—	90
36	INSULATION RING ASSY.	GR. 2		6508012	-	—	—	70
L 37	BAR			4417D74	10	—	6	
L 38	BAR			4417D74	11	—	6	
L 39	ALIGNMENT BAR - FR. 14" × 8" × 2" THK.					ASTM-A-285, GR. C	4	
L 40	BOLT - HEX. HD. (2" × 7")			627C295056	-	—	4	
L 41	GASKET	(NOTE #20)		390A029	1	—	—	
L 42	GASKET	(NOTE #20)		390A029	2	—	—	
L 43	GASKET	(NOTE #20)		390A029	3	—	—	
L 44	PATCH PLATE			679J448	25	—	1	
L 45	PATCH PLATE ASS'Y			679J448	20	—	12	
L 46	PAINT	(NOTE #4)				PAINT SPEC. 239D	5 GAL.	

(1) - CONS. OF UPPER SHELL ASSY. IT. 20, TUBE BUNDLE ASSY. IT #21 AND IT. #27, 30, 33, 34, THRU 40, 44 & 45
(2) - PROC. SPEC. - 600195, 600923, 600924, 600926, 600923 & NAMT-002
(3) - STENCIL THE FOLLOWING NOTE ON THIS VESSEL IN SEVERAL PROMINENT LOCATIONS WITH A CONTRASTING COLOR PAINT.

WARNING
DO NOT BURN, WELD, CHIP, GRIND OR ALLOW ANY ARC STRIKES ON THIS VESSEL.

(4) PAINT IS TO BE SUPPLIED TO THE FIELD FOR TOUCHUP AFTER FIELD ASS'Y AND STRESS RELIEF. ALL AREAS THAT SHOW PAINT DETERIORATION SHOULD BE REPAINTED AT THAT TIME.

(5) - THE UPPER SHELL ASSY. MAY BE ROTATED TO ANY PREFERABLE POSITION ABOUT ITS VERTICAL AXIS IN THE FIELD, PRIOR TO FABRICATING THE UPPER SHELL TO THE LOWER SHELL. IF THE ORIENTATION OF THE UPPER SHELL IS CHG'D. FROM THAT SHOWN, THE WRAPPER TRANSITION SECT ASSY MUST ALSO BE CHG'D ACCORDINGLY.

(6) - FIELD HYDROTEST TO TABLE VALUES FOR 4 HOURS MIN.

	TEST PRESS	TEST TEMP.
PRIMARY SIDE	2500	70°F
SECONDARY SIDE	1350	70°F

HYDRO. WATER CHEMISTRY TO BE IN ACCORDANCE WITH TECHNICAL MANUAL

(7)

(8) - CLOSURE RINGS ON ITS. 1, 2 & 3 TO BE REMOVED BY CHIPPING RING TO WELD PREP. FILLET WELD. CARE SHOULD BE EXERCISED TO AVOID WELD PREP. DAMAGE. GRIND SMOOTH THE WELD PREP. IN THE REGION WHERE THE RING WAS REMOVED.

(9) - CAUTION; PRIOR TO PIPING UNIT REMOVE ALL PLUGS USED FOR CAPPING CONNS DURING SHIPMENT.

(10) - METHOD FOR LOCKING BOLTS WITH LOCKWIRE TO BE IN ACCORDANCE WITH DWG. 389A220, (LOCK IN GROUPS OF 2, 3 OR 4)

(11) - WESTINGHOUSE WILL SET THE DOWNCOMER FLOW RESISTANCE ASSY IT #24 TO THE OPEN POSITION BY REMOVING BOLTS (IT #37) AND ROTATING OVAL FLANGE IN THE FIELD AFTER THE CLOSURE JOINT IS MADE.

(12) - ALL EXTERNAL SURFACES OF THE CHANNEL, ALL PRESSURE BOUNDARY WELDS AND NOZ REPAIR WELDS MUST BE MT INSPECTED TO UP MT-002, AFTER HYDROTEST. NO WELDING IS PERMITTED AFTER HYDROTEST.

(13) - RADIOGRAPHIC TEST TO BE IN ACCORDANCE WITH THE ASME BOILER & PRESSURE VESSEL CODE, 'NUCLEAR VESSELS', SECTION III PARA N-624.

(14) - ITS. 34 ARE TO BE INSTALLED IN THE FIELD AFTER THE LOWER SHELL ASSY. IS WELDED TO THE UPPER SHELL ASSY.

(15) - THE SCAFFOLDING IS TO BE REMOVED AFTER THE FINAL CLOSURE JOINT IS MADE.

(16) - ITS #39 WILL BE REMOVED IN THE FIELD AFTER ASS'Y, AFTER ASSEMBLY OF THE UPPER AND LOWER SUB ASSEMBLIES.

(17) - THE LETTER 'L' TO THE LEFT OF THE ITEMS IN THE B/M INDICATE THOSE ITEMS THAT ARE SHIPPED TO THE CUSTOMER LOOSE.

(18)

(19)

(20) - ONE FLEXITALLIC GASKET PER ACCESS HOLE WILL BE INSTALLED PRIOR TO SHIPMENT. ONE SPECIAL SPARE GASKET PER ACCESS HOLE MUST BE SHIPPED SEPARATELY WITH THE GENERATOR.

(21) - ALL MANWAY AND HANDHOLE BOLTS MUST BE LUBRICATED WITH POS-MASTOLIN ONLY AND NO SUBSTITUTE SHOULD BE USED WITHOUT WESTINGHOUSE CONCURRENCE. FUTURE PROCUREMENT OF LUBE SHOULD BE REQUESTED ON SPARE PARTS ORDER TO WESTINGHOUSE. FOR BOLT TORQUE VALUES SEE TABLE IN ZONE B7-A. BOLT TORQUING AND LUBRICATION SHALL BE DONE IN ACCORDANCE WITH THE EQUIPMENT TECHNICAL MANUAL.

BOLT TORQUE VALUES		
TITLE	FT. LBS	LUBE
PRIMARY SIDE MANWAY	1100	POS-MASTOLIN
SECONDARY SIDE HANDHOLE	180	
SECONDARY SIDE MANWAY	360	

Westinghouse Electric Corporation

FRAME 44,430 SQ. FT. VERT. STM GEN.

TITLE GENERAL ASSEMBLY & FINAL FAB.

DRAWING NOT TO SCALE — SHEET NO. 1 OF 1 SHEETS

DFTM T.GIROUX — DESIGN APP — MATL & WELD APP — NECH ENG APP

CHKD J.G. — LO DFTMN — LO ENG

STEAM DIVISION, LESTER, PA. U.S.A.

679J441 — H.T.A.-01 — DEPT

IT PLUS CONS — DATE NOV. 8, 1966 — CTJ304

FIGURE 1-2 – General Assembly

870915021 1-02