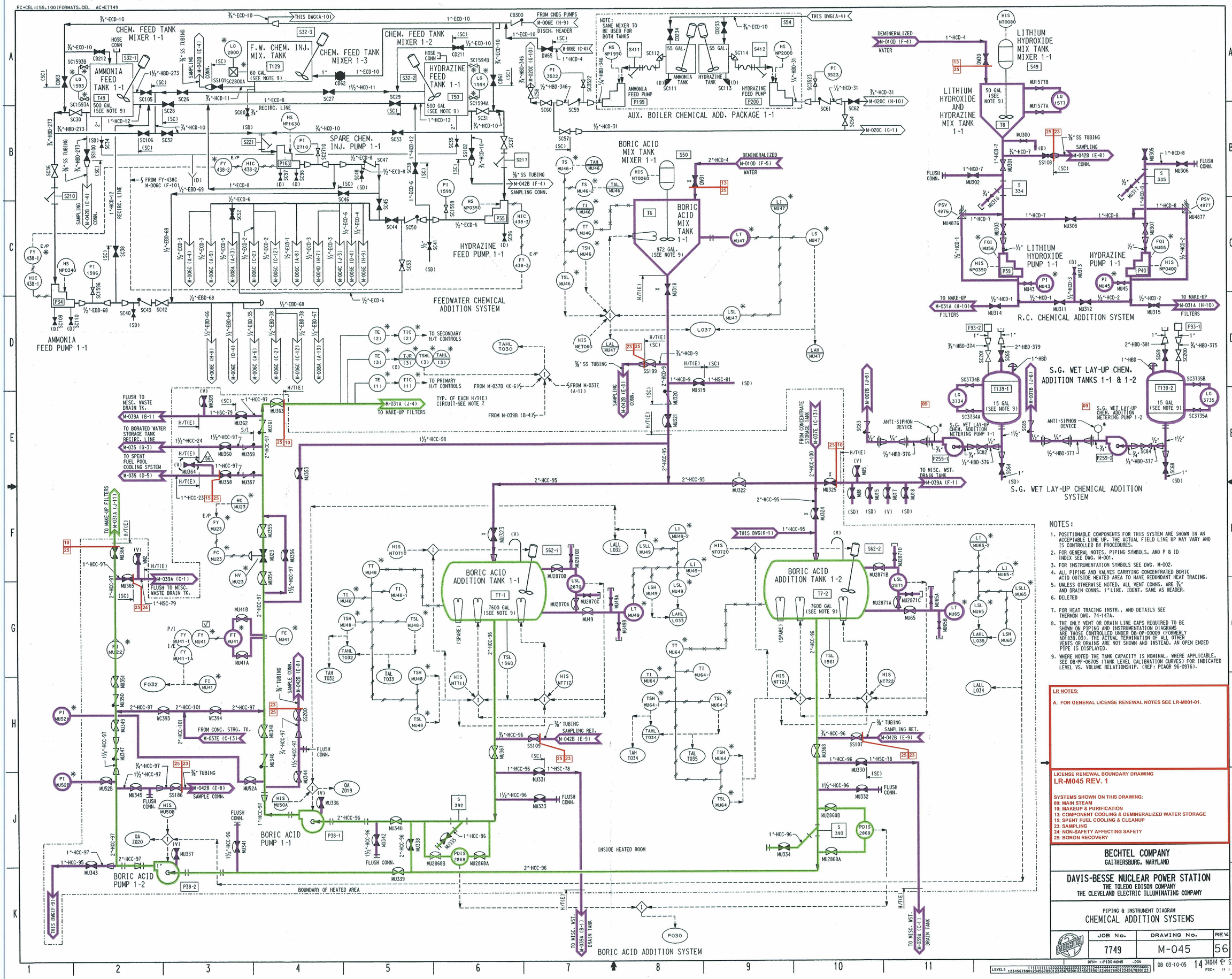

NOTES:

1. POSITIONABLE COMPONENTS FOR THIS SYSTEM ARE SHOWN IN AN ACCEPTABLE LINE UP. THE ACTUAL FIELD LINE UP MAY VARY AND IS CONTROLLED BY PROCEDURES.
2. FOR GENERAL NOTES, PIPING SYMBOLS, AND P & ID INDEX SEE DWG. M-001.
3. FOR INSTRUMENTATION SYMBOLS SEE DWG. M-002.
4. ALL PIPING AND VALVES CARRYING CONCENTRATED BORIC ACID OUTSIDE HEATED AREA TO HAVE REDUNDANT HEAT TRACING.
5. UNLESS OTHERWISE NOTED, ALL VENT CONNS. ARE ¾" AND DRAIN CONNS. 1"LINE. IDENT. SAME AS HEADER.
6. DELETED
7. FOR HEAT TRACING INSTR., AND DETAILS SEE THERMON DWG. 74-147A.
8. THE ONLY VENT OR DRAIN LINE CAPS REQUIRED TO BE SHOWN ON PIPING AND INSTRUMENTATION DIAGRAMS ARE THOSE CONTROLLED UNDER DB-OP-00009 (FORMERLY AD1839.05). THE ACTUAL TERMINATION OF ALL OTHER VENTS OR DRAINS ARE NOT SHOWN AND INSTEAD, AN OPEN ENDED PIPE IS DISPLAYED.
9. WHERE NOTED THE TANK CAPACITY IS NOMINAL. WHERE APPLICABLE, SEE DB-PF-06705 (TANK LEVEL CALIBRATION CURVES) FOR INDICATED LEVEL VS. VOLUME RELATIONSHIP. (REF: PCAQR 96-0976).

LR NOTES:

A. FOR GENERAL LICENSE RENEWAL NOTES SEE LR-M001-01.

LICENSE RENEWAL BOUNDARY DRAWING
LR-M045 REV. 1

SYSTEMS SHOWN ON THIS DRAWING:
09: MAIN STEAM
10: MAKEUP & PURIFICATION
13: COMPONENT COOLING & DEMINERALIZED WATER STORAGE
15: SPENT FUEL COOLING & CLEANUP
23: SAMPLING
24: NON-SAFETY AFFECTING SAFETY
25: BORON RECOVERY

BECHTEL COMPANY
GAITHERSBURG, MARYLAND

DAVIS-BESSE NUCLEAR POWER STATION
THE TOLEDO EDISON COMPANY
THE CLEVELAND ELECTRIC ILLUMINATING COMPANY

PIPING & INSTRUMENT DIAGRAM
CHEMICAL ADDITION SYSTEMS

JOB No.	DRAWING No.	REV.
7749	M-045	56

DB 03-10-05 14 34X44 "E" SIZE

D-76 01 D76