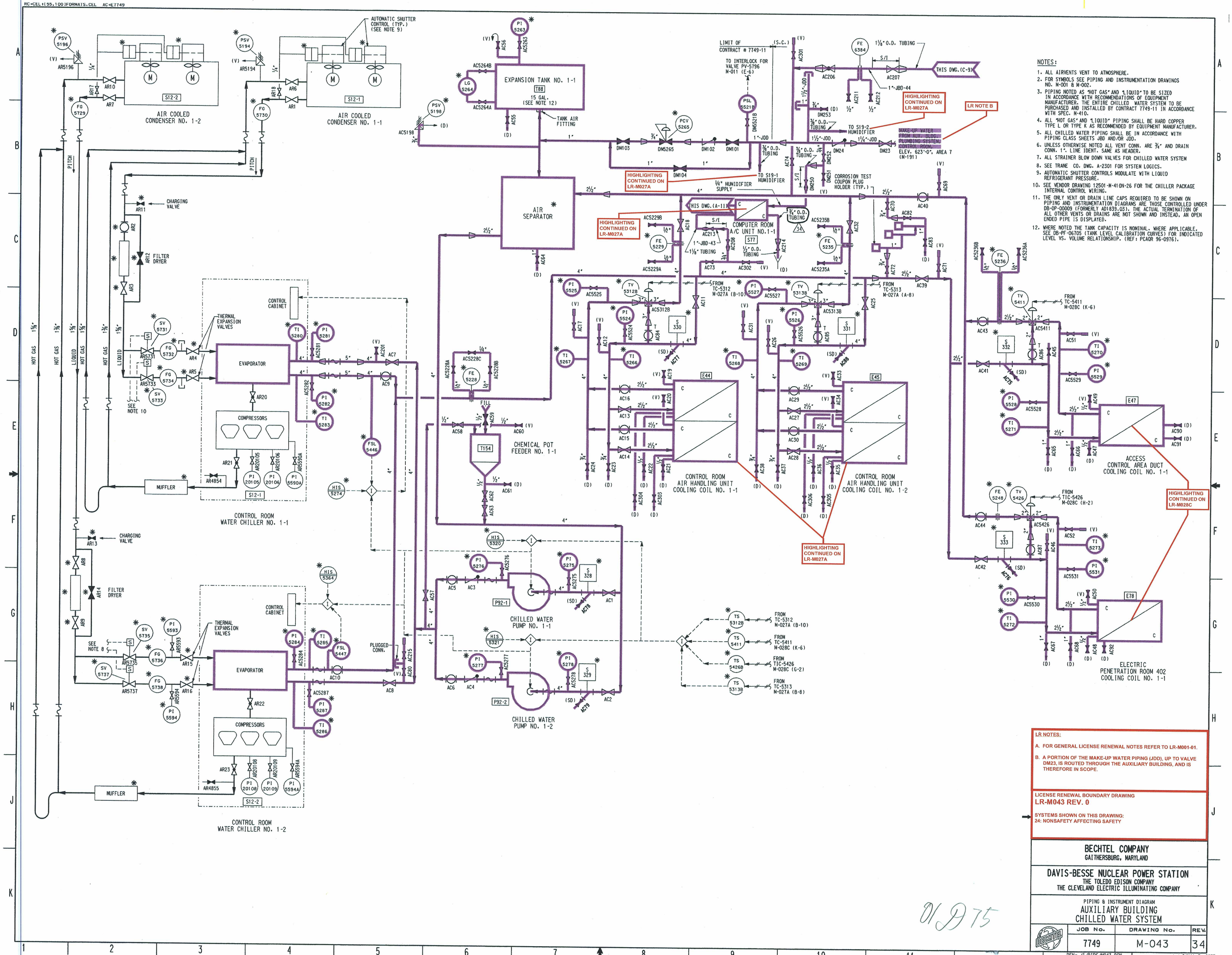

NOTES:

1. ALL AIRVENTS VENT TO ATMOSPHERE.
2. FOR SYMBOLS SEE PIPING AND INSTRUMENTATION DRAWINGS NO. M-001 & M-002.
3. PIPING NOTED AS "HOT GAS" AND "LIQUID" TO BE SIZED IN ACCORDANCE WITH RECOMMENDATIONS OF EQUIPMENT MANUFACTURER. THE ENTIRE CHILLED WATER SYSTEM TO BE PURCHASED AND INSTALLED BY CONTRACT 7749-11 IN ACCORDANCE WITH SPEC. M-410.
4. ALL "HOT GAS" AND "LIQUID" PIPING SHALL BE HARD COPPER TYPE L OR TYPE K AS RECOMMENDED BY EQUIPMENT MANUFACTURER.
5. ALL CHILLED WATER PIPING SHALL BE IN ACCORDANCE WITH PIPING CLASS SHEETS JBD AND/OR JDD.
6. UNLESS OTHERWISE NOTED ALL VENT CONN. ARE 3/4" AND DRAIN CONN. 1". LINE IDENT. SAME AS HEADER.
7. ALL STRAINER BLOW DOWN VALVES FOR CHILLED WATER SYSTEM
8. SEE TRANE CO. DWG. A-2301 FOR SYSTEM LOGICS.
9. AUTOMATIC SHUTTER CONTROLS MODULATE WITH LIQUID REFRIGERANT PRESSURE.
10. SEE VENDOR DRAWING 12501-M-410N-26 FOR THE CHILLER PACKAGE INTERNAL CONTROL WIRING.
11. THE ONLY VENT OR DRAIN LINE CAPS REQUIRED TO BE SHOWN ON PIPING AND INSTRUMENTATION DIAGRAMS ARE THOSE CONTROLLED UNDER DB-OP-00009 (FORMERLY AD1839.03). THE ACTUAL TERMINATION OF ALL OTHER VENTS OR DRAINS ARE NOT SHOWN AND INSTEAD, AN OPEN ENDED PIPE IS DISPLAYED.
12. WHERE NOTED THE TANK CAPACITY IS NOMINAL. WHERE APPLICABLE, SEE DB-PF-06705 (TANK LEVEL CALIBRATION CURVES) FOR INDICATED LEVEL VS. VOLUME RELATIONSHIP. (REF: PCAQR 96-0976).

LR NOTES:

A. FOR GENERAL LICENSE RENEWAL NOTES REFER TO LR-M001-01.

B. A PORTION OF THE MAKE-UP WATER PIPING (JDD), UP TO VALVE DM23, IS ROUTED THROUGH THE AUXILIARY BUILDING, AND IS THEREFORE IN SCOPE.

LICENSE RENEWAL BOUNDARY DRAWING
LR-M043 REV. 0

SYSTEMS SHOWN ON THIS DRAWING:
24: NONSAFETY AFFECTING SAFETY

BECHTEL COMPANY
GAITHERSBURG, MARYLAND

DAVIS-BESSE NUCLEAR POWER STATION
THE TOLEDO EDISON COMPANY
THE CLEVELAND ELECTRIC ILLUMINATING COMPANY

PIPING & INSTRUMENT DIAGRAM
AUXILIARY BUILDING
CHILLED WATER SYSTEM

JOB No.	DRAWING No.	REV.
7749	M-043	34

01 D 75

DFN= /I/PIDS/M043.DGN
DB 11-06-08 14 34X44 "E" SIZE