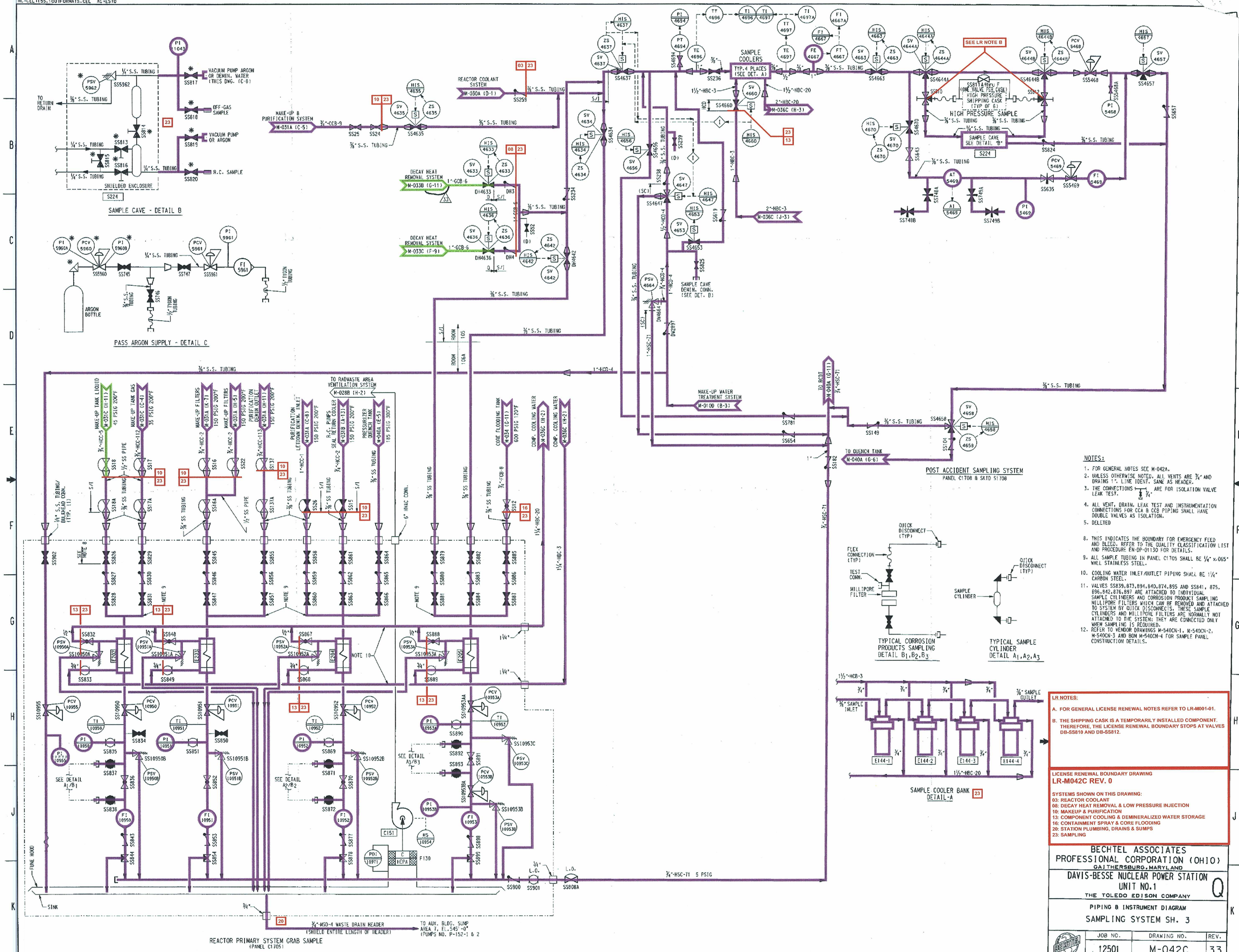

NOTES:

1. FOR GENERAL NOTES SEE M-042A.
2. UNLESS OTHERWISE NOTED, ALL VENTS ARE ¾" AND DRAINS 1". LINE IDENT. SAME AS HEADER.
3. THE CONNECTIONS ARE FOR ISOLATION VALVE LEAK TEST.
4. ALL VENT, DRAIN, LEAK TEST AND INSTRUMENTATION CONNECTIONS FOR CCA & CCB PIPING SHALL HAVE DOUBLE VALVES AS ISOLATION.
5. DELETED
8. THIS INDICATES THE BOUNDARY FOR EMERGENCY FEED AND BLEED. REFER TO THE QUALITY CLASSIFICATION LIST AND PROCEDURE EN-DP-01130 FOR DETAILS.
9. ALL SAMPLE TUBING IN PANEL C1705 SHALL BE ¼" x .065" WALL STAINLESS STEEL.
10. COOLING WATER INLET/OUTLET PIPING SHALL BE 1¼" CARBON STEEL.
11. VALVES SS839,873,894,840,874,895 AND SS841, 875, 896,842,876,897 ARE ATTACHED TO INDIVIDUAL SAMPLE CYLINDERS AND CORROSION PRODUCT SAMPLING MILLIPORE FILTERS WHICH CAN BE REMOVED AND ATTACHED TO SYSTEM BY QUICK DISCONNECTS. THESE SAMPLE CYLINDERS AND MILLIPORE FILTERS ARE NORMALLY NOT ATTACHED TO THE SYSTEM; THEY ARE CONNECTED ONLY WHEN SAMPLING IS REQUIRED.
12. REFER TO VENDOR DRAWINGS M-540CN-1, M-540CN-2, M-540CN-3 AND BOM M-540CN-4 FOR SAMPLE PANEL CONSTRUCTION DETAILS.

LR NOTES:

A. FOR GENERAL LICENSE RENEWAL NOTES REFER TO LR-M001-01.

B. THE SHIPPING CASK IS A TEMPORARILY INSTALLED COMPONENT. THEREFORE, THE LICENSE RENEWAL BOUNDARY STOPS AT VALVES DB-SS810 AND DB-SS812.

LICENSE RENEWAL BOUNDARY DRAWING
LR-M042C REV. 0

SYSTEMS SHOWN ON THIS DRAWING:
03: REACTOR COOLANT
08: DECAY HEAT REMOVAL & LOW PRESSURE INJECTION
10: MAKEUP & PURIFICATION
13: COMPONENT COOLING & DEMINERALIZED WATER STORAGE
16: CONTAINMENT SPRAY & CORE FLOODING
20: STATION PLUMBING, DRAINS & SUMPS
23: SAMPLING

BECHTEL ASSOCIATES PROFESSIONAL CORPORATION (OHIO)
GAITHERSBURG, MARYLAND

DAVIS-BESSE NUCLEAR POWER STATION UNIT NO.1 Q
THE TOLEDO EDISON COMPANY

PIPING & INSTRUMENT DIAGRAM
SAMPLING SYSTEM SH. 3

JOB NO.	DRAWING NO.	REV.
12501	M-042C	33

DB 09-10-03 14 34X44 "E" SIZE

D-74

01D 74