RC=CEL:[55,100]FORMATS.CEL AC=ESTD

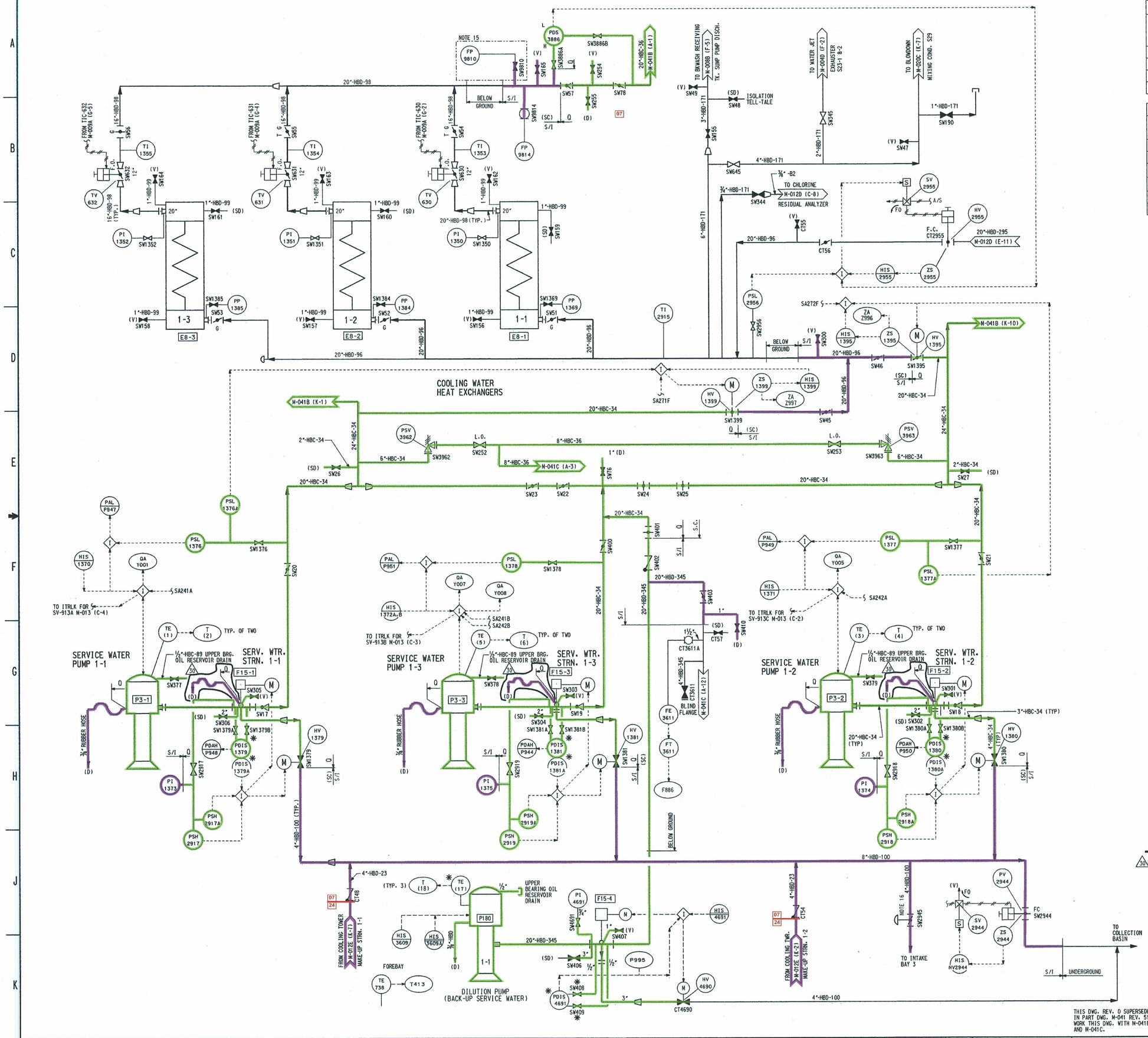

SERVICE WATER PUMPS						
LOCATION	1-1		1-2		1-3	
	TE (1)	T (2)	TE (3)	T (4)	TE (5)	T (6)
MOTOR UPPER BRG.	1477A	922	1478A	926	1479A	930
(THRUST BRG.)						
MOTOR STATOR	1477D	921	1478D	925	1479D	929

DILUTION PUMP		
LOCATION	1-1	
	TE (17)	T (18)
MOTOR STATOR	3612A	T974
MOTOR BEARING OT.	3612B	T975
MOTOR BEARING OT. (PUMP END)	3612C	T976
PUMP BEARING OT. (MOTOR END)		
PUMP BEARING OT.		
THRUST BEARING		

NOTES:

1. SYSTEM FUNCTIONS SHOWN ARE FOR NORMAL OPERATION UNDER FULL LOAD.
2. FOR GENERAL NOTES, PIPING SYMBOLS AND P & ID INDEX SEE DWG. M-001.
3. FOR INSTRUMENTATION SYMBOLS SEE DWG. M-002.
4. DELETED
5. UNLESS OTHERWISE NOTED, ALL DRAIN CONN. ARE 1" AND ALL VENT CONN. ¾". LINE IDENT. SAME AS HEADER.
6. OWNER PIPING TO BE ENGINEERED BY BECHTEL AND SUPPLIED BY GRINNELL.
7. DELETED
8. FOR VLV'S REFERENCING THIS NOTE, ONLY THE LOCAL HANDWHEELS & LOCAL PUSHBUTTON STATIONS OF THESE MOV'S ARE LOCKED. OPERATION FROM THE MAIN CONTROL ROOM IS NOT LOCKED.
9. THE INSTRUMENT IS SEISMICALLY SUPPORTED BUT MAY NOT BE FUNCTIONAL FOLLOWING A SEISMIC EVENT.
10. THE ONLY VENT OR DRAIN LINE CAPS REQUIRED TO BE SHOWN ON PIPING AND INSTRUMENTATION DIAGRAMS ARE THOSE CONTROLLED UNDER DB-OP-00009 (FORMERLY A01839.03). THE ACTUAL TERMINATION OF ALL OTHER VENTS OR DRAINS ARE NOT SHOWN AND INSTEAD, AN OPEN ENDED PIPE IS DISPLAYED.
11. REMOVAL OF THIS SPOOL PIECE REQUIRES INSTALLATION OF A TEMPORARY SPOOL PIECE IN ORDER TO MAINTAIN THE SEISMIC INTEGRITY OF THE SERVICE WATER SYSTEM. REFER TO HL-241D DETAIL 2 FOR TEMPORARY SPOOL PIECE INSTALLATION DETAILS.
12. REMOVAL OF THIS SPOOL PIECE REQUIRES INSTALLATION OF A TEMPORARY SPOOL PIECE IN ORDER TO MAINTAIN THE SEISMIC INTEGRITY OF THE SERVICE WATER SYSTEM. REFER TO HL-241E DETAIL 3 FOR TEMPORARY SPOOL PIECE INSTALLATION DETAILS.
13. ORIFICE PLATES IN FE9808 AND FE9809 ARE INTERCHANGEABLE.
14. DELETED
15. FP9810/SW9810 ARE ABANDONED IN PLACE. THE ANNUBAR IS UNABLE TO BE INSERTED (IT APPEARS THAT THE ISOLATION VALVE IS BROKEN). FP9814/SW9814 REPLACES THE ABANDONED COMPONENTS.
16. TO ADDRESS SINGLE ACTIVE FAILURE CONCERNS, THE AIR SUPPLY HAS BEEN DISCONNECTED FROM SW2945 AND THE VALVE SHALL REMAIN IN ITS FAILED OPEN POSITION. (REF. ECR 03-0097-00)

LR NOTES:

A. FOR GENERAL LICENSE RENEWAL NOTES REFER TO LR-M001-01.

LICENSE RENEWAL BOUNDARY DRAWING
LR-M041A REV. 0

SYSTEMS SHOWN ON THIS DRAWING:
07: SERVICE WATER
24: NONSAFETY AFFECTING SAFETY

BECHTEL ASSOCIATES PROFESSIONAL CORPORATION (OHIO)
GAITHERSBURG, MARYLAND

DAVIS-BESSE NUCLEAR POWER STATION UNIT NO.1
THE TOLEDO EDISON COMPANY

PIPING & INSTRUMENT DIAGRAM
SERVICE WATER PUMPS AND SECONDARY SERVICE WATER SYSTEM

JOB NO.	DRAWING NO.	REV.
12501	M-041A	30

THIS DWG. REV. 0 SUPERSEDES IN PART DWG. M-041 REV. 51. WORK THIS DWG. WITH M-041B AND M-041C.

DFN=I:/PIDS/M041A.DGN DB 08-28-07 14 34X44 "E" SIZE PSC= 1:1

D-70 01/D70