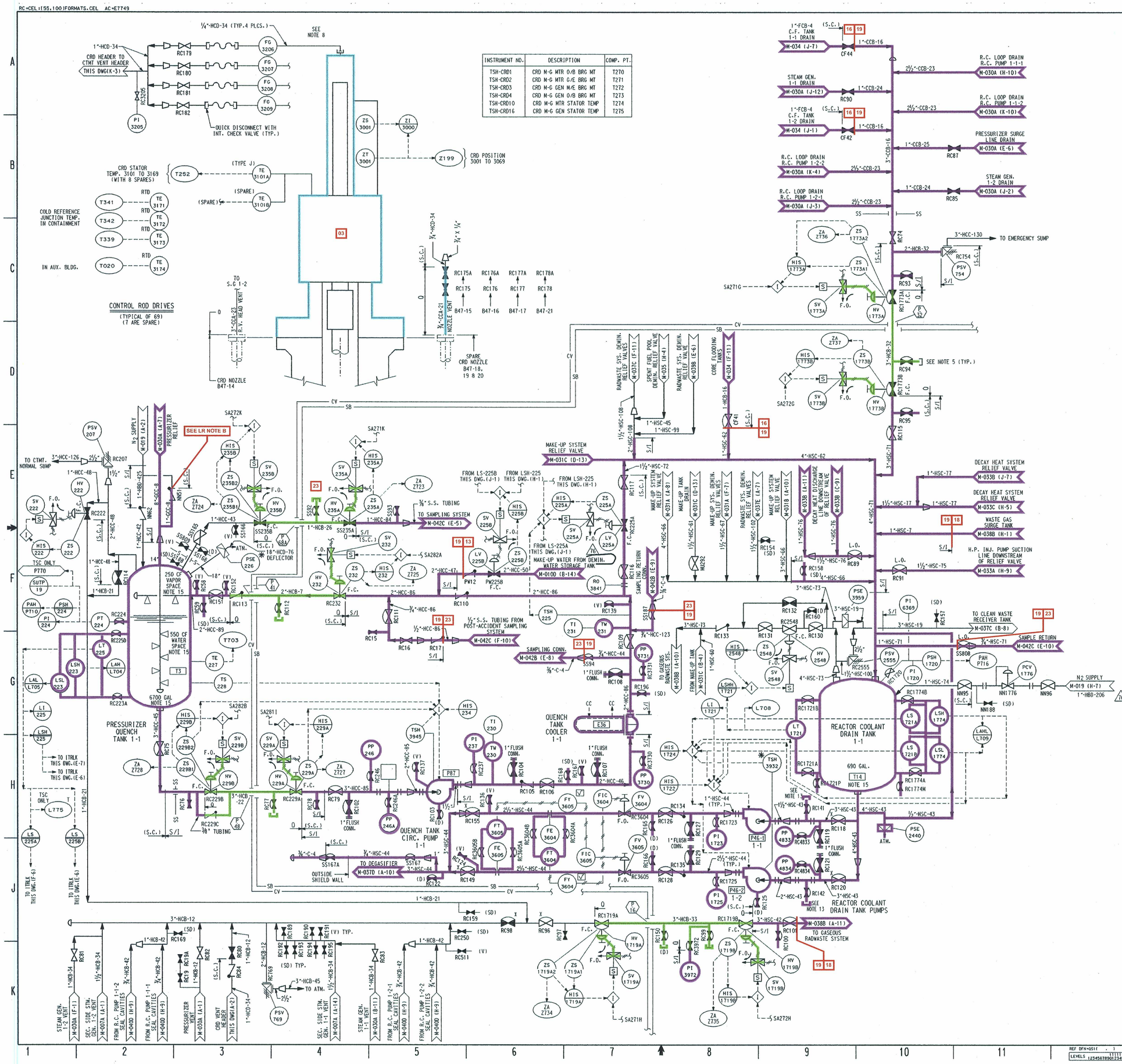

INSTRUMENT NO.	DESCRIPTION	COMP. PT.
TSH-CRD1	CRD M-G MTR O/B BRG MT	T270
TSH-CRD2	CRD M-G MTR G/E BRG MT	T271
TSH-CRD3	CRD M-G GEN M/E BRG MT	T272
TSH-CRD4	CRD M-G GEN O/B BRG MT	T273
TSH-CRD10	CRD M-G MTR STATOR TEMP	T274
TSH-CRD16	CRD M-G GEN STATOR TEMP	T275

NOTES:

1. FOR GENERAL NOTES, PIPING SYMBOLS AND P&ID INDEX, SEE DRAWING M-001.
2. FOR INSTRUMENTATION SYMBOLS SEE DRAWING M-002.
3. FOR COMPLETE REACTOR COOLANT SYSTEM P & ID SEE DRAWING M-030A & M-030B.
4. SYSTEM FUNCTIONS SHOWN ARE FOR NORMAL OPERATION UNDER FULL LOAD.
5. THE CONNECTIONS ¾" ARE FOR ISOLATION VALVES LEAK TEST.
6. DELETED
7. UNLESS OTHERWISE NOTED ALL VENT CONNECTIONS ARE ¾" AND DRAIN CONNECTIONS 1". LINE IDENT. SAME AS HEADER.
8. FOUR (4) VENTING ASSEMBLIES AVAILABLE TO SERVE 61 CONTROL ROD DRIVES.
9. OWNER PIPING TO BE ENGINEERED BY BECHTEL AND SUPPLIED BY GRINNELL.
10. DELETED
11. ALL VENT AND DRAIN LINES SHALL HAVE DOUBLE VALVING FOR PIPING CLASS 600 POUNDS AND HIGHER.
12. TUBING SHALL BE ⅜" O.D. X 0.065" SEAMLESS STAINLESS STEEL SA-213 GR 304.
13. TEMPORARY START-UP STRAINER REMOVED. SPOOL PIECE WITH VALVE ADDED.
14. THE ONLY VENT OR DRAIN LINE CAPS REQUIRED TO BE SHOWN ON PIPING AND INSTRUMENTATION DIAGRAMS ARE THOSE CONTROLLED UNDER DB-OP-00009 (FORMERLY AD1839.03). THE ACTUAL TERMINATION OF ALL OTHER VENTS OR DRAINS ARE NOT SHOWN AND INSTEAD, AN OPEN ENDED PIPE IS DISPLAYED.
15. WHERE NOTED, THE TANK CAPACITY IS NOMINAL. WHERE APPLICABLE, SEE DB-PF-06705 (TANK LEVEL CALIBRATION CURVES) FOR INDICATED LEVEL VS. VOLUME RELATIONSHIP. (REF. PCAQR 96-0976)
16. SOME VALVES NUMBERED WITH A "PW" DESIGNATION (i.e. PW32) ARE BEING USED TO SUPPLY DEMINERALIZED WATER. REFERENCE MOD 95-0050.

LR NOTES:

A. FOR GENERAL LICENSE RENEWAL NOTES REFER TO LR-M001-01.

B. THIS LINE IS GAS FILLED AND IS NOT IN SCOPE FOR LEAKAGE OR SPRAY CONSIDERATIONS.

LICENSE RENEWAL BOUNDARY DRAWING
LR-M040A REV. 1

SYSTEMS SHOWN ON THIS DRAWING:
03: REACTOR COOLANT
13: COMPONENT COOLING & DEMINERALIZED WATER
16: CONTAINMENT SPRAY & CORE FLOODING
18: GASEOUS WASTE
19: REACTOR COOLANT VENT & DRAIN
23: SAMPLING

BECHTEL COMPANY
GAITHERSBURG, MARYLAND

DAVIS-BESSE NUCLEAR POWER STATION
THE TOLEDO EDISON COMPANY
THE CLEVELAND ELECTRIC ILLUMINATING COMPANY

Q

PIPING & INSTRUMENT DIAGRAM
REACTOR COOLANT SYSTEM DETAILS

JOB No.	DRAWING No.	REV.
7749	M-040A	76

DB 07-02-07 14 34X44 "E" SIZE

D-68

01 D-62