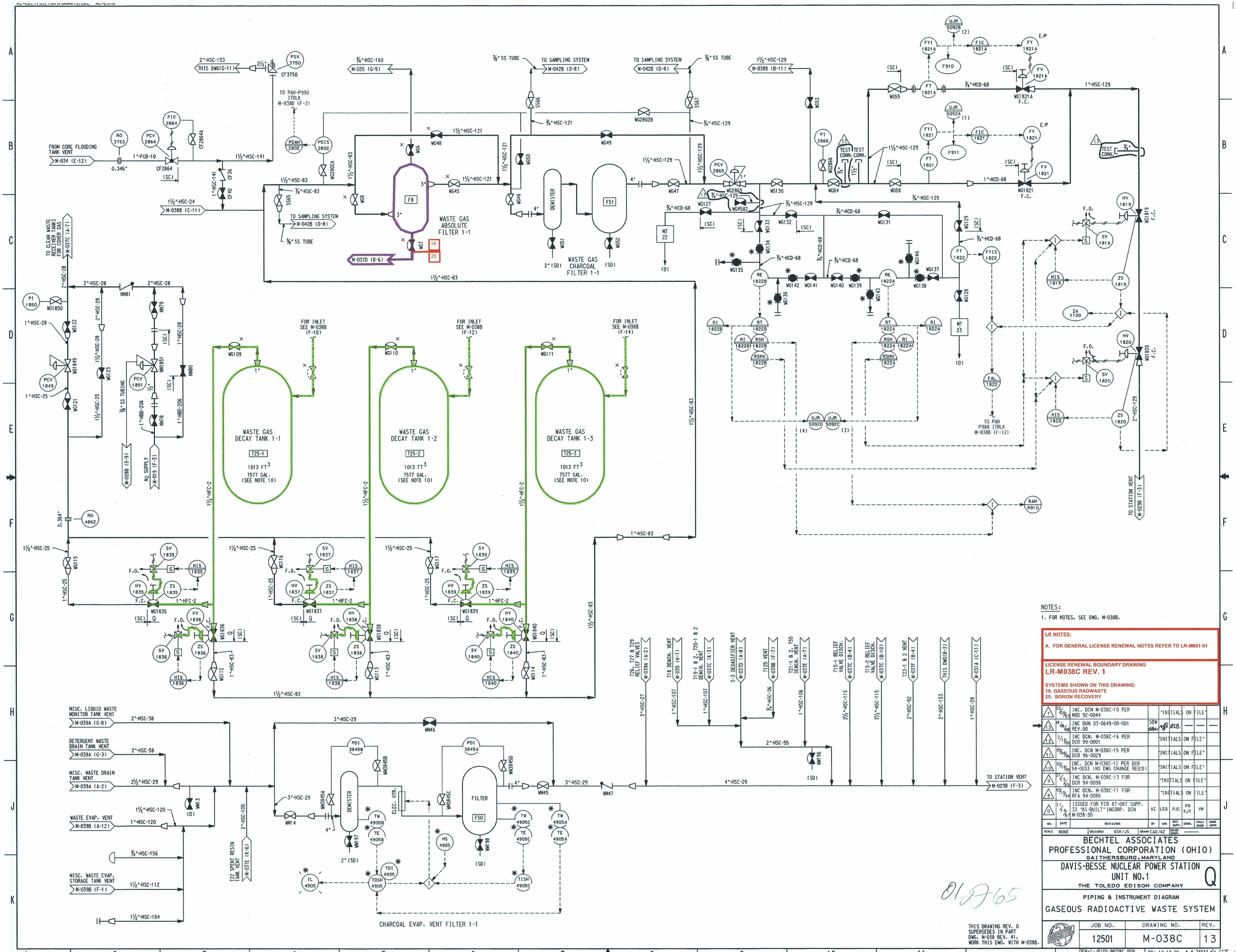

NOTES:

1. FOR NOTES, SEE DWG. M-038B.

LR NOTES:

A. FOR GENERAL LICENSE RENEWAL NOTES REFER TO LR-M001-01

LICENSE RENEWAL BOUNDARY DRAWING
LR-M038C REV. 1

SYSTEMS SHOWN ON THIS DRAWING:
18: GASEOUS RADWASTE
25: BORON RECOVERY

NO.	DATE	REVISIONS	BY	CHK	DES SUPV.	ENGR.	PROJ ENGR	OWNR APPR
7	D2 08/93	INC. DCN M-038C-10 PER MOD 92-0044		"INITIALS ON FILE"				
13	12/10/08	INC DUN 03-0649-00-001 REV.00	SBW					
12	2/11/00	INC DCN. M-038C-16 PER DCR 99-0001		"INITIALS ON FILE"				
11	09/04/96	INC. DCN M-038C-15 PER DCR 96-0029		"INITIALS ON FILE"				
10	02/11/95	INC. DCN M-038C-12 PER DCR 94-0033 (NO DWG CHANGE REQ'D)		"INITIALS ON FILE"				
9	D1 4/3/95	INC DCN. M-038C-13 FOR DCR 94-0098		"INITIALS ON FILE"				
8	03/15/94	INC DCN. M-038C-11 FOR RFA 94-0086		"INITIALS ON FILE"				
0	11/14/87	ISSUED FOR FCR 87-087 SUPP. 33 "AS-BUILT" INCORP. DCN M-038-30	AZ	LEB	PJC	PN KJY	VM	

SCALE NONE | DESIGNED ASH/JS | DRAWN CAD/AZ | CHIEF ENGR. ——

BECHTEL ASSOCIATES PROFESSIONAL CORPORATION (OHIO)
GAITHERSBURG, MARYLAND

DAVIS-BESSE NUCLEAR POWER STATION
UNIT NO.1
THE TOLEDO EDISON COMPANY

Q

PIPING & INSTRUMENT DIAGRAM
GASEOUS RADIOACTIVE WASTE SYSTEM

JOB NO.	DRAWING NO.	REV.
12501	M-038C	13

THIS DRAWING REV. 0 SUPERSEDES IN PART DWG. M-038 REV. 41. WORK THIS DWG. WITH M-038B.

01-A-65

DFN=I:/PIDS/M038C.DGN | DB: 12-18-08 | 14 | 34X44 "E" SIZE