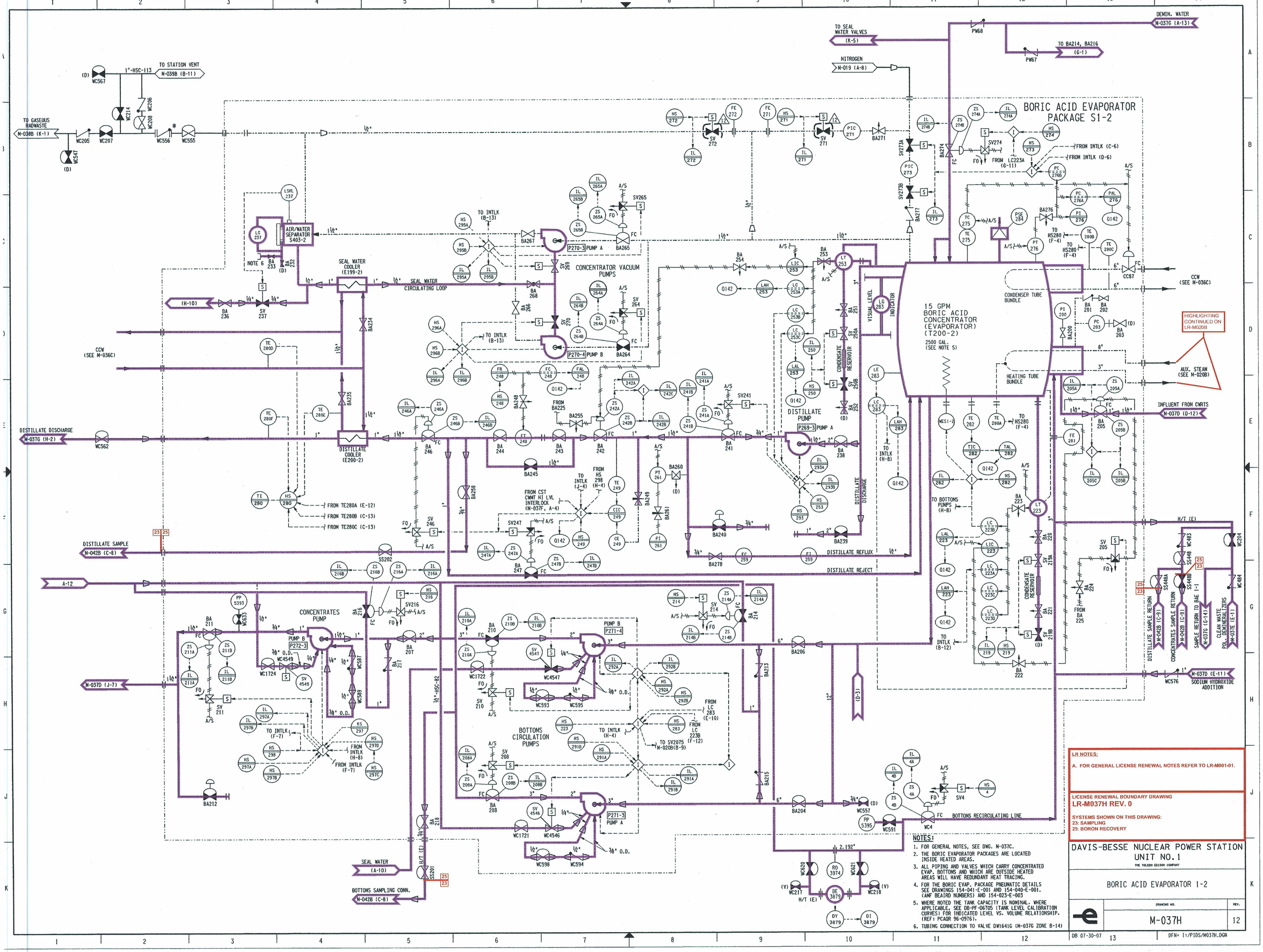

LR NOTES:

A. FOR GENERAL LICENSE RENEWAL NOTES REFER TO LR-M001-01.

LICENSE RENEWAL BOUNDARY DRAWING
LR-M037H REV. 0

SYSTEMS SHOWN ON THIS DRAWING:
23: SAMPLING
25: BORON RECOVERY

NOTES:

1. FOR GENERAL NOTES, SEE DWG. M-037C.
2. THE BORIC EVAPORATOR PACKAGES ARE LOCATED INSIDE HEATED AREAS.
3. ALL PIPING AND VALVES WHICH CARRY CONCENTRATED EVAP. BOTTOMS AND WHICH ARE OUTSIDE HEATED AREAS WILL HAVE REDUNDANT HEAT TRACING.
4. FOR THE BORIC EVAP. PACKAGE PNEUMATIC DETAILS SEE DRAWINGS 154-041-E-001 AND 154-040-E-001. (ANF BEAIRD NUMBERS) AND 154-023-E-003
5. WHERE NOTED THE TANK CAPACITY IS NOMINAL. WHERE APPLICABLE, SEE DB-PF-06705 (TANK LEVEL CALIBRATION CURVES) FOR INDICATED LEVEL VS. VOLUME RELATIONSHIP. (REF: PCAQR 96-0976).
6. TUBING CONNECTION TO VALVE DW1641G (M-037G ZONE B-14)

DAVIS-BESSE NUCLEAR POWER STATION
UNIT NO. 1
THE TOLEDO EDISON COMPANY

BORIC ACID EVAPORATOR I-2

DRAWING NO.	REV.
M-037H	12

DB 07-30-07 13 DFN= I:/PIDS/M037H.DGN

D-62

01 D62