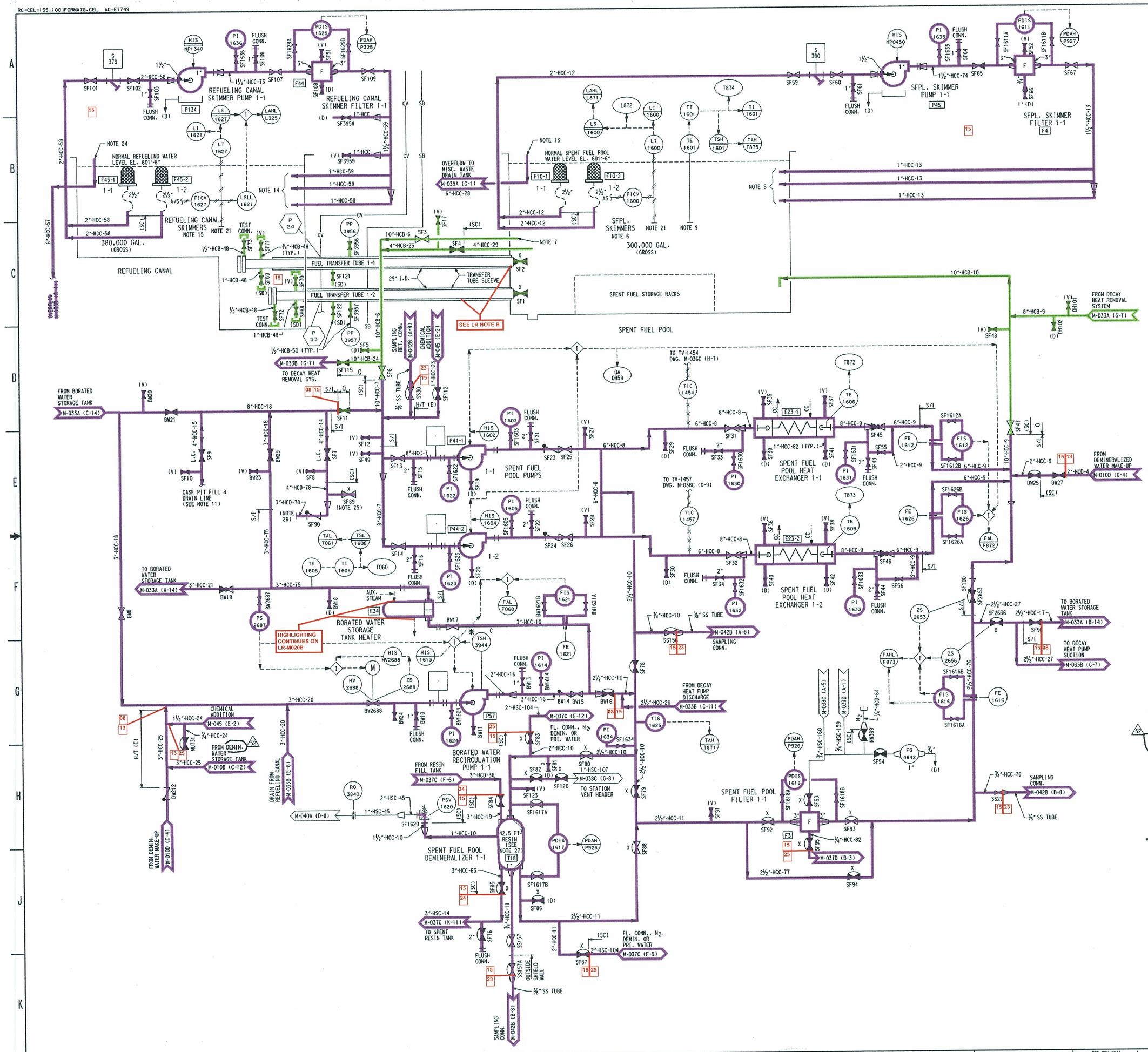

NOTES:

1. FOR GENERAL NOTES, PIPING SYMBOLS, AND P&ID INDEX SEE DRAWING M-001.
2. FOR INSTRUMENTATION SYMBOLS SEE DRAWING M-002.
3. SYSTEM FUNCTIONS SHOWN ARE FOR NORMAL OPERATION UNDER FULL LOAD.
4. DELETED
5. RETURN LINES TO SPENT FUEL POOL FROM THE SKIMMER PUMP ARE EVENLY SPACED ACROSS THE SOUTH END OF THE POOL.
6. THE SPENT FUEL POOL SKIMMERS ARE LOCATED AT THE NORTH END OF THE POOL.
7. PENETRATE POOL WALL LOWER THAN 3 FEET BELOW NORMAL WATER LEVEL AND HIGHER THAN 9 FEET ABOVE THE SPENT FUEL ASSEMBLIES.
8. DELETED
9. TERMINATE INSTRUMENT PIPING 5 FEET BELOW NORMAL WATER LEVEL.
10. ANY PIPES PENETRATING POOL AND CANAL MUST BE LOCATED HIGHER THAN 9'-0" ABOVE SPENT FUEL ASSEMBLIES.
11. THE CASK PIT DRAIN ENDS AT ELEV. 590'-0", WHERE IT PENETRATES THE PIT.
12. ALL DRAINS, UNLESS OTHERWISE NOTED ON DIAGRAM, TO BE LOCALLY PIPED TO THE NEAREST EQUIPMENT DRAIN.
13. OVERFLOW PIPE TO PENETRATE WALL AT ELEVATION 600'-3" AND TURN UP SO OVERFLOW OPENING IS AT ELEVATION 601'-9".
14. RETURN LINES TO REFUELING CANAL FROM THE SKIMMER PUMP ARE EVENLY SPACED ACROSS THE SOUTH END OF THE CANAL.
15. THE REFUELING CANAL SKIMMERS ARE LOCATED AT THE NORTH END OF THE CANAL.
16. DELETED
17. CAPACITY OF FUEL TRANSFER PIT=143,250 GAL. (GROSS) CAPACITY OF CASK PIT=67,400 GAL. (GROSS).
18. THE REFUELING CANAL WATER VOLUME DOWN TO REACTOR VESSEL FLANGE IS 304,000 GALLONS (REFUELING CANAL VOLUME LESS LOWER CANAL VOLUME)
19. DELETED
20. UNLESS OTHERWISE NOTED, ALL DRAIN CONN. ARE 1" AND ALL VENT CONN. ¾" LINE IDENT. SAME AS HEADER.
21. TERMINATE TUBING AT ELEVATION 578'-0" WHICH IS THE TOP OF THE REACTOR BOTTOM FLANGE FOR CONNECTING TO THE HEAD.
22. DELETED.
23. THE ONLY VENT OR DRAIN LINE CAPS REQUIRED TO BE SHOWN ON PIPING AND INSTRUMENTATION DIAGRAMS ARE THOSE CONTROLLED UNDER DB-OP-00009 (FORMERLY AD1839.031). THE ACTUAL TERMINATION OF ALL OTHER VENTS OR DRAINS ARE NOT SHOWN AND INSTEAD, AN OPEN ENDED PIPE IS DISPLAYED.
24. OVERFLOW PIPE TO PENETRATE WALL AT ELEVATION 600'-6" AND TURN UP SO OVERFLOW OPENING IS AT ELEVATION 602'-0".
25. FLOOR STAND VALVE HANDWHEEL HAS BEEN REMOVED TO ALLOW CLEARANCE FOR FUEL HANDLING BRIDGE MOVEMENT.
26. CONNECTION FOR TEMPORARY PUMP OR HOSE.
27. WHERE NOTED THE TANK CAPACITY IS NOMINAL. WHERE APPLICABLE, SEE DB-PF-06705 (TANK LEVEL CALIBRATION CURVES) FOR INDICATED LEVEL VS. VOLUME RELATIONSHIP. (REF: PCAQR 96-0976).
28. SOME VALVES NUMBERED WITH A "PW" DESIGNATION (i.e. PW32) ARE BEING USED TO SUPPLY DEMINERALIZED WATER. REFERENCE MOD 95-0050.

LR NOTES:

A. FOR GENERAL LICENSE RENEWAL NOTES REFER TO LR-M001-01.

B. FUEL TRANSFER TUBES AND FLANGES ARE EVALUATED AS STRUCTURAL COMPONENTS.

LICENSE RENEWAL BOUNDARY DRAWING
LR-M035 REV. 0

SYSTEMS SHOWN ON THIS DRAWING:
08: DECAY HEAT REMOVAL & LOW PRESSURE INJECTION
13: COMPONENT COOLING & DEMINERALIZED WATER STORAGE
15: SPENT FUEL POOL COOLING & CLEANUP
23: SAMPLING
24: NONSAFETY AFFECTING SAFETY
25: BORON RECOVERY

BECHTEL COMPANY
GAITHERSBURG, MARYLAND

DAVIS-BESSE NUCLEAR POWER STATION
THE TOLEDO EDISON COMPANY
THE CLEVELAND ELECTRIC ILLUMINATING COMPANY

PIPING AND INSTRUMENT DIAGRAM
SPENT FUEL POOL COOLING SYSTEM

JOB No.	DRAWING No.	REV.
7749	M-035	52

D-53

01 D3