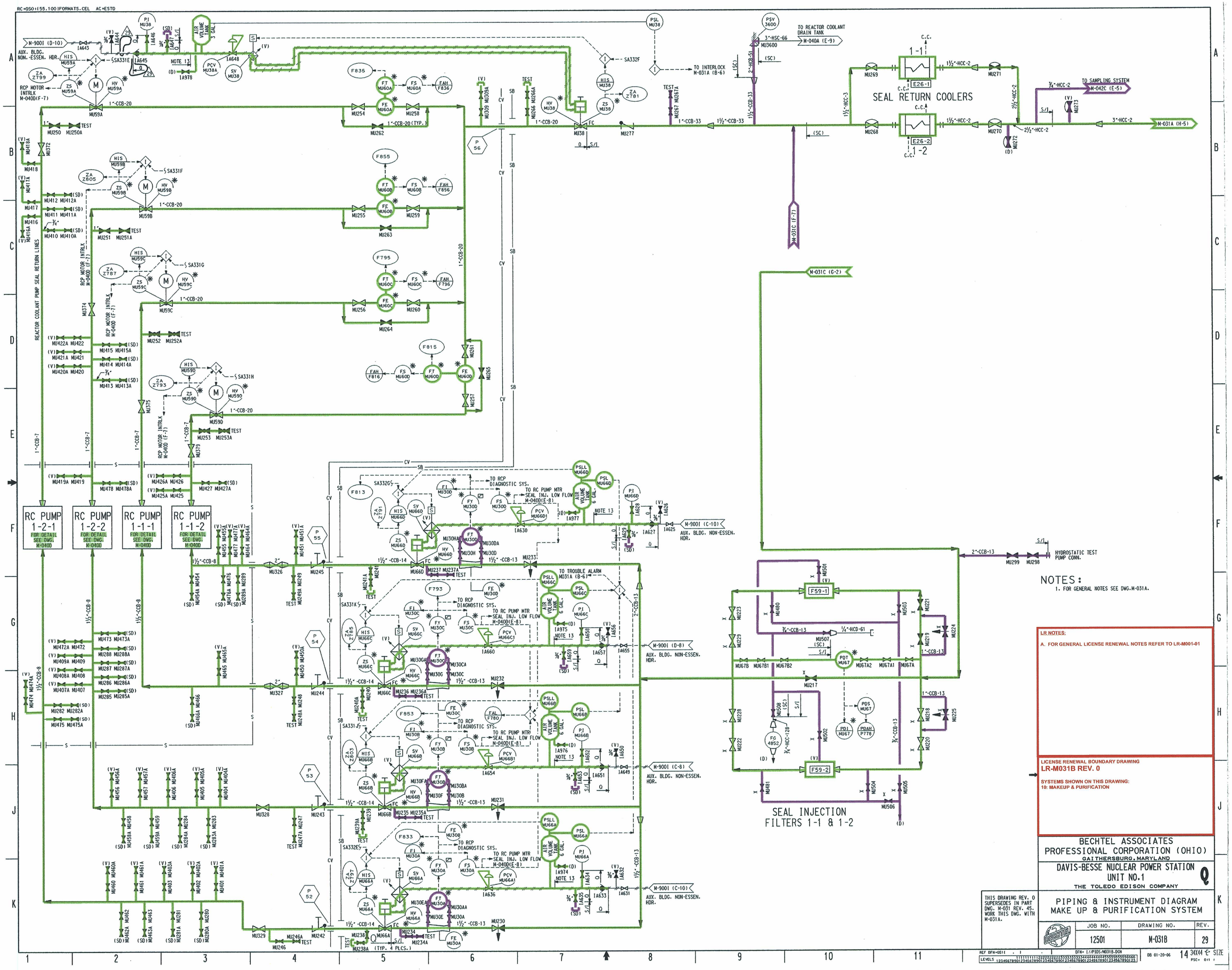

NOTES:
1. FOR GENERAL NOTES SEE DWG.M-031A.

LR NOTES:
A. FOR GENERAL LICENSE RENEWAL NOTES REFER TO LR-M001-01

LICENSE RENEWAL BOUNDARY DRAWING
LR-M031B REV. 0
SYSTEMS SHOWN ON THIS DRAWING:
10: MAKEUP & PURIFICATION

BECHTEL ASSOCIATES
PROFESSIONAL CORPORATION (OHIO)
GAITHERSBURG, MARYLAND

DAVIS-BESSE NUCLEAR POWER STATION
UNIT NO.1
THE TOLEDO EDISON COMPANY

THIS DRAWING REV. 0 SUPERSEDES IN PART DWG. M-031 REV. 45. WORK THIS DWG. WITH M-031A.

PIPING & INSTRUMENT DIAGRAM
MAKE UP & PURIFICATION SYSTEM

JOB NO.	DRAWING NO.	REV.
12501	M-031B	29

DB 01-20-06 14 34X44 E SIZE

D-47

01 D47