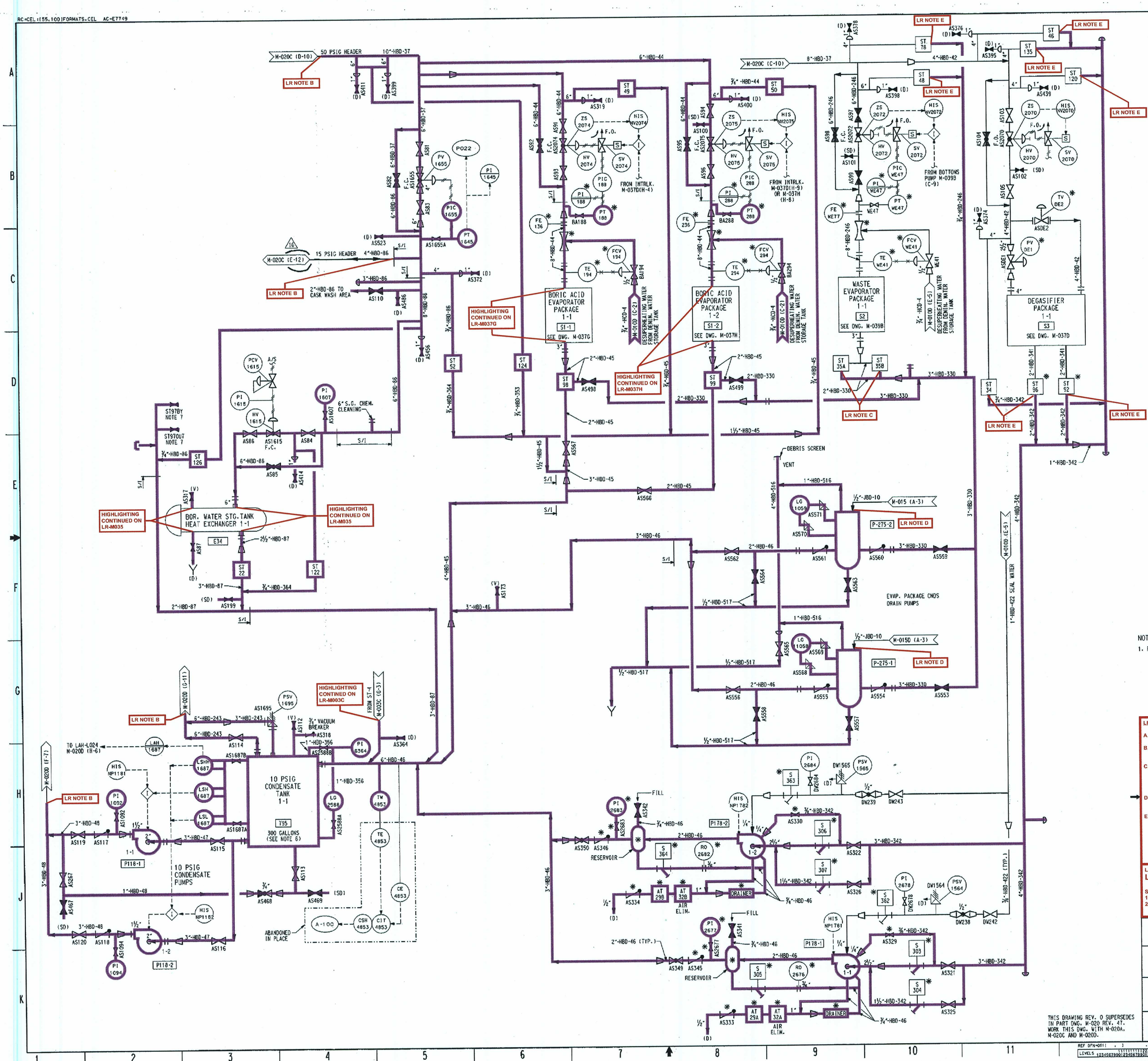

NOTES:

1. FOR NOTES SEE DRAWING M-020A.

LR NOTES:

A. FOR GENERAL LICENSE RENEWAL NOTES REFER TO LR-M001-01.

B. COMPONENTS LOCATED BEYOND THE HIGHLIGHTING ARE LOCATED IN THE TURBINE BUILDING, AND ARE THEREFORE NOT IN SCOPE.

C. WASTE EVAPORATOR PACKAGE ABANDONED IN PLACE AS NOTED ON LR-M039B. EACH STEAM TRAP HAS AN ASSOCIATED CHECK VALVE NOT SHOWN IN THIS DRAWING. THE CHECK VALVE PROVIDES ISOLATION.

D. COMPONENTS LOCATED BEYOND THE HIGHLIGHTING ARE AIR LINES AND ARE NOT IN SCOPE.

E. DEGASIFIER PACKAGE ABANDONED IN PLACE AS NOTED IN USAR TABLE 11.2-1. EACH STEAM TRAP HAS AN ASSOCIATED CHECK VALVE NOT SHOWN IN THIS DRAWING. THE CHECK VALVE PROVIDES ISOLATION.

LICENSE RENEWAL BOUNDARY DRAWING
LR-M020B REV. 1

SYSTEMS SHOWN ON THIS DRAWING:
13: COMPONENT COOLING & DEMINERALIZED WATER STORAGE
24: NONSAFETY AFFECTING SAFETY

THIS DRAWING REV. 0 SUPERSEDES IN PART DWG. M-020 REV. 47. WORK THIS DWG. WITH M-020A, M-020C AND M-020D.

BECHTEL ASSOCIATES PROFESSIONAL CORPORATION (OHIO)
GAITHERSBURG, MARYLAND

DAVIS-BESSE NUCLEAR POWER STATION
UNIT NO. 1
THE TOLEDO EDISON COMPANY

PIPING & INSTRUMENT DIAGRAM
AUXILIARY BUILDING
AUXILIARY STEAM SYSTEM

JOB NO.	DRAWING NO.	REV.
12501	M-020B	16

DB 01-22-03 14 34X44 "E" SIZE

01 D26