RC=CEL:(55,100)FORMATS.CEL AC=E7749

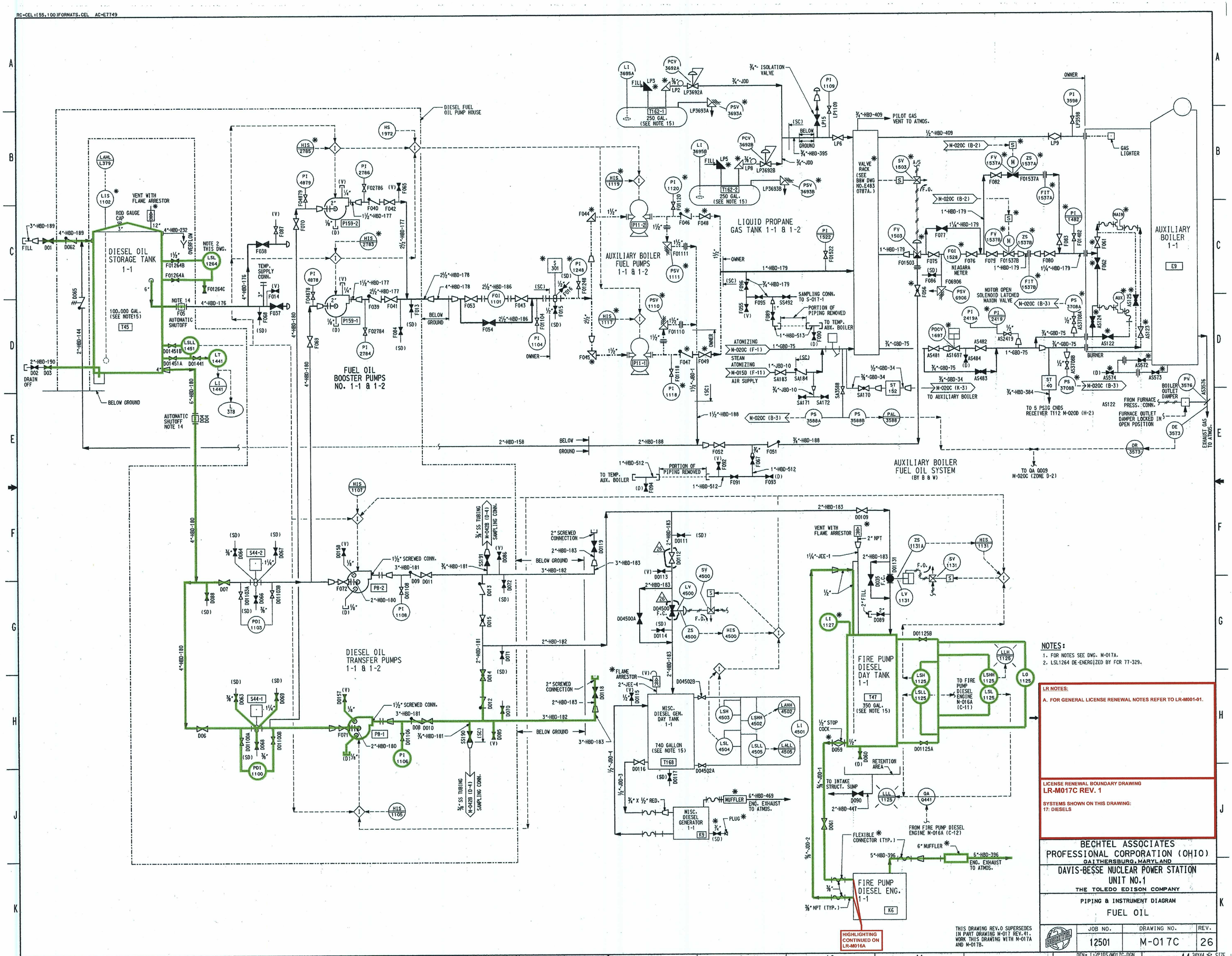

NOTES:

1. FOR NOTES SEE DWG. M-017A.
2. LSL1264 DE-ENERGIZED BY FCR 77-329.

LR NOTES:

A. FOR GENERAL LICENSE RENEWAL NOTES REFER TO LR-M001-01.

LICENSE RENEWAL BOUNDARY DRAWING
LR-M017C REV. 1

SYSTEMS SHOWN ON THIS DRAWING:
17: DIESELS

THIS DRAWING REV.0 SUPERSEDES IN PART DRAWING M-017 REV.41. WORK THIS DRAWING WITH M-017A AND M-017B.

BECHTEL ASSOCIATES PROFESSIONAL CORPORATION (OHIO)
GAITHERSBURG, MARYLAND

DAVIS-BESSE NUCLEAR POWER STATION
UNIT NO.1
THE TOLEDO EDISON COMPANY

PIPING & INSTRUMENT DIAGRAM
FUEL OIL

JOB NO.	DRAWING NO.	REV.
12501	M-017C	26

DFN= I:/PIDS/M017C.DGN DB 03-05-08 14 34X44 'E' SIZE

01 D22