RC=CEL:[55,100]FORMATS.CEL AC=E7749

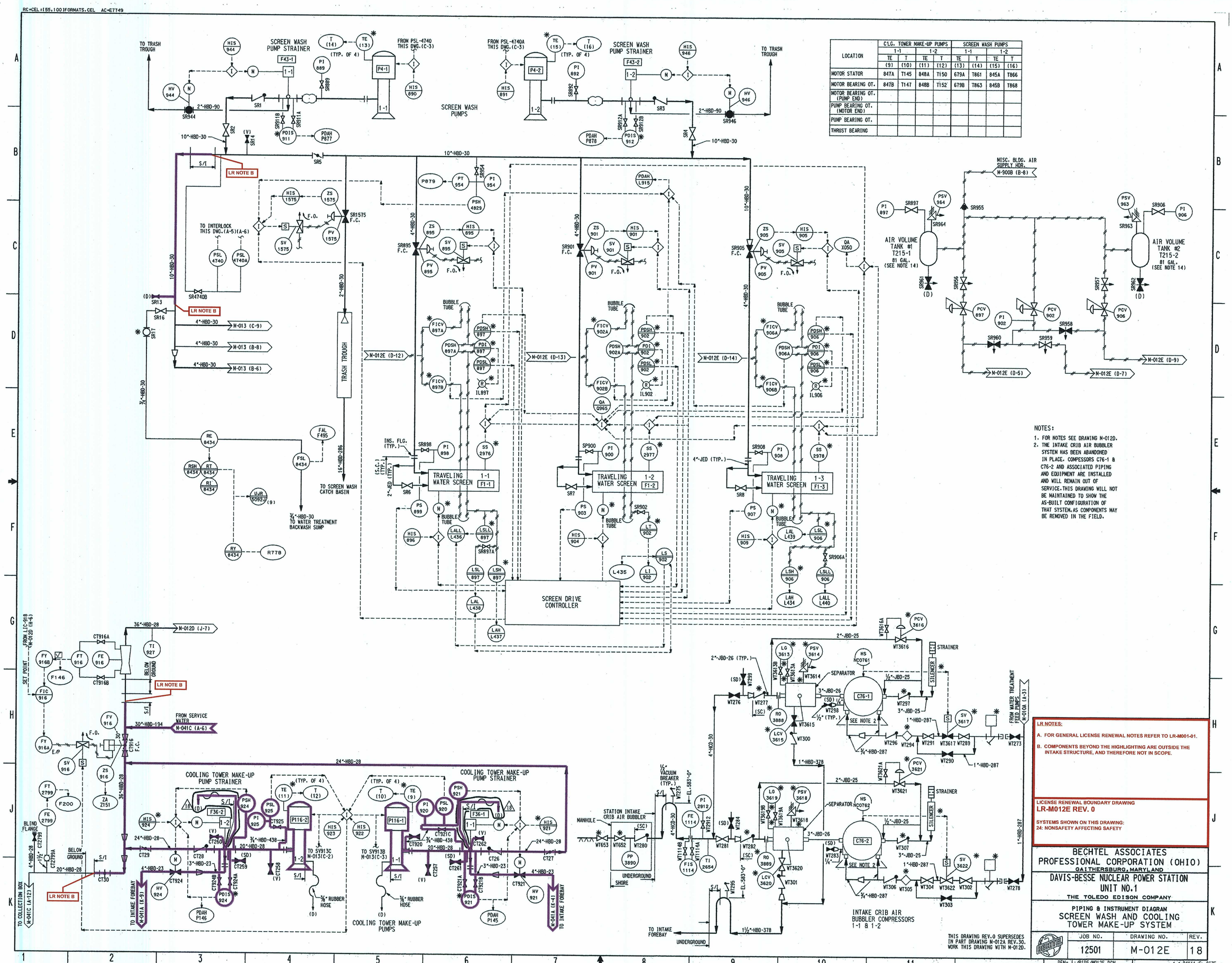

LOCATION	C.L.G. TOWER MAKE-UP PUMPS 1-1 TE (9)	1-1 T (10)	1-2 TE (11)	1-2 T (12)	SCREEN WASH PUMPS 1-1 TE (13)	1-1 T (14)	1-2 TE (15)	1-2 T (16)
MOTOR STATOR	847A	T145	848A	T150	679A	T861	845A	T866
MOTOR BEARING OT.	847B	T147	848B	T152	679B	T863	845B	T868
MOTOR BEARING OT. (PUMP END)								
PUMP BEARING OT. (MOTOR END)								
PUMP BEARING OT.								
THRUST BEARING								

NOTES:

1. FOR NOTES SEE DRAWING M-012D.
2. THE INTAKE CRIB AIR BUBBLER SYSTEM HAS BEEN ABANDONED IN PLACE. COMPESSORS C76-1 & C76-2 AND ASSOCIATED PIPING AND EQUIPMENT ARE INSTALLED AND WILL REMAIN OUT OF SERVICE. THIS DRAWING WILL NOT BE MAINTAINED TO SHOW THE AS-BUILT CONFIGURATION OF THAT SYSTEM. AS COMPONENTS MAY BE REMOVED IN THE FIELD.

LR NOTES:

A. FOR GENERAL LICENSE RENEWAL NOTES REFER TO LR-M001-01.

B. COMPONENTS BEYOND THE HIGHLIGHTING ARE OUTSIDE THE INTAKE STRUCTURE, AND THEREFORE NOT IN SCOPE.

LICENSE RENEWAL BOUNDARY DRAWING
LR-M012E REV. 0

SYSTEMS SHOWN ON THIS DRAWING:
24: NONSAFETY AFFECTING SAFETY

BECHTEL ASSOCIATES PROFESSIONAL CORPORATION (OHIO)
GAITHERSBURG, MARYLAND

DAVIS-BESSE NUCLEAR POWER STATION UNIT NO.1
THE TOLEDO EDISON COMPANY

PIPING & INSTRUMENT DIAGRAM
SCREEN WASH AND COOLING TOWER MAKE-UP SYSTEM

JOB NO.	DRAWING NO.	REV.
12501	M-012E	18

THIS DRAWING REV.0 SUPERSEDES IN PART DRAWING M-012A REV.30. WORK THIS DRAWING WITH M-012D.

DFN= I:/PIDS/M012E.DGN DB 08-28-07 14 34X44 "E" SIZE

01D15