APPENDIX C

SPATIAL STABILITY

8110240434 651206
PDR ADOCK 05000247
B PDR

APPENDIX C SPATIAL STABILITY

I. SUMMARY

A preliminary evaluation has been performed on the spatial stability of the power distribution for the proposed core design. The following conclusions have been reached:

a) There will be no tendency for self-induced xenon oscillations and therefore there will be no power redistribution and spatial stability will exist.

b) Any induced xenon redistribution, due to unforeseen mechanisms or unexpected operations will be damped and the instrumentation and control systems will have sufficient flexibility to detect the redistribution and correct the problem.

c) The negative Doppler coefficient provides sufficient damping to prevent the occurrance of moderator coefficient induced power redistribution oscillations.

II. XENON OSCILLATIONS

Extensive analyses of xenon oscillations in large pressurized water reactors have been made under the LRD Contract and are reported in reference (1). The properties of xenon oscillations can be determined by straightforward calculations described in reference (1) using readily available computer codes. The results have shown that the negative Doppler coefficient in PWRs damps any oscillation tendency and that sustained xenon oscillations will not occur.

Using a one-dimensional diffusion theory analysis, the effects of core height, power distribution, Doppler coefficient, and moderator coefficient on xenon oscillations have been evaluated. The results indicate:

1. Stability to xenon oscillations decreases with increasing core size.
2. Stability is sensitive to the power distribution, with flat or dished power shapes tending to be less stable than normal cosine distributions.
3. The Doppler coefficient is extremely important and is the principal damping mechanism in slightly enriched pressurized water reactors.
4. The moderator temperature coefficient has a relatively small effect on xenon oscillations.

(1) L. E. Strawbridge, et al, "Xenon Induced Core Instabilities", WCAP-3269-48, (February 1965).

In addition to the diffusion theory analysis, threshold analyses using the procedures of Randall and St. John[2] have been performed. In addition a revised threshold calculation procedure which eliminates certain approximations in the Randall and St. John procedure has been derived and the results from this procedure are in agreement with the diffusion theory results.

These preliminary studies indicate that the Doppler coefficient is sufficiently negative to prevent divergent xenon oscillations in a 12 ft. pressurized water reactor. Even though the negative Doppler coefficient prevents sustained xenon oscillations, analyses have been made for cores with such oscillations by arbitrarily reducing the Doppler coefficient far below the values found in PWR's. Methods of control were then studied to determine what instrumentation control actions were required to maintain controlled stability. The results showed that oscillations could be prevented (or eliminated after they had begun) by simple movements of the control rods.

As a result of these studies, sustained xenon oscillations are not expected to occur in this core. However, if they do occur by some unforeseen mechanism, the instrumentation and control system has sufficient flexibility to detect and correct the problem.

An axial calculation was performed for a core having similar properties to the Indian Point II design. The study assumed an enrichment of 3 per cent with the equilibrium core which results in the flattest flux distribution in the core cycle, therefore with minimum stability. The resulting power distribution is shown in Figure 1. At that time, a perturbation was introduced and the resulting transient was observed. The result is shown in Figure 2 where the power density at two symmetric points is plotted.

In this calculation the moderator coefficient was taken to be zero since it has been shown to have a small effect. However, a realistic Doppler coefficient was included in the calculation. It was calculated by a procedure (see Section 3.1.2.2) recently developed at WAPD based on experimental data from the Yankee, Saxton and BR-3 and SELNI reactors. The range of the Doppler coefficient at full power is expected to be $-1 \times 10^{-5}\ \Delta k/k\ /^{o}F$ to $-2 \times 10^{-5}\ \Delta k/k\ /^{o}F$. A value of $-1 \times 10^{-5}\ \Delta k/k\ /^{o}F$ was used in the study as it provides the smallest amount of damping during the transient.

---

(2) D. Randall and D. S. St. John, "Xenon Spatial Oscillations", NUCLEONICS, 16, No. 3, 82 (1958).

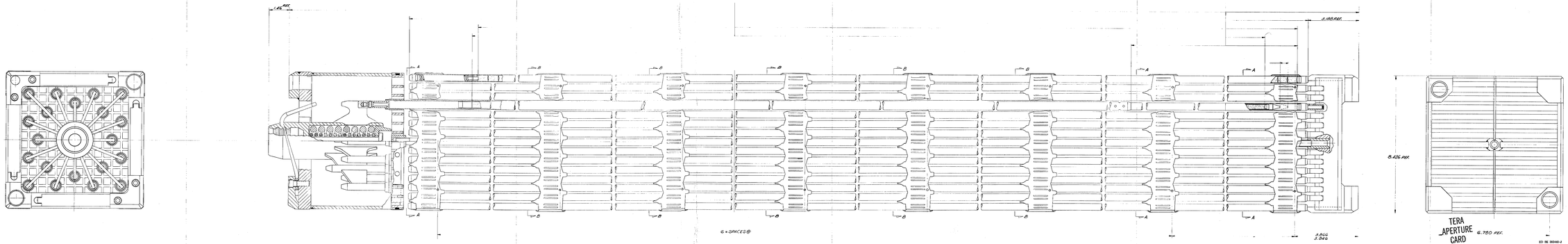

TERA APERTURE CARD

ED 38 30940-2

FUEL ASSEMBLY OUTLINE
FIG. 3.2-39

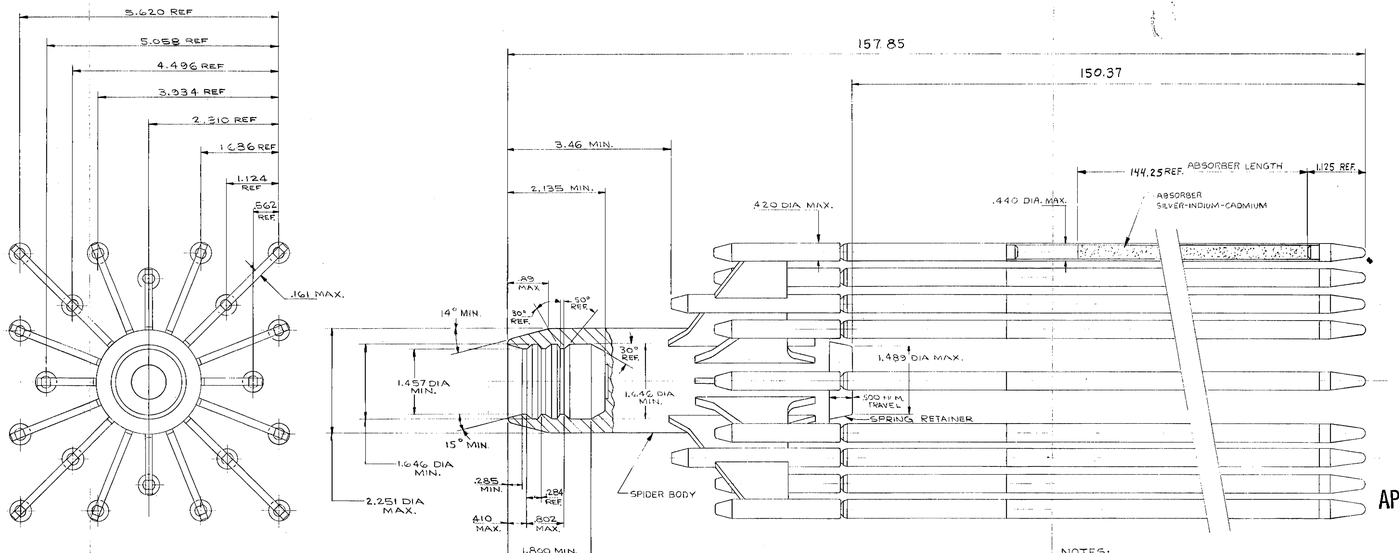

NOTES:

1. WITH THE EXCEPTION OF THE FOLLOWING ITEMS THE CONTROL ROD ASSEMBLY IS CONSTRUCTED ENTIRELY OF TYPE 304 SST. (ALL LOCATED WITHIN SPIDER BODY)
   A. SPRINGS (2 EA.) - INCONEL X-750
   B. SPRING RETAINER TYPE 17-4 PH SST. W PDS 12138-3

882D449

EST. WT. 140.14 LBS.

TERA APERTURE CARD

CONTROL ROD CLUSTER OUTLINE
FIG. 3.2-43

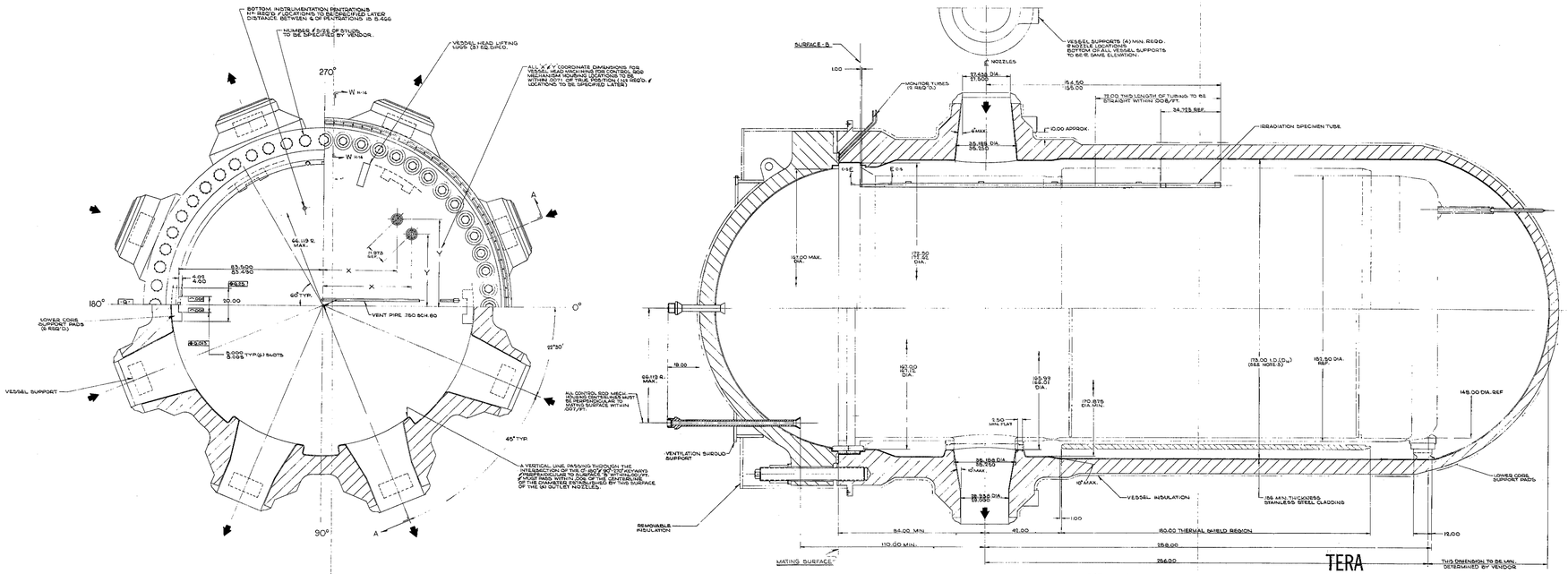

REACTOR VESSEL OUTLINE
FIG. 4-2

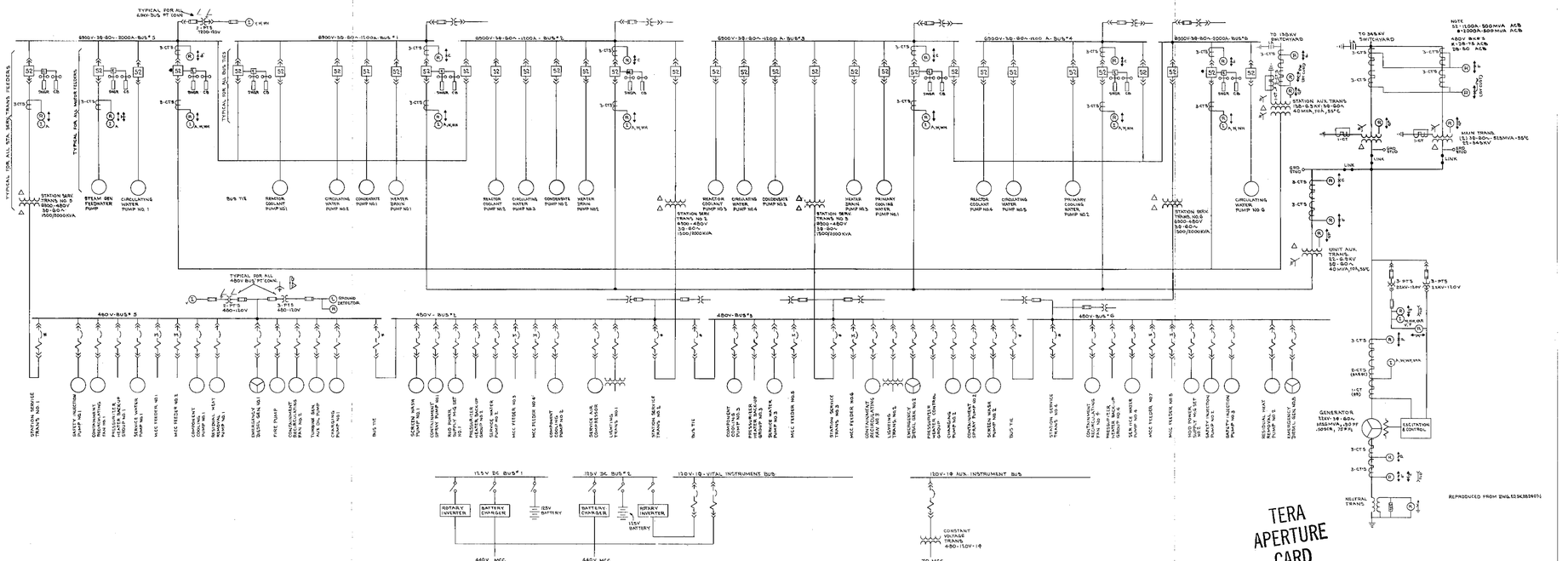

ELECTRICAL ONE LINE DIAGRAM
FIG. 8-2