CHAPTER 9
AUXILIARY SYSTEMS

TABLE OF CONTENTS

Section	Title	Page
9.1	FUEL STORAGE AND HANDLING	9.1-1
9.1.3.1.3.1	Partial Core	9.1-1
9.1.4.3.8	Radiation Monitoring	9.1-1
9.1.4.4	Inspection and Testing Requirements	9.1-1
9.1.5	OVERHEAD HEAVY LOAD HANDLING SYSTEMS	9.1-2
9.1.5.3	Safety Evaluation	9.1-3
9.1.5.4	Inservice Inspection/Inservice Testing	9.1-4
9.1.5.5	Load Handling Procedures	9.1-4
9.1.6	COMBINED LICENSE INFORMATION FOR FUEL STORAGE AND HANDLING	9.1-5
9.1.7	REFERENCES	9.1-6
9.2	WATER SYSTEMS	9.2-1
9.2.1.2.2	Component Description	9.2-1
9.2.2.1	Design Basis	9.2-1
9.2.5.2.1	General Description	9.2-2
9.2.5.3	System Operation	9.2-2
9.2.6.2.1	General Description	9.2-3
9.2.7.2.4	System Operation	9.2-3
9.2.8	TURBINE BUILDING CLOSED COOLING WATER SYSTEM	9.2-4
9.2.8.1.2	Power Generation Design Basis	9.2-4
9.2.8.2.1	System Description	9.2-4
9.2.8.2.2	Component Description	9.2-5
9.2.8.2.3	System Operation	9.2-5
9.2.9.2.2	Component Description	9.2-5
9.2.11	RAW WATER SYSTEM	9.2-6
9.2.11.1	Design Basis	9.2-7
9.2.11.1.1	Safety Design Basis	9.2-7
9.2.11.1.2	Power Generation Design Basis	9.2-7
9.2.11.1.2.1	Normal Operation	9.2-7
9.2.11.1.2.2	Outage Mode Operation	9.2-7
9.2.11.2	System Description	9.2-8
9.2.11.2.1	General Description	9.2-8
9.2.11.2.2	Component Description	9.2-8
9.2.11.3	System Operation	9.2-9
9.2.11.4	Safety Evaluation	9.2-10
9.2.11.5	Tests and Inspections	9.2-10
9.2.11.6	Instrumentation Applications	9.2-10
9.2.12	COMBINED LICENSE INFORMATION	9.2-11

TABLE OF CONTENTS (CONT.)

Section	Title	Page
9.2.12.1	Potable Water	9.2-11
9.2.12.2	Waste Water Retention Basins	9.2-11
9.2.13	REFERENCES	9.2-11
9.3	PROCESS AUXILIARIES	9.3-1
9.3.7	COMBINED LICENSE INFORMATION	9.3-1
9.4	AIR-CONDITIONING, HEATING, COOLING, AND VENTILATION SYSTEM	9.4-1
9.4.1.1.1	Safety Design Basis	9.4-1
9.4.1.2.3.1	Main Control Room/Control Support Area HVAC Subsystem	9.4-1
9.4.1.4	Tests and Inspection	9.4-1
9.4.7.4	Tests and Inspections	9.4-2
9.4.12	COMBINED LICENSE INFORMATION	9.4-3
9.4.13	REFERENCES	9.4-3
9.5	OTHER AUXILIARY SYSTEMS	9.5-1
9.5.1.2.1.3	Fire Water Supply System	9.5-1
9.5.1.6	Personnel Qualification and Training	9.5-1
9.5.1.8	Fire Protection Program	9.5-1
9.5.1.8.1	Fire Protection Program Implementation	9.5-2
9.5.1.8.1.1	Fire Protection Program Criteria	9.5-2
9.5.1.8.1.2	Organization and Responsibilities	9.5-2
9.5.1.8.2	Fire Brigade	9.5-5
9.5.1.8.2.1	General	9.5-5
9.5.1.8.2.2	Fire Brigade Training	9.5-5
9.5.1.8.2.2.1	Classroom Instruction	9.5-6
9.5.1.8.2.2.2	Retraining	9.5-7
9.5.1.8.2.2.3	Practice	9.5-7
9.5.1.8.2.2.4	Drills	9.5-7
9.5.1.8.2.2.5	Meetings	9.5-8
9.5.1.8.3	Administrative Controls	9.5-8
9.5.1.8.4	Control of Combustible Materials, Hazardous Materials and Ignition Sources	9.5-10
9.5.1.8.5	Control of Radioactive Materials	9.5-11
9.5.1.8.6	Testing and Inspection	9.5-11
9.5.1.8.7	Personnel Qualification and Training	9.5-12
9.5.1.8.8	Fire Doors	9.5-12
9.5.1.8.9	Emergency Planning	9.5-13
9.5.1.9	Combined License Information	9.5-13

TABLE OF CONTENTS (CONT.)

Section	Title	Page
9.5.1.9.1	Qualification Requirements for Fire Protection Program	9.5-13
9.5.1.9.2	Fire Protection Analysis Information	9.5-13
9.5.1.9.3	Regulatory Conformance	9.5-13
9.5.1.9.4	NFPA Exceptions	9.5-14
9.5.1.9.6	Verification of Field Installed Fire Barriers	9.5-14
9.5.1.9.7	Establishment of Procedures to Minimize Risk for Fire Areas Breached During Maintenance	9.5-14
9.5.2.5	Combined License Information	9.5-14
9.5.2.5.1	Offsite Interfaces	9.5-14
9.5.2.5.2	Emergency Offsite Communications	9.5-14
9.5.2.5.3	Security Communications	9.5-15
9.5.4.5.2	Fuel Oil Quality	9.5-15
9.5.4.7	Combined License Information	9.5-15
9.5.4.7.2	Fuel Degradation Protection	9.5-15
9.5.5	REFERENCES	9.5-16
APP. 9A	FIRE PROTECTION ANALYSIS	9A-1
9A.3.3	Yard Area and Outlying Buildings	9A-1
9A.3.3.1	CWS Cooling Towers	9A-1
9A.3.3.2	CWS Intake Structures	9A-1
9A.3.3.3	RWS Intake Structure	9A-2
9A.3.3.4	Warehouse	9A-3
9A.3.3.5	Service Building	9A-3
9A.3.3.6	Sanitary Waste Treatment	9A-4
9A.3.3.7	Hydrogen Storage Tank Area	9A-4
9A.4	REFERENCES	9A-5

LIST OF TABLES

Number	Title
9.5-201	AP1000 Fire Protection Program Compliance with BTP CMEB 9.5-1
9.5-202	Exceptions to NFPA Standard Requirements

LIST OF FIGURES

Number	Title
9.2-201	Raw Water System Flow Diagram
9A-201	Annex I and II Building Fire Areas Plan at Elevation 100’-0" & 107’-2"

Chapter 9
AUXILIARY SYSTEMS

9.1 FUEL STORAGE AND HANDLING

This section of the referenced DCD is incorporated by reference with the following departures and/or supplements.

9.1.3.1.3.1 Partial Core

Add the following information at the end of the third bullet in DCD Subsection 9.1.3.1.3.1.

VCS DEP 2.0-2 SFS performance following restart after a normal refueling is affected by a change in maximum safety wet bulb temperature. Calculations confirm that spent fuel pool temperature remains below 115°F with a CCS supply temperature of 97°F at the specified pool spent fuel loading condition and decay time on the fuel fraction just replaced during the previous 17 day refueling outage.

While the maximum CCS temperature expected for VCSNS Units 2 and 3 is 97.3°F, an increase of 0.3°F in CCS supply temperature will produce a similar increase in the spent fuel pool maximum temperature; therefore, the requirement to maintain spent fuel temperature below 120°F is met with margin (Reference 201).

Add the following subsection after DCD Subsection 9.1.4.3.7.

9.1.4.3.8 Radiation Monitoring

STD COL 9.1-6 Plant procedures require that an operating radiation monitor is mounted on any machine when it is handling fuel. Refer to DCD Subsection 11.5.6.4 for a discussion of augmented radiation monitoring during fuel handling operations.

9.1.4.4 Inspection and Testing Requirements

Add the following paragraph at the end of DCD Subsection 9.1.4.4.

STD COL 9.1-5 The above requirements are part of the plant inspection program for the light load handling system, which is implemented through procedures. In addition to the

above inspections, the procedures reflect the manufacturers' recommendations for inspection. The light load handling program, including system inspections, is implemented prior to receipt of fuel onsite.

9.1.5 OVERHEAD HEAVY LOAD HANDLING SYSTEMS

Add the following at the end of DCD Subsection 9.1.5.

STD SUP 9.1-2 The heavy loads handling program is based on NUREG 0612 and vendor recommendations. The key elements of the program are:

- Listing of heavy loads to be lifted during operation of the plant. This list will be provided once magnitudes have been accurately formalized but no later than three (3) months prior to fuel receipt.
- Listing of heavy load handling equipment as outlined in DCD Table 9.1-5 and whose characteristics are described in Subsection 9.1.5 of the DCD.
- Heavy load handling safe load paths and routing plans including descriptions of interlocks, (automatic and manual) safety devices and procedures to assure safe load path compliance. Anticipated heavy load movements are analyzed and safe load paths defined. Safe load path considerations are based on comparison with analyzed cases, previously defined safe movement areas, and previously defined restricted areas. The analyses are in accordance with Appendix A of NUREG 0612.
- Heavy load handling equipment maintenance manuals and procedures as described in Subsection 9.1.5.5.
- Heavy load handling equipment inspection and test plans, as outlined in Subsections 9.1.5.4 and 9.1.5.5.
- Heavy load handling personnel qualifications, training, and control procedures as described in Subsection 9.1.5.5.
- QA programs to monitor, implement, and ensure compliance with the heavy load-handling procedures as described in Subsection 9.1.5.5.

A quality assurance program, consistent with Paragraph 10 of NUREG-0554, is established and implemented for the procurement, design, fabrication, installation, inspection, testing, and operation of the crane. The program, as a minimum, includes the following elements:

- design and procurement document control

- instructions, procedures, and drawings
- control of purchased material, equipment, and services
- inspection
- testing and test control
- non-conforming items
- corrective action
- records

9.1.5.3 Safety Evaluation

Add the following information at the end of DCD Subsection 9.1.5.3.

STD SUP 9.1-1 There are no planned heavy load lifts outside those already described in the DCD. However, over the plant life there may be occasions when heavy loads not presently addressed need to be lifted (i.e. in support of special maintenance/ repairs). For these occasions, special procedures are generated that address, as a minimum, the following:

- The special procedure complies with NUREG-0612.
- A safe load path is determined. Mechanical and/or electrical stops are incorporated in the hardware design to prohibit travel outside the safe load path. Maximum lift heights are specified to minimize the impact of an unlikely load drop.
- Where a load drop could occur over irradiated fuel or safe shutdown equipment, the consequence of the load drop is evaluated. If the evaluation concludes that the load drop is not acceptable, an alternate path is evaluated, or the lift is prohibited.
- The lifting equipment is in compliance with applicable ANSI standards and has factors of safety that meet or exceed the requirements of the applicable standards.
- Operator training is provided prior to actual lifts.
- Inspection of crane components is performed in accordance with the manufacturer recommendations.

STD COL 9.1-6 Plant procedures require that an operating radiation monitor is mounted on any crane when it is handling fuel. Refer to DCD Subsection 11.5.6.4 for a discussion of augmented radiation monitoring during fuel handling operations.

9.1.5.4 Inservice Inspection/Inservice Testing

Add the following paragraph at the end of DCD Subsection 9.1.5.4.

STD COL 9.1-5 The above requirements are part of the plant inspection program for the overhead heavy load handling system, which is implemented through procedures. In addition to the above inspections, the procedures reflect the manufacturers' recommendations for inspection and the NUREG-0612 recommendations.

The overhead heavy load handling equipment inservice inspection procedures, as a minimum, address the following:

- Identification of components to be examined
- Examination techniques
- Inspection Intervals
- Examination categories and requirements
- Evaluation of examination results

The overhead heavy load handling program, including system inspections, is implemented prior to receipt of fuel onsite.

9.1.5.5 Load Handling Procedures

STD SUP 9.1-3 Load handling operations for heavy loads that are handled over, could be handled over or are in the proximity of irradiated fuel or safe shutdown equipment are controlled by written procedures. As a minimum, procedures are used for handling loads with the spent fuel cask bridge and polar cranes, and for those loads listed in Table 3.1-1 of NUREG 0612. The procedures include and address the following elements:

- The specific equipment required to handle load (e.g., special lifting devices, slings, shackles, turnbuckles, clevises, load cells, etc.).

- Qualification and training of crane operators and riggers in accordance with chapter 2-3.1 of ASME B30.2, “Overhead and Gantry Cranes.”
- The requirements for inspection and acceptance criteria prior to load movement.
- The defined safe load path and provisions to provide visual reference to the crane operator and/or signal person of the safe load path envelope.
- Specific steps and proper sequence to be followed for handling load.
- Precautions, limitations, prerequisites, and/or initial conditions associated with movement of heavy loads.
- The testing, inspection, acceptance criteria and maintenance of overhead heavy load handling systems. These procedures are in accordance with the manufacturer recommendations and are consistent with ANSI B30.2 or with other appropriate and applicable ANSI standards.

Safe load paths are defined for movement of heavy loads to minimize the potential for a load drop on irradiated fuel in the reactor vessel, spent fuel pool or safe shutdown equipment. Paths are defined clearly in procedures and equipment layout drawings. Equipment layout drawings showing the safe load path are used to define safe load paths in load handling procedures. Deviation from defined safe load paths requires a written alternative procedure approved by a plant safety review committee.

9.1.6 COMBINED LICENSE INFORMATION FOR FUEL STORAGE AND HANDLING

STD COL 9.1-5 This COL Item is addressed in Subsections 9.1.4.4 and 9.1.5.4.

STD COL 9.1-6 This COL Item is addressed in Subsections 9.1.4.3.8 and 9.1.5.3.

STD COL 9.1-7 A spent fuel rack Metamic coupon monitoring program will be implemented when the plant is placed into commercial operation. This program will include tests to monitor bubbling, blistering, cracking, or flaking; and a test to monitor for corrosion, such as weight loss measurements and / or visual examination. The program will also include testing to monitor changes in physical properties of the absorber material, including neutron attenuation and thickness measurements.

The program will include the methodology and acceptance criteria for the tests listed and provide corrective action requirements based on vendor recommendations and industry operating experience. The program will be implemented through plant procedures.

Metamic Monitoring Acceptance Criteria:

- Verification of continued presence of the boron is performed by neutron attenuation measurement. A decrease of no more than 5% in Boron-10 content, as determined by neutron attenuation, is acceptable. This is equivalent to a requirement for no loss in boron within the accuracy of the measurement.

- Coupons are monitored for unacceptable swelling by measuring coupon thickness. An increase in coupon thickness at any point of no more than 10% of the initial thickness at that point is acceptable.

Changes in excess of either of the above two acceptance criteria are investigated under the corrective action program and may require early retrieval and measurement of one or more of the remaining coupons to provide validation that the indicated changes are real. If the deviation is determined to be real, an engineering evaluation is performed to identify further testing or any corrective action that may be necessary.

Additional parameters are examined for early indications of the potential onset of Metamic degradation that would suggest a need for further attention and possibly a change in the coupon withdrawal schedule. These include visual inspection for surface pitting, blistering, cracking, corrosion or edge deterioration, or unaccountable weight loss in excess of the measurement accuracy.

9.1.7 REFERENCES

201. Westinghouse: Evaluation of Impacts: Change to Maximum Safety Non-Coincident Ambient Wet Bulb Temperature For the V.C. Summer Site, VSP_VSG_000706, June 30, 2010.

9.2 WATER SYSTEMS

This section of the referenced DCD is incorporated by reference with the following departures and/or supplements.

9.2.1.2.2 Component Description

Add the following paragraph at the end of DCD Subsection 9.2.1.2.2, "Component Description," subsection "Cooling Tower":

VCS SUP 9.2-3 The SWS cooling tower was evaluated for potential impacts from interference and air restriction effects due to yard equipment layout and tower operation in an adjacent unit. Based on unit spacing, yard equipment layout, and the margins inherent in the performance requirements and design conditions of the towers, no adverse impacts were determined.

9.2.2.1 Design Basis

Replace the first bullet item in the criteria for normal operation in DCD Subsection 9.2.2.1.2.1 with the following information.

VCS DEP 2.0-2

- The component cooling water supply temperature to plant components is not more than 100°F assuming a 100-year return estimate of 2-hour duration wet bulb temperature of 87.3°F for service water cooling (per Table 2.0-201).

  The most limiting component cooled by the CCS, the RCP motor cooling system, has been designed to operate for at least 6 hours continually with cooling water supplied at temperatures up to 100°F.

  The performance of the standard AP1000 CCS and SWS for single cooling water train, full power operation at a maximum safety wet bulb temperature of 87.4°F has demonstrated the highest CCS temperature achieved at these conditions is 97.4°F, for a period of less than 2 hours. As ambient wet bulb temperature decreases, the CCS temperature follows and will return to below 95°F with ambient wet bulb temperature slightly lower than 84°F, assuming nominal performance of both the CCS and SWS. Since the definition of the maximum normal wet bulb temperature value is the seasonal 1% exceedance value observed at the site, the annual total operating time for which CCS temperature could exceed 95°F is less than 30 hours per year, for periods of a few hours at most. The

maximum CCS temperature of 97.3° is bounded by the maximum allowable cooling water temperature for Reactor Coolant Pumps (the most limiting component) and the increase in maximum safety wet bulb temperature is therefore acceptable on this basis (Reference 201).

9.2.5.2.1 General Description

Modify the second paragraph of DCD Subsection 9.2.5.2.1 as follows:

VCS COL 9.2-1 Potable water is supplied from a nearby water treatment facility that withdraws raw water from the Monticello Reservoir for treatment, storage, and transfer to the plant potable water system. The potable water system consists of a distribution header around the power block, hot water storage heaters, and necessary interconnecting piping and valves. The water treatment facility includes the tankage, pumps, and water treatment equipment necessary to provide potable water through a supply line to the distribution headers to meet design pressure and capacity requirements of the potable water system. Sodium hypochlorite is used as the biocide for the potable water system.

9.2.5.3 System Operation

Add the following after the first paragraph of DCD Subsection 9.2.5.3 as follows:

VCS COL 9.2-1 The site specific water source described above is considered to be the off-site water treatment facility. Filtered water described above is generated and disinfected at the off-site water treatment facility to provide a make-up source of drinking water to the Potable Water System (PWS). The location of the off-site water treatment facility is shown on FSAR Figure 1.1-202, “VCSNS Site Plan.” This facility also provides a make-up source of filtered water to the Raw Water System (RWS) to support loads described in Subsection 9.2.11 of the FSAR. The facility is depicted on FSAR Figure 9.2-201, “Raw Water System Flow Diagram.”

Add the following after the second paragraph of DCD Subsection 9.2.5.3 as follows:

VCS COL 9.2-1 The onsite water supply system described above is considered to be the off-site water treatment facility.

Add the following after the fourth paragraph of DCD Subsection 9.2.5.3 as follows:

VCS COL 9.2-1 The possibility for the PWS to become contaminated radioactively does not exist. The Raw Water System (RWS) does not have the potential to be a flowpath for radioactive fluids. Because RWS does not have the potential to be a flowpath for radioactive fluids, its filtered water make-up source from the off-site water treatment facility does not have the potential to be contaminated radioactively. Since the only association the make-up water to RWS has with the make-up water supply to PWS is the off-site water treatment facility, the possibility for PWS to become contaminated radioactively does not exist.

9.2.6.2.1 General Description

Add the following paragraph at the end of DCD Subsection 9.2.6.2.1.

VCS SUP 9.2-1 The waste treatment plant is preengineered and prefabricated, of modular construction, and includes components such as blowers; equalization, aeration, and sludge holding tanks; clarifiers; and disinfection units; which are used in a multistep process to treat sanitary waste prior to effluent discharge to the blowdown sump where it combines with other plant discharge streams for discharge to the Parr Reservoir.

9.2.7.2.4 System Operation

Add the following information at the end of the first paragraph under “Normal Operation” in DCD Subsection 9.2.7.2.4.

VCS DEP 2.0-2 The increased heat load produced by operation at the higher VCSNS maximum safety ambient wet bulb temperature of 87.3°F can be accommodated within the available capacity margin of the chiller units, without impacting the LCCWS or supporting systems design or plant operation. Cooling coil design calculations indicate that during operation at the standard plant design temperatures (115°F dry bulb, 86.1° wet bulb), the VBS air handling unit has cooling coil and system margin (Reference 201).

9.2.8 TURBINE BUILDING CLOSED COOLING WATER SYSTEM

Modify the first paragraph of DCD Subsection 9.2.8 as follows:

VCS CDI

The turbine building closed cooling water system (TCS) provides chemically treated, demineralized cooling water for the removal of heat from nonsafety-related heat exchangers in the turbine building and rejects the heat to the circulating water system (CWS). When the CWS is not in operation and only minor heat loads attributed to sporadic cooling of components under shutdown conditions or in preparation for startup, the TCS may reject heat to water supplied by the raw water system (RWS) to the CWS.

9.2.8.1.2 Power Generation Design Basis

Modify the second paragraph of DCD Subsection 9.2.8.1.2 as follows:

VCS CDI

During power operation, the turbine building closed cooling water system provides a continuous supply of cooling water to turbine building equipment at a temperature of 105°F or less assuming a circulating water temperature of 100°F or less.

Modify the fourth paragraph of DCD Subsection 9.2.8.1.2 as follows:

VCS CDI

The heat sink for the turbine building closed cooling water system is the CWS during power operation. The heat is transferred to the CWS through plate type heat exchangers which are components of the turbine building closed cooling water system.

9.2.8.2.1 System Description

Modify the last sentence of the first paragraph of DCD Subsection 9.2.8.2.1 as follows:

VCS CDI

Heat is removed from the turbine building closed cooling water system by the CWS, or water supplied by the RWS to the CWS when applicable, via the heat exchangers.

9.2.8.2.2 Component Description

Modify the second and third sentences of the second paragraph under Heat Exchangers of DCD Subsection 9.2.8.2.2 as follows:

VCS CDI

Turbine building closed cooling water circulates through one side of the heat exchanger while circulating water, or water supplied by the RWS to the CWS when applicable, flows through the other side. During system operation, the turbine building closed cooling water in the heat exchanger is maintained at a higher pressure than the circulating water, or raw water, so leakage of the circulating water, or raw water, into the closed cooling water system does not occur.

9.2.8.2.3 System Operation

Modify the first sentence of the first paragraph under Startup of DCD Subsection 9.2.8.2.3 as follows:

VCS CDI

The turbine building closed cooling water system is placed in operation during the plant startup sequence after cooling water flow from the CWS, or RWS when applicable, is established but prior to the operation of systems that require turbine building closed cooling water flow.

9.2.9.2.2 Component Description

Add the following text under the Waste Water Retention Basin paragraph of DCD Subsection 9.2.9.2.2 and add Basin Transfer Pumps as follows:

VCS COL 9.2-2

The waste water retention basin is constructed using formed concrete and is a lined basin constructed such that its contents, dissolved or suspended, do not penetrate the liner and leach into the ground. Each Unit's Waste Water Retention Basin (WWRB) is located in the yard area outside of each Unit's respective Turbine Building. The WWRB is designed to allow entrained solids to settle and allow for chemical treatment of effluent concentrations required for release prior to discharge to the blowdown sump.

The configuration and size of the waste water retention basin allows settling of solids larger than 10 microns that may be suspended in the waste water stream. Waste water can be sampled prior to discharge from the waste water retention basin.

Each WWRB is divided into two separate compartments, which allows one compartment to be out of service while the other compartment is available. Each compartment discharges to a pump sump. A level transmitter located in each WWRB pump sump provides an alarm signal in the Main Control Room when the sump level(s) reach predetermined set points.

Basin Transfer Pumps

In the event of oily waste leakage into the retention basin, a recirculation line is provided to recycle the oil/water waste from the basin to the oil separator. The WWRB transfer pumps are located in pump sumps adjacent to each compartment.

The pumps are manually started and interlocked to stop based on sump level. There are two (one per sump) 100% capacity transfer pumps for each WWRB. The transfer pumps are sized to meet the maximum expected influent flow. The normal pump discharge flowpath is to the blowdown sump. Flow can also be directed to the other Unit's WWRB.

Blowdown Sump/Plant Outfall

The blowdown sump is a concrete structure and is open to the atmosphere. It is a common sump and accepts waste water from both Units' WWRBs, CWS cooling tower blowdown from both Units and sanitary waste effluent. In the absence of CWS cooling tower blowdown, RWS supplies an alternate source of dilution water. The outfall pipe is sized with adequate capacity to gravity drain the blowdown sump at the highest anticipated influent flow rate. Wastewater and blowdown effluent from the blowdown sump drains by gravity to Parr Reservoir via the plant outfall piping. Location of the plant outfall routing is shown on FSAR Figure 1.1-202.

STD DEP 1.1-1 Add the following subsection after DCD Subsection 9.2.10. DCD Subsections 9.2.11 and 9.2.12 are renumbered as Subsections 9.2.12 and 9.2.13, respectively.

9.2.11 RAW WATER SYSTEM

VCS SUP 9.2-2 The RWS supplies unfiltered water from the Monticello Reservoir for CWS cooling tower makeup and an alternate source of water makeup for the SWS cooling tower. A nearby water treatment facility provides filtered water for distribution by the Ancillary RWS Subsystem for normal supply to the demineralized water

treatment system, fire protection system, normal makeup to the SWS cooling tower, and miscellaneous users. The RWS also provides water for dilution of liquid radwaste when CWS blowdown is not sufficient or available for that purpose. The RWS may also be used to provide an alternate means of cooling the turbine building closed cooling water and condenser vacuum pump seal water heat exchangers.

9.2.11.1 Design Basis

9.2.11.1.1 Safety Design Basis

The RWS serves no safety-related function and therefore has no nuclear safety design basis.

Failure of the RWS or its components will not affect the ability of safety-related systems to perform their intended function.

The RWS does not have the potential to be a flow path for radioactive fluids.

9.2.11.1.2 Power Generation Design Basis

9.2.11.1.2.1 Normal Operation

The RWS provides continuous makeup to the circulating water cooling tower basins to replace water losses due to evaporation, drift, and blowdown. The RWS also supplements or is used in place of CWS blowdown for dilution of liquid radwaste during discharge through the plant outfall.

The RWS provides filtered water from the water treatment facility for supply of the following:

- Service water system cooling tower basin makeup
- Demineralized water treatment system supply
- Primary and secondary fire water tank fill and makeup

The RWS also provides an alternate supply of unfiltered water for the following:

- Service water system alternate makeup
- Turbine building closed cooling water heat exchanger cooling
- Condenser vacuum pump seal water heat exchanger cooling

9.2.11.1.2.2 Outage Mode Operation

During plant outages, RWS provides the same continuous water supplies as during normal operation with the exception of CWS cooling tower makeup. RWS

provides an alternate dilution flowpath for WLS when CWS blowdown is not available.

9.2.11.2 System Description

9.2.11.2.1 General Description

The RWS for a single unit is shown in Figure 9.2-201. Additional components and instrumentation are included as necessary for use and operation of the system. Classification of components and equipment for the RWS is given in Section 3.2.

The raw water pumps are located in individual bays of the raw water pump intake structure, a common structure for both units. Water withdrawn from the Monticello Reservoir passes through trash racks and traveling water screens before entering the pump suctions. The raw water pumps supply makeup water to the CWS at the cooling tower basins. A flow path is included to provide raw water for dilution of liquid radwaste discharged through the blowdown sump and plant outfall when CWS blowdown is not sufficient or available for dilution purposes. Flow can also be provided to the turbine building closed cooling water and condenser vacuum pump seal water heat exchangers for cooling when the CWS is not in operation. A screen wash system for the traveling water screens is provided at the intake structure.

Raw water for makeup to the service water system, fill and makeup to the fire water storage tanks, and feed to the demineralized water treatment system is provided from a water treatment facility that withdraws water from the Monticello Reservoir separate from the raw water pump intake structure. If conditions warrant, flow can also be provided for makeup to the service water system using the raw water pumps.

Provisions are included to inject chemicals into the raw water pump discharge piping to maintain a noncorrosive, nonscale-forming condition and limit biological fouling. Chemical treatment may also be performed at locations downstream of the raw water pumps and in or downstream of the water treatment facility to satisfy the supply water quality requirements of the systems to which the water is provided.

9.2.11.2.2 Component Description

Major components of the RWS are described below to provide an understanding of the operation and reliability of the system.

Intake

The raw water intake structure supports the pumps and related equipment for the RWS. The raw water pumps are located in individual bays of the raw water pump intake structure, a common structure for both units.

As discussed in FSAR Subsection 2.4.7, the minimum recorded surface water temperature in the reservoir was 37.6°F. Therefore, the potential that ice jams, frazil ice formation, or floating debris would prevent the RWS makeup to SWS is not credible.

Raw Water Pumps

Three 50% capacity raw water pumps are provided for each unit. The raw water pumps are vertical, centrifugal, constant-speed electric motor-driven pumps.

Trash Racks and Traveling Screens

Trash racks are provided for each raw water pump intake bay to prevent large debris from entering the pump intake bays.

Dual-flow traveling screens are provided in each pump bay for coarse screening of floating and suspended debris. The screens are sized to maintain a through-screen velocity of less than 0.5 feet per second to minimize the uptake of aquatic biota. A screen wash system is provided to wash off buildup on the screens.

Screen Wash Pumps

Two 100% capacity screen wash pumps are provided for each unit to draw strained water from two of each unit's raw water pump intake bays before supplying the spray water to the traveling screen through the spray wash header, which is common for all three traveling screens of each unit.

Piping

The RWS piping is designed to accommodate transient effects associated with normal operation such as starting or stopping of pumps, opening or closing of valves, or other normal operating events. The underground portions of the RWS piping are also designed to resist external loads. The system design prevents formation of voids on loss of system pumping and allows release or removal of trapped air on pump starting. Materials are selected with consideration to the effects of the external environment and internal fluid conditions. The RWS piping is designed to ASME Standard B31.1.

9.2.11.3 System Operation

For each unit, one or two raw water pumps normally operate depending on demand. The raw water pumps provide a continuous supply of water to the CWS to support normal plant operation. The raw water pumps can also provide flow for dilution of liquid radwaste when CWS blowdown is not available or sufficient for dilution for discharge through the blowdown sump discharge line and plant outfall.

Raw water for continuous makeup to the service water cooling tower basins and supply as required to the demineralized water treatment system and fire water tanks is provided from the water treatment facility. The water treatment facility

includes equipment and storage capability as necessary to provide filtered and chemically treated raw water of the quality required at the interface with the various systems served and to meet the demands of those systems.

The RWS is designed to operate during all normal modes of operation and components are powered from normal ac sources. Two of each unit's raw water pumps can also be aligned to receive power from the standby diesel generators to provide makeup to the service water cooling tower basins, if necessary, following a loss of normal ac power.

9.2.11.4 Safety Evaluation

The RWS has no safety-related function and therefore requires no nuclear safety evaluation.

The RWS does not have the potential to be a flow path for radioactive fluids. The WLS discharge effluent is connected to the cooling tower blowdown pipe downstream of the RWS interface. Per DCD 11.2.3.3, the WLS effluent is released offsite through a dilution flow stream. Dilution flow is provided from the cooling tower blowdown. During normal power operation, the CWS circulating water pumps provide dilution flow to the cooling tower blowdown pipe. When CWS is not operational, RWS provides dilution flow by an interconnection with the circulating water blowdown line well upstream of the WLS connection. Contamination of the RWS is not possible since the WLS effluent gravity discharges to the blowdown pipe downstream of the RWS interface.

9.2.11.5 Tests and Inspections

Initial test requirements for the RWS are described in Subsection 14.2.9.4.24.

Performance, hydrostatic, and leakage tests associated with installation and preoperational testing are performed on the RWS. The system performance and structural and leaktight integrity of system components are demonstrated by operation of the system.

9.2.11.6 Instrumentation Applications

Pressure indication, with low and high alarms, is provided on the discharges of the raw water pumps. A low discharge pressure signal automatically starts the designated standby pump. Pressure indication, alarms, and controls for pumps included in the water treatment facility ensure the required pressure and flow of the raw water supply from that facility.

Level instrumentation on the fire water tanks automatically opens the fill valve on low tank level and closes on high level.

Instrumentation requirements for makeup to the SWS and CWS cooling tower basins are discussed in DCD Section 9.2.1 and FSAR Section 10.4.5, respectively.

STD DEP 1.1-1

9.2.12 COMBINED LICENSE INFORMATION

9.2.12.1 Potable Water

VCS COL 9.2-1 This COL item is addressed in Subsections 9.2.5.2.1 and 9.2.5.3.

9.2.12.2 Waste Water Retention Basins

VCS COL 9.2-2 This COL item is addressed in Subsection 9.2.9.2.2.

STD DEP 1.1-1

9.2.13 REFERENCES

201. Westinghouse: Evaluation of Impacts: Change to Maximum Safety Non-Coincident Ambient Wet Bulb Temperature for the V.C. Summer Site, VSP_VSG_000706, June 30, 2010.

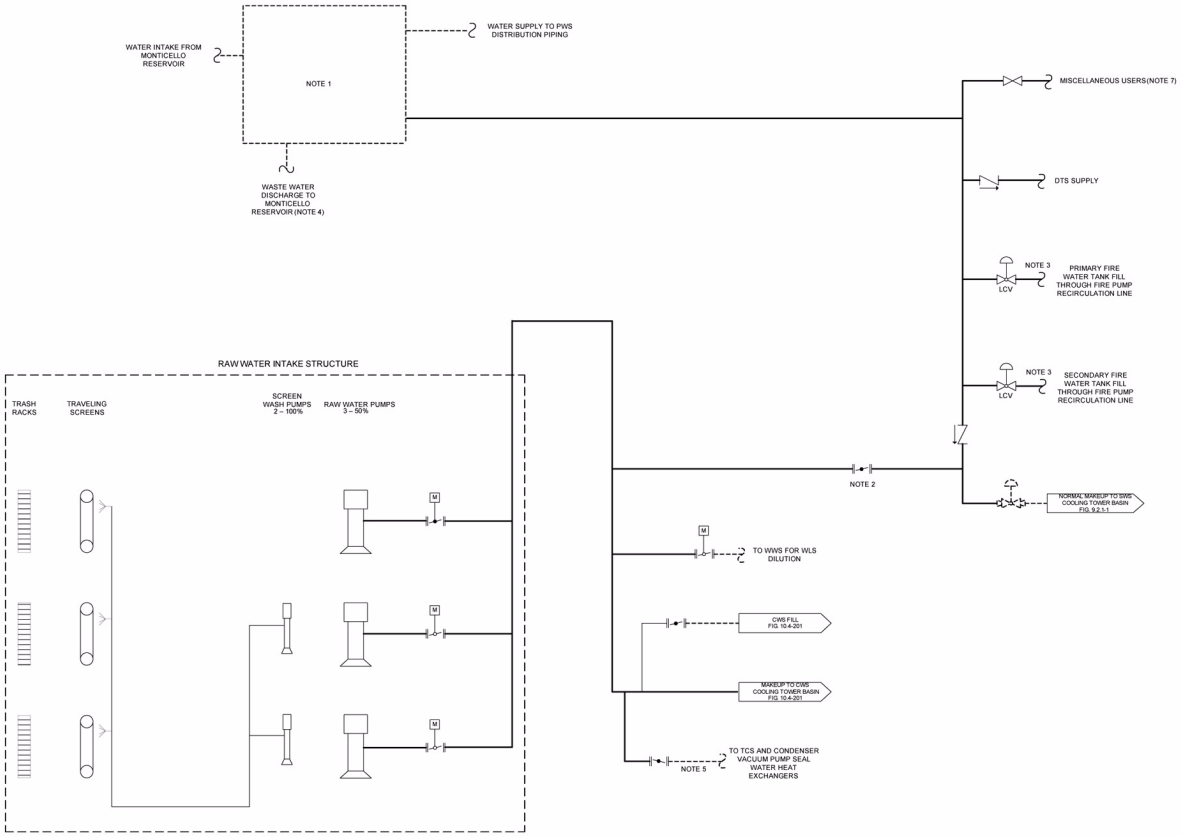

NOTES:

1. THE WATER TREATMENT FACILITY INCLUDES AN INTAKE STRUCTURE AND WATER TREATMENT PLANT. THE FACILITY CONTAINS EQUIPMENT(e.g., CLARIFIER, FILTERS, PUMPS, TANKS) AS NECESSARY TO WITHDRAW RAW WATER FROM MONTICELLO RESERVOIR AND PRETREAT, STORE AND TRANSFER RAW WATER AND POTABLE WATER FOR PLANT USE.
2. A NORMALLY ISOLATED CROSS-TIE IS PROVIDED TO PROVIDE UNFILTERED RAW WATER FOR SWS MAKEUP USING THE RAW WATER PUMPS
3. FILL AND MAKEUP FROM RWS TO FIRE WATER TANK IS THROUGH FIRE PUMP RECIRCULATION LINE NOZZLE
4. WASTE WATER FROM THE WATER TREATMENT FACILITY IS PROCESSED AS NEEDED AND RELEASED TO MONTICELLO RESERVOIR THROUGH THE UNIT 1 DISCHARGE CANAL
5. RAW WATER MAY BE USED FOR ALTERNATE COOLING OF THE TCS AND CONDENSER VACUUM PUMP SEAL WATER HEAT EXCHANGERS WHEN THE CWS IS NOT REQUIRED TO OPERATE AND HEAT REMOVAL REQUIREMENTS OF THE EXCHANGERS ARE LOW.
6. PROVISIONS ARE TO BE INCLUDED DOWNSTREAM OF THE RAW WATER PUMPS FOR INJECTION OF CHEMICALS AS REQUIRED TO CONTROL CORROSION, SCALING, AND BIOLOGICAL FOULING.
7. INCLUDES SUPPLY TO THE YFS. SEPARATE STORAGE CAPACITY IS PROVIDED FOR THE YFS

ABBREVIATIONS:

CWS	CIRCULATING WATER SYSTEM
DTS	DEMINERALIZED WATER TREATMENT SYSTEM
FPS	FIRE PROTECTION SYSTEM
LCV	LEVEL CONTROL VALVE
PWS	POTABLE WATER SYSTEM
SWS	SERVICE WATER SYSTEM
TCS	TURBINE BUILDING CLOSED COOLING WATER SYSTEM
WLS	LIQUID RADWASTE SYSTEM
WWS	WASTE WATER SYSTEM
YFS	YARD FIRE WATER SYSTEM

Figure 9.2-201. Raw Water System Flow Diagram

9.3 PROCESS AUXILIARIES

This section of the referenced DCD is incorporated by reference with the following departures and/or supplements:

9.3.7 COMBINED LICENSE INFORMATION

STD COL 9.3-1 This COL Item is addressed below.

Generic Issue 43, and the concerns of Generic Letter 88-14 and NUREG-1275 regarding degradation or malfunction of instrument air supply and safety-related valve failure, are addressed by the training and procedures for operations and maintenance of the instrument air subsystem and air-operated valves.

Plant systems, including the compressed and instrument air system, are maintained in accordance with procedures. Maintenance procedures are discussed in Subsection 13.5.2.2.6. The instrument air supply subsystem components are maintained and tested in accordance with manufacturers' recommendations and procedures. The safety-related air-operated valves are maintained in accordance with manufacturers' recommendations and tested in accordance with plant procedures to allow proper function on loss of air. The instrument air is periodically sampled and tested for compliance with the quality requirements of ANSI/ISA-S7.3-1981.

Operators are provided training on loss of instrument air in accordance with abnormal operating procedures. Plant systems, including the compressed and instrument air system, are operated in accordance with system operating procedures, abnormal operating procedures, and alarm response procedures which are written in accordance with Subsection 13.5.2. The training program for operations and maintenance personnel is discussed in Section 13.2.

9.4 AIR-CONDITIONING, HEATING, COOLING, AND VENTILATION SYSTEM

This section of the referenced DCD is incorporated by reference with the following departures and/or supplements.

9.4.1.1.1 Safety Design Basis

Add the following information to the end of DCD Subsection 9.4.1.1.1.

VCS COL 9.4-1b No toxic emergencies due to onsite and offsite sources of toxic chemicals have been identified.

9.4.1.2.3.1 Main Control Room/Control Support Area HVAC Subsystem

---

Add the following information to the end of DCD Subsection 9.4.1.2.3.1.

VCS COL 9.4-1b No toxic emergencies due to onsite and offsite sources of toxic chemicals have been identified.

9.4.1.4 Tests and Inspection

STD COL 9.4-1a Add the following text at the end of DCD Subsection 9.4.1.4.

The main control room / control support area HVAC subsystem of the nuclear island nonradioactive ventilation system (VBS) is tested and inspected in accordance with ASME/ANSI AG-1-1997 and Addenda AG-1a-2000 (Reference 201), ASME N509-1989, ASME N510-1989, and Regulatory Guide 1.140.

The VBS is tested as separate components and as an integrated system. Surveillance tests are performed to monitor the condition of the system. Testing methods include:

- Visual inspection
- Duct and housing leak tests

- Airflow capacity and distribution tests
- Air-aerosol mixing uniformity test
- HEPA filter bank and adsorber bank in-place leak tests
- Duct damper bypass tests
- System bypass tests
- Air heater performance tests
- Laboratory testing of adsorbers
- Ductwork inleakage test

Testing is performed at the frequency provided in Table 1 of ASME N510-1989.

9.4.7.4 Tests and Inspections

Add the following text at the end of DCD Subsection 9.4.7.4.

STD COL 9.4-1a The exhaust subsystem of the containment air filtration system (VFS) is tested and inspected in accordance with ASME/ANSI AG-1-1997 and Addenda AG-1a-2000 (Reference 201), ASME N509-1989, ASME N510-1989, and Regulatory Guide 1.140.

The VFS is tested as separate components and as an integrated system. Surveillance tests are performed to monitor the condition of the system. Testing methods include:

- Visual inspection
- Airflow capacity and distribution tests
- HEPA filter bank and adsorber bank in-place leak tests
- System bypass tests
- Air heater performance tests
- Laboratory testing of adsorbers
- Ductwork inleakage test

Testing is performed at the frequency provided in Table 1 of ASME N510-1989.

9.4.12 COMBINED LICENSE INFORMATION

STD COL 9.4-1a This COL Item is addressed in Subsections 9.4.1.4 and 9.4.7.4.

VCS COL 9.4-1b This COL item is discussed in Subsections 9.4.1.1.1 and 9.4.1.2.3.1.

9.4.13 REFERENCES

201. ASME/ANSI AG-1a-2000, Addenda to ASME AG-1-1997 Code on Nuclear Air and Gas Treatment, Section HA, “Housings.”

9.5 OTHER AUXILIARY SYSTEMS

This section of the referenced DCD is incorporated by reference with the following departures and/or supplements.

9.5.1.2.1.3 Fire Water Supply System

STD SUP 9.5-1 Add the following paragraph at the end of DCD Subsection 9.5.1.2.1.3.

Threads compatible with those used by the off-site fire department are provided on all hydrants, hose couplings and standpipe risers, or a sufficient number of thread adapters compatible with the off-site fire department are provided.

9.5.1.6 Personnel Qualification and Training

STD COL 9.5-1 Add the following paragraph at the end of DCD Subsection 9.5.1.6.

Subsections 9.5.1.8.2 and 9.5.1.8.7 summarize the qualification and training programs that are established and implemented for the Fire Protection Program.

STD DEP 1.1-1 Insert the following subsections after DCD Subsection 9.5.1.7. DCD Subsection 9.5.1.8 is renumbered as Subsection 9.5.1.9.

9.5.1.8 Fire Protection Program

STD COL 9.5-1 The fire protection program is established such that a fire does not prevent safe shutdown of the plant and does not endanger the health and safety of the public. Fire protection at the plant uses a defense-in-depth concept that includes fire prevention, detection, control and extinguishing systems and equipment, administrative controls and procedures, and trained personnel. These defense-in-depth principles are achieved by meeting the following objectives:

- Prevent fires from starting.
- Detect rapidly, control, and extinguish promptly those fires that do occur.

- Provide protection for structures, systems, and components important to safety so that a fire that is not promptly extinguished by the fire suppression activities does not prevent the safe shutdown of the plant.

- Minimize the potential for radiological releases.

9.5.1.8.1 Fire Protection Program Implementation

As indicated in Table 13.4-201, the required elements of the fire protection program are fully operational prior to receipt of new fuel for buildings storing new fuel and adjacent fire areas that could affect the fuel storage area in that reactor unit. Other required elements of the fire protection program described in this section are fully operational prior to initial fuel loading in that reactor unit.

Elements of the fire protection program are reviewed on a frequency established by procedures and updated as necessary.

9.5.1.8.1.1 Fire Protection Program Criteria

STD COL 9.5-3
STD COL 9.5-4

The fire protection program is based on the criteria of several industry and regulatory documents referenced in FSAR Subsection 9.5.5 and DCD Subsection 9.5.5, and also based on the guidance provided in Regulatory Guide 1.189. DCD Tables 9.5.1-1 and FSAR Table 9.5-201 provide a cross-reference to information addressing compliance with BTP CMEB 9.5-1. Exceptions to the National Fire Protection Association (NFPA) Standards beyond those included in DCD Table 9.5.1-3, and exceptions taken to the NFPA Standards listed in FSAR Subsection 9.5.5, are identified in FSAR Table 9.5-202.

9.5.1.8.1.2 Organization and Responsibilities

STD COL 9.5-1

The organizational structure of the fire protection personnel is discussed in Subsection 13.1.1.2.10.

The site executive in charge of the fire protection program, through the engineer in charge of fire protection, is responsible for the following:

a. Programs and periodic inspections are implemented to:

1. Minimize the amount of combustibles in safety-related areas.

2. Determine the effectiveness of housekeeping practices.

3. Provide for availability and acceptability of the following:

i. Fire protection system and components.

ii. Manual fire fighting equipment.

iii. Emergency breathing apparatus.

iv. Emergency lighting.

v. Portable communication equipment.

STD COL 9.5-8

STD COL 9.5-1

vi. Fire barriers including fire rated walls, floors and ceilings, fire rated doors, dampers, etc., fire stops and wraps, and fire retardant coating. Procedures address the administrative controls in place, including fire watches, when a fire area is breached for maintenance.

STD COL 9.5-1

4. Confirm prompt and effective corrective actions are taken to correct conditions adverse to fire protection and preclude their recurrence.

b. Conducting periodic maintenance and testing of fire protection systems, components, and manual fire fighting equipment, evaluating test results, and determining the acceptability of systems under test in accordance with established plant procedures.

c. Designing and selecting equipment related to fire protection.

d. Reviewing and evaluating proposed work activities to identify potential transient fire loads.

e. Managing the plant fire brigade, including:

1. Developing, implementing and administering the fire brigade training program.

2. Scheduling and conducting fire brigade drills.

3. Critiquing fire drills to determine if training objectives are met.

4. Performing a periodic review of the fire brigade roster and initiating changes as needed.

5. Maintaining the fire training program records for members of the fire brigade and other personnel.

6. Maintaining a sufficient number of qualified fire brigade personnel to respond to fire emergencies for each shift.

f. Developing and conducting the fire extinguisher training program.

g. Implementing a program for indoctrination of personnel gaining unescorted access to the protected area in appropriate procedures which implement the fire protection program, such as fire prevention and fire reporting procedures, plant emergency alarms, including evacuation.

h. Implementing a program for instruction of personnel on the proper handling of accidental events such as leaks or spills of flammable materials.

i. Preparing procedures to meet possible fire situations in the plant and for assuring assistance is available for fighting fires in radiological areas.

j. Implementing a program that utilizes a permit system that controls and documents inoperability of fire protection systems and equipment. This program initiates proper notifications and compensatory actions, such as fire watches, when inoperability of any fire protection system or component is identified.

k. Developing and implementing preventive maintenance, corrective maintenance, and surveillance test fire protection procedures.

l. Confirming that plant modifications, new procedures and revisions to procedures associated with fire protection equipment and systems that have significant impact on the fire protection program are reviewed by an individual who possesses the qualifications of a fire protection engineer.

m. Continuing evaluation of fire hazards during construction or modification of other units on the site. Special considerations, such as fire barriers, fire protection capability and administrative controls are provided as necessary to protect the operating unit(s) from construction or modification activities.

n. Establishing a fire prevention surveillance plan and training plant personnel on that plan.

o. Developing pre-fire plans and making them available to the fire brigade and control room.

VCS COL 9.5-1 The responsibilities of the engineer in charge of fire protection and his staff are discussed in Subsection 13.1.1.3.2.1.4.

STD COL 9.5-1 9.5.1.8.2 Fire Brigade

9.5.1.8.2.1 General

VCS COL 9.5-1 The organization of the fire brigade is discussed in Subsection 13.1.2.4.

STD COL 9.5-1 To qualify as a member of the fire brigade, an individual must meet the following criteria:

a. Has attended the required training sessions for the position occupied on the fire brigade.

b. Has passed an annual physical exam including demonstrating the ability for performing strenuous activity and the use of respiratory protection.

9.5.1.8.2.2 Fire Brigade Training

A training program is established so that the capability to fight fires is developed and documented. The program consists of classroom instruction supplemented with periodic classroom retraining, practice in fire fighting, and fire drills. Classroom instruction and training is conducted by qualified individuals knowledgeable in fighting the types of fires that could occur within the plant and its environs and using on-site fire fighting equipment. Individual records of training provided to each fire brigade member, including drill critiques, are maintained as part of the permanent plant files for at least three years to document that each member receives the required training.

The fire brigade leader and at least two brigade members per shift have sufficient training and knowledge of plant safety-related systems to understand the effects of fire and fire suppressants on safe shutdown capability.

Personnel assigned as fire brigade members receive formal training prior to assuming brigade duties. The course subject matter is selected to satisfy the requirements of Regulatory Guide 1.189. Course material selection also includes guidance from NFPA 600 (Reference 204) and 1500 (Reference 210) as appropriate. Additional training may also include material selected from NFPA 1404 (Reference 208) and 1410 (Reference 209).

The minimum equipment provided for the fire brigade consists of personal protective equipment such as turnout coats, boots, gloves, hard hats, emergency communications equipment, portable lights, portable ventilation equipment and portable extinguishers. Self-contained breathing apparatus (SCBA) approved by NIOSH, using full face positive pressure masks, and providing an operating life of at least 30 minutes, are provided for selected fire brigade, emergency repair and control room personnel. At least ten masks are provided for fire brigade

personnel. At least two extra air bottles, each with at least 30 minutes of operating life, are located on-site for each SCBA. An additional on-site 6-hour supply of reserve air is provided to permit quick and complete replenishment of exhausted supply air bottles. DCD Subsection 6.4.2.3 discusses the portable breathing apparatus for control room personnel. Additional SCBAs are provided near the personnel containment entrance for the exclusive use of the fire brigade. The fire brigade leader has ready access to keys for any locked fire doors.

VCS COL 9.5-1 The on-duty shift supervisor has responsibility for taking certain actions based on an assessment of the magnitude of the fire emergency. These actions include safely shutting down the plant, making recommendations for implementing the Emergency Plan, notification of emergency personnel and requesting assistance from off-duty personnel, if necessary. Emergency Plan consideration of fire emergencies includes the guidance of Regulatory Guide 1.101.

STD COL 9.5-1 9.5.1.8.2.2.1 Classroom Instruction

Fire brigade members receive classroom instruction in fire protection and fire fighting techniques prior to qualifying as members of the fire brigade. This instruction includes:

a. Identification of the types of fire hazards along with their location within the plant and its environs.

b. Identification of the types of fires that could occur within the plant and its environs.

c. Identification of the location of on-site fire fighting equipment and familiarization with the layout of the plant including ingress and egress routes to each area.

d. The proper use of on-site fire fighting equipment and the correct method of fighting various types of fires including at least the following:

- fires involving radioactive materials
- fires in energized electrical equipment
- fires in cables and cable trays
- fires involving hydrogen
- fires involving flammable and combustible liquids or hazardous process chemicals

– fires resulting from construction or modifications (welding)

– fires involving record files

e. Review of each individual's responsibilities under the Fire Protection Program.

f. Proper use of communication, lighting, ventilation, and emergency breathing equipment.

g. Fire brigade leader direction and coordination of fire fighting activities.

h. Toxic and radiological characteristics of expected combustion products.

i. Proper methods of fighting fires inside buildings and confined spaces.

j. Detailed review of fire fighting strategies, procedures and procedure changes.

k. Indoctrination of the plant fire fighting plans, identification of each individual's responsibilities, and review of changes in the fire fighting plans resulting from fire protection-related plant modifications.

l. Coordination between the fire brigade and off-site fire departments that have agreed to assist during a major fire on-site is provided to establish responsibilities and duties. Educating the off-site organization in operational precautions when fighting fires on nuclear power plant sites, and awareness of special hazards and the need of radiological protection of personnel.

9.5.1.8.2.2.2 Retraining

Classroom refresher training is scheduled on a biennial basis to supplement retention of the initial training. These sessions may be concurrent with the regular planned meetings.

9.5.1.8.2.2.3 Practice

Practice sessions are held for each fire brigade and for each fire brigade member on the proper method of fighting various types of fires which might occur in the plant. These sessions are scheduled on an annual basis and provide brigade members with team experience in actual fire fighting and the use of emergency breathing apparatus under strenuous conditions encountered in fire fighting.

9.5.1.8.2.2.4 Drills

Fire brigade drills are conducted at least once per calendar quarter for each shift. Each fire brigade member participates in at least two drills annually. Drills are either announced or unannounced. At least one unannounced drill is held

annually for each shift fire brigade. At least one drill is performed annually on a "back shift" for each shift's fire brigade. The drills provide for off-site fire department participation at least annually. Triennially, a randomly selected, unannounced drill shall be conducted and critiqued by qualified individuals independent of the plant staff. Training objectives are established prior to each drill and reviewed by plant management. Drills are critiqued on the following points:

a. Assessment of fire alarm effectiveness.

b. Assessment of time required to notify and assemble the fire brigade.

c. Assessment of the selection, placement and use of equipment.

d. Assessment of the fire brigade leader's effectiveness in directing the fire fighting effort.

e. Assessment of each fire brigade member's knowledge of fire fighting strategy, procedures and simulated use of equipment.

f. Assessment of the fire brigade's performance as a team.

Performance deficiencies identified, based on these assessments, are used as the basis for additional training and repeat drills. Unsatisfactory drill performance is followed by a repeat drill within 30 days.

9.5.1.8.2.2.5 Meetings

Regular planned meetings are held at least quarterly for the fire brigade members to review changes in the Fire Protection Program and other subjects as necessary.

9.5.1.8.3 Administrative Controls

Administrative controls for the Fire Protection Program are implemented through plant administrative procedures. Applicable industry publications are used as guidance in developing those procedures.

Administrative controls include procedures to:

a. Control actions to be taken by an individual discovering a fire, such as notification of the control room, attempting to extinguish the fire, and actuation of local fire suppression systems.

VCS COL 9.5-1 b. Control actions to be taken by the control room operator, such as sounding fire alarms, and notifying the shift supervisor of the type, size and location of the fire.

STD COL 9.5-1

c. Control actions to be taken by the fire brigade after notification of a fire, including location to assemble, directions given by the fire brigade leader, the responsibilities of brigade members, such as selection of fire fighting and protective equipment, and use of preplanned strategies for fighting fires in specific areas.

d. Control actions to be taken by the security force upon notification of a fire.

e. Define the strategies established for fighting fires in safety-related areas and areas presenting a hazard to safety-related equipment, including the designation of the:

1. Fire hazards in each plant area/zone covered by a fire fighting procedure (pre-fire plan). Pre-fire plans utilize the guidance of NFPA 1620 (Reference 205).

2. Fire extinguishers best suited for controlling fires with the combustible loadings of each zone and the nearest location of these extinguishers.

3. Most favorable direction from which to attack a fire in each area in view of the ventilation direction, access hallways, stairs, and doors that are most likely to be free of fire, and the best station or elevation for fighting the fire. Access and egress routes that involve locked doors are specifically identified in the procedure with the appropriate precautions and methods for access specified.

4. Plant systems that should be managed to reduce the damage potential during a local fire and the location of local and remote controls for such management (e.g., any hydraulic or electrical system in the zone covered by the specific fire fighting procedure that could increase the hazards in the area because of overpressurization or electrical hazards).

5. Vital heat-sensitive system components that need to be kept cool while fighting a local fire. Particularly hazardous combustibles that need cooling are designated.

6. Potential radiological and toxic hazards in fire zones.

7. Ventilation system operation that provides desired plant air distribution when the ventilation flow is modified for fire containment or smoke clearing operations.

VCS COL 9.5-1

8. Operations requiring control room and shift supervisor coordination or authorization.

STD COL 9.5-1

9. Instructions for plant operators and other plant personnel during a fire.

f. Organize the fire brigade and assign special duties according to job title so that the fire fighting functions are covered for each shift by personnel trained and qualified to perform these functions. These duties include command control of the brigade, transporting fire suppression and support equipment to the fire scenes, applying the extinguishing agent to the fire, communication with the control room, and coordination with off-site fire departments.

9.5.1.8.4 Control of Combustible Materials, Hazardous Materials and Ignition Sources

The control of combustible materials is defined by administrative procedures. These procedures impose the following controls:

a. Prohibit the storage of combustible materials (including unused ion exchange resins) in areas that contain or expose safety-related equipment.

b. Govern the handling of and limit transient fire loads such as flammable liquids, wood and plastic materials in buildings containing safety-related systems or equipment.

c. Assign responsibility to the appropriate supervisor for reviewing work activities to identify transient fire loads.

d. Govern the use of ignition sources by use of a flame permit system to control welding, flame cutting, grinding, brazing and soldering operations, and temporary electrical power cables. A separate permit is issued for each area where such work is done. If work continues over more than one shift, the permit is valid for not more than 24 hours when the plant is operating or for the duration of a particular job during plant shutdown. NFPA 51B (Reference 202) and 241 (Reference 203) are used as guidance.

e. Minimize waste, debris, scrap, and oil spills or other combustibles resulting from a work activity in the safety-related area while work is in progress and remove the same upon completion of the activity or at the end of each work shift.

f. Govern periodic inspections for accumulation of combustibles for continued compliance with these administrative controls.

g. Prohibit the storage of acetylene-oxygen and other compressed gasses in areas that contain or expose safety-related equipment or the fire protection system that serves those areas. A permit system is required to control the use of this equipment in safety-related areas of the plant.

h. Govern the use and storage of hazardous chemicals in areas that contain or expose safety-related equipment.

i. Control the use of specific combustibles in safety-related areas. Wood used in safety-related areas during maintenance, modification, or refueling operation (such as lay-down blocks or scaffolding) is treated with a flame retardant in accordance with NFPA 703 (Reference 207). Use of wood inside buildings containing systems or equipment important to safety is only permitted when suitable noncombustible substitutes are not available. Equipment or supplies (such as new fuel) shipped in untreated combustible packing containers are unpacked in safety-related areas if required for valid operating reasons. However, combustible materials are removed from the area immediately following unpacking. Such transient combustible material, unless stored in approved containers, is not left unattended during lunch breaks, shift changes, or other similar periods. Loose combustible packing material, such as wood or paper excelsior, or polyethylene sheeting, is placed in metal containers with tight-fitting self-closing metal covers. Only noncombustible panels or flame-retardant tarpaulins or approved materials of equivalent fire-retardant characteristics are used. Any other fabrics or plastic films used are certified to conform to the large-scale fire test described in NFPA 701 (Reference 206).

j. Govern the control of electrical appliances in areas that contain or expose safety-related equipment.

9.5.1.8.5 Control of Radioactive Materials

The plant is designed with provisions for sampling of liquids resulting from fire emergencies that may contain radioactivity and may be released to the environment. Plant operating procedures require such liquids to be collected, sampled, and analyzed prior to discharge. Liquid discharges are required to be below activity limits prior to discharge.

9.5.1.8.6 Testing and Inspection

Testing and inspection requirements are imposed through administrative procedures. Maintenance or modifications to the fire protection system are subject to inspection for conformation to design requirements. Procedures governing the inspection, testing, and maintenance of fire protection alarm and detection systems, and water-based suppression and supply systems, utilize the guidance of NFPA 72 (DCD Reference 9.5.5.2) and NFPA 25 (Reference 212). Installation of portions of the system where performance cannot be verified through pre-operational tests, such as penetration seals, fire retardant coatings, cable routing, and fire barriers are inspected. Inspections are performed by individuals

knowledgeable of fire protection design and installation requirements. Open flame or combustion-generated smoke is not used for leak testing or similar procedures such as air flow determination. Inspection and testing procedures address the identification of items to be tested or inspected, responsible organizations for the activity, acceptance criteria, documentation requirements and sign-off requirements.

Fire protection materials subject to degradation (such as fire stops, seals and fire retardant coatings are visually inspected periodically for degradation or damage. Fire hoses are hydrostatically tested in accordance with NFPA 1962 (Reference 201). Hoses stored in outside hose stations are tested annually and interior standpipe hoses are tested every three years.

The fire protection system is periodically tested in accordance with plant procedures. Testing includes periodic operational tests and visual verification of damper and valve positions. Fire doors and their closing and latching mechanisms are also included in these procedures.

STD COL 9.5-6 The preoperational testing program describes the procedures for confirming that the as-installed configuration of fire barriers matches the tested configurations. The procedures describe the process for identifying and dispositioning deviations.

STD COL 9.5-1 9.5.1.8.7 Personnel Qualification and Training

VCS COL 9.5-1 The engineer in charge of fire protection is responsible for the formulation and implementation of the fire protection program and meets the qualification requirements listed in FSAR Subsection 13.1.1.3.2.1.4.

STD COL 9.5-1 Qualification and training of other plant personnel involved in the fire protection program is governed by plant qualification procedures and is conducted by personnel qualified by training and experience in these areas. These classifications include training personnel, maintenance personnel assigned to work on the fire protection system, and operations personnel assigned to system operation and testing.

9.5.1.8.8 Fire Doors

STD COL 9.5-3 Fire doors separating safety-related areas are self-closing or provided with closing mechanisms and are inspected semiannually to verify that the automatic hold

open, release and closing mechanisms and latches are operable. Watertight and missile resistant doors are not provided with closing mechanisms. Fire doors with automatic hold open and release mechanisms are inspected daily to verify that the doorways are free of obstructions.

Fire doors separating safety-related areas are normally closed and latched. Fire doors that are locked closed are inspected weekly to verify position. Fire doors that are closed and latched are inspected daily to assure that they are in the closed position. Fire doors that are closed and electrically supervised at a continuously manned location are not inspected.

9.5.1.8.9 Emergency Planning

Emergency planning is described in Section 13.3.

STD DEP 1.1-1

9.5.1.9 Combined License Information

9.5.1.9.1 Qualification Requirements for Fire Protection Program

STD COL 9.5-1 This COL Item is addressed as follows:

Qualification requirements for individuals responsible for development of the Fire Protection Program are discussed in Subsections 9.5.1.6 and 9.5.1.8.7.

Training of firefighting personnel is discussed in Subsections 9.5.1.8, 9.5.1.8.2 and 9.5.1.8.7.

Administrative procedures and controls governing the Fire Protection Program during plant operation are discussed in Subsections 9.5.1.8.1.2, 9.5.1.8.3, 9.5.1.8.4, 9.5.1.8.5, and 9.5.1.8.6.

Fire protection system maintenance is discussed in Subsection 9.5.1.8.6.

9.5.1.9.2 Fire Protection Analysis Information

VCS COL 9.5-2 This COL Item is addressed in Subsection 9A.3.3.

9.5.1.9.3 Regulatory Conformance

STD COL 9.5-3 This COL Item is addressed in Subsections 9.5.1.8.1.1, 9.5.1.8.8, and 9.5.1.8.9 and in Table 9.5-201.

9.5.1.9.4 NFPA Exceptions

STD COL 9.5-4 This COL item is addressed in Subsection 9.5.1.8.1.1.

9.5.1.9.6 Verification of Field Installed Fire Barriers

STD COL 9.5-6 This COL Item is addressed in Subsection 9.5.1.8.6.

9.5.1.9.7 Establishment of Procedures to Minimize Risk for Fire Areas Breached During Maintenance

STD COL 9.5-8 This COL item is addressed in Subsection 9.5.1.8.1.2.

9.5.2.5 Combined License Information

9.5.2.5.1 Offsite Interfaces

VCS COL 9.5-9 The Emergency Notification System (ENS) and the Emergency Response Data System (ERDS) are both powered normally by the 120V-ac power system. In the event of a loss of the ac power system, the systems are automatically switched over to the diesel backed, non-Class 1E dc and uninterruptable power supply systems.

Additional information regarding emergency communication systems can be found in Part 2, Section F "Emergency Communications" of the Emergency Plan.

9.5.2.5.2 Emergency Offsite Communications

VCS COL 9.5-10 The primary system used for communication with state and county officials during an emergency is the Electric Switch System Exchange (ESSX). VCSNS employs additional backup communication systems to the ESSX system including the use of the Private Branch Exchange (PBX) telephone system, local commercial telephone system, satellite telephones, and an 800 MHz radio system. In the event of the failure of one of the primary systems, the communicator manually initiates communications using one of the backup systems as described in the

Emergency Implementing Procedures. The Implementing Procedures provide the details for the communications transfer should the primary equipment fail or otherwise be determined to be unacceptable. The 800 MHz system serves as the crisis management radio system between VCSNS onsite teams and state and county officials. Details of the primary and secondary communication systems are provided in Section F of the VCSNS Emergency Plan.

9.5.2.5.3 Security Communications

VCS COL 9.5-11 This COL Item is addressed in Section 11 “Communications” of the Physical Security Plan.

Add the following subsection after DCD Subsection 9.5.4.5.1.

9.5.4.5.2 Fuel Oil Quality

STD COL 9.5-13 The diesel fuel oil testing program requires testing both new fuel oil and stored fuel oil. High fuel oil quality is provided by specifying the use of ASTM Grade 2D fuel oil with a sulfur content as specified by the engine manufacturer.

A fuel sample is analyzed prior to addition of ASTM Grade 2D fuel oil to the storage tanks. The sample moisture content and particulate or color is verified per ASTM D4176. In addition, kinetic viscosity is tested to be within the limits specified in Table 1 of ASTM D975. The remaining critical parameters per Table 1 of ASTM D975 are verified compliant within 7 days.

Fuel oil quality is verified by sample every 92 days to meet ASTM Grade 2D fuel oil criteria. The addition of fuel stabilizers and other conditioners is based on sample results.

The fuel oil storage tanks are inspected on a monthly basis for the presence of water. Any accumulated water is to be removed.

9.5.4.7 Combined License Information

9.5.4.7.2 Fuel Degradation Protection

STD COL 9.5-13 This COL Item is addressed in Subsection 9.5.4.5.2.

9.5.5 REFERENCES

201. National Fire Protection Association, “Standard for Inspection, Care, and Use of Fire Hose, Couplings, and Nozzles and the Service Testing of Fire Hose,” NFPA 1962, 2003.

202. National Fire Protection Association, “Standard for Fire Prevention During Welding, Cutting, and Other Hot Work,” NFPA 51B, 2003.

203. National Fire Protection Association, “Standard for Safeguarding Construction, Alteration, and Demolition Operations,” NFPA 241, 2004.

204. National Fire Protection Association, “Standard on Industrial Fire Brigades,” NFPA 600, 2005.

205. National Fire Protection Association, “Recommended Practice for Pre-incident Planning,” NFPA 1620, 2003.

206. National Fire Protection Association, “Standard Methods of Fire Tests for Flame Propagation of Textiles and Films,” NFPA 701, 2004.

207. National Fire Protection Association, “Standard for Fire-Retardant Treated Wood and Fire-Retardant Coatings for Building Materials,” NFPA 703, 2006.

208. National Fire Protection Association, “Standard for Fire Service Respiratory Protection Training,” NFPA 1404, 2006.

209. National Fire Protection Association, “Standard on Training for Initial Emergency Scene Operations,” NFPA 1410, 2005.

210. National Fire Protection Association, “Standard on Fire Department Occupational Safety and Health Program,” NFPA 1500, 2007.

211. National Fire Protection Association, “Standard for Fire Protection for Advanced Light Water Reactor Electric Generating Plants,” NFPA 804, 2001.

212. National Fire Protection Association, “Standard for the Inspection, Testing, and Maintenance of Water-Based Fire Protection Systems,” NFPA 25, 2008.

STD COL 9.5-3
STD COL 9.5-4

Table 9.5-201[a] (Sheet 1 of 7)
AP1000 Fire Protection Program Compliance with BTP CMEB 9.5-1

	BTP CMEB 9.5-1 Guideline	Paragraph	Comp	Remarks
	Fire Protection Program			
	1. Direction of fire protection program; availability of personnel.	C.1.a(1)	C	Comply. Subsections 9.5.1.8.1.2 and 13.1.1.2.10 address this requirement.
	2. Defense-in-depth concept; objective of fire protection program.	C.1.a(2)	C	Comply. Subsections 9.5.1.8 and 9.5.1.8.1 address this requirement.
VCS COL 9.5-3 VCS COL 9.5-4	3. Management responsibility for overall fire protection program; delegation of responsibility to staff.	C.1.a(3)	C	Comply. Subsections 9.5.1.8.1.2, 13.1.1.3.2.1.4 and 13.1.1.2.10
	4. The staff should be responsible for:	C.1.a(3)	C	Comply. Subsection 13.1.1.3.2.1.4 addresses this requirement.
STD COL 9.5-3 STD COL 9.5-4	a. Fire protection program requirements.			
	b. Post-fire shutdown capability.			
	c. Design, maintenance, surveillance, and quality assurance of fire protection features.			
	d. Fire prevention activities.			
	e. Fire brigade organization and training.			
	f. Prefire planning.			

STD COL 9.5-3
STD COL 9.5-4

Table 9.5-201[(a)] (Sheet 2 of 7)
AP1000 Fire Protection Program Compliance with BTP CMEB 9.5-1

		BTP CMEB 9.5-1 Guideline	Paragraph	Comp	Remarks
VCS COL 9.5-3 VCS COL 9.5-4	5.	The organizational responsibilities and lines of communication pertaining to fire protection should be defined through the use of organizational charts and functional descriptions.	C.1.a(4)	C	Comply. Organization and lines of communication are addressed in Figure 13,1-201. Functional descriptions are addressed in Subsections 13.1.1.2.10 13.1.1.3.1.4, 13.1.1.3.2.1.4, and 13.1.2.4.
	6.	Personnel qualification requirements for fire protection engineer, reporting to the position responsible for formulation and implementation of the fire protection program.	C.1.a(5)(a)	C	Comply. Subsection 13.1.1.3.2.1.4 addresses this requirement.
STD COL 9.5-3 STD COL 9.5-4	7.	The fire brigade members' qualifications should include a physical examination for performing strenuous activity, and the training described in Position C.3.d.	C.1.a(5)(b)	C	Comply. Subsections 9.5.1.8.2.1 and 9.5.1.8.2.2 addresses this requirement.
	8.	The personnel responsible for the maintenance and testing of the fire protection systems should be qualified by training and experience for such work.	C.1.a(5)(c)	C	Comply. Subsection 9.5.1.8.7 addresses this requirement.
	9.	The personnel responsible for the training of the fire brigade should be qualified by training and experience for such work.	C.1.a(5)(d)	C	Comply. Subsection 9.5.1.8.2.2 addresses this requirement.
	10.	The following NFPA publications should be used for guidance to develop the fire protection program: No. 4, No. 4A, No. 6, No. 7, No. 8, and No. 27.	C.1.a(6)	C	Alternate Compliance. The NFPA codes cited in BTP CMEB 9.5-1 are historical. Current NFPA codes are referenced for guidance for the fire protection program. Subsection 9.5.1.8.1.1 addresses this requirement.

STD COL 9.5-3
STD COL 9.5-4

Table 9.5-201[a] (Sheet 3 of 7)
AP1000 Fire Protection Program Compliance with BTP CMEB 9.5-1

BTP CMEB 9.5-1 Guideline		Paragraph	Comp	Remarks
11.	On sites where there is an operating reactor, and construction or modification of other units is underway, the superintendent of the operating plant should have a lead responsibility for site fire protection.	C.1.a(7)	C	Comply. Subsection 13.1.1.2.10 addresses this requirement.
Fire Protection Analysis				
14.	Fires involving facilities shared between units should be considered.	C.1.b	C	Comply. The FHA demonstrates the plant's ability to perform safe shutdown functions and minimize radioactive releases to the environment. Postulated fires in shared facilities that do not contain SSCs important to safety and do not contain radioactive materials do not affect these functions.
15.	Fires due to man-made site-related events that have a reasonable probability of occurring and affecting more than one reactor unit should be considered.	C.1.b	C	Comply. Subsections 2.2.3 and 3.5 establish that these events are not credible.
Fire Suppression System Design Basis				
22.	Fire protection systems should retain their original design capability for potential man-made, site-related events that have a reasonable probability of occurring at a specific plant site.	C.1.c(4)	C	Comply. Subsections 2.2.3 and 3.5 establish that these events are not credible.
Fire Protection Program Implementation				
26.	The fire protection program for buildings storing new reactor fuel and for adjacent fire areas that could affect the fuel storage area should be fully operational before fuel is received at the site.	C.1.e(1)	C	Comply. Subsection 9.5.1.8.1 addresses this requirement.

STD COL 9.5-3
STD COL 9.5-4

Table 9.5-201[a] (Sheet 4 of 7)
AP1000 Fire Protection Program Compliance with BTP CMEB 9.5-1

	BTP CMEB 9.5-1 Guideline		Paragraph	Comp	Remarks
	27.	The fire protection program for an entire reactor unit should be fully operational prior to initial fuel loading in that unit.	C.1.e(2)	C	Comply. Subsection 9.5.1.8.1 addresses this requirement.
	28.	Special considerations for the fire protection program on reactor sites where there is an operating reactor and construction or modification of other units is under way.	C.1.e(3)	C	Comply. Subsection 9.5.1.8.1.2.m addresses this requirement.
	29.	Establishing administrative controls to maintain the performance of the fire protection system and personnel.	C.2	C	Comply. Subsection 9.5.1.8.1.2 addresses this requirement.
	Fire Brigade				
	30.	The guidance in Regulatory Guide 1.101 should be followed as applicable.	C.3.a	C	Comply. Subsection 9.5.1.8.2.2 addresses this requirement.
VCS COL 9.5-3 VCS COL 9.5-4	31.	Establishing site brigade: minimum number of fire brigade members on each shift; qualification of fire brigade members; competence of brigade leader.	C.3.b	C	Comply. Subsection 9.5.1.8.2.2 and 13.1.2.4 address this requirement.
STD COL 9.5-3 STD COL 9.5-4	32.	The minimum equipment provided for the brigade should consist of turnout coats, boots, gloves, hard hats, emergency communications equipment, portable ventilation equipment, and portable extinguishers.	C.3.c	C	Comply. Subsection 9.5.1.8.2.2 addresses this requirement.
	33.	Recommendations for breathing apparatus for fire brigade, damage control, and control room personnel.	C.3.c	C	Comply. Subsection 9.5.1.8.2.2 and DCD Subsection 6.4.3.1 address these requirements.
	34.	Recommendations for the fire brigade training program.	C.3.d	C	Comply. Subsection 9.5.1.8.2.2 addresses this requirement.

STD COL 9.5-3
STD COL 9.5-4

Table 9.5-201[a] (Sheet 5 of 7)
AP1000 Fire Protection Program Compliance with BTP CMEB 9.5-1

	BTP CMEB 9.5-1 Guideline	Paragraph	Comp	Remarks
Quality Assurance Program				
35.	Establishing quality assurance (QA) programs by applicants and contractors for the fire protection systems for safety-related areas; identification of specific criteria for quality assurance programs.	C.4	C	Comply. DCD Subsection 9.5.1.7 and Chapter 17 address this requirement.
Building Design				
50.	Fire doors should be inspected semiannually to verify that automatic hold-open, release, and closing mechanisms and latches are operable.	C.5.a (5)	C	Comply. Subsection 9.5.1.8.8 addresses this requirement.
51.	Alternative means for verifying that fire doors protect the door opening as required in case of fire.	C.5.a (5)	C	Comply. Subsection 9.5.1.8.8 addresses this requirement.
52.	The fire brigade leader should have ready access to keys for any locked fire doors.	C.5.a (5)	C	Comply. Subsection 9.5.1.8.2.2 addresses this requirement.
55.	Stairwells serving as escape routes, access routes for firefighting, or access routes to areas containing equipment necessary for safe shutdown should be enclosed in masonry or concrete towers with a minimum fire resistance rating of 2 hours and self-closing Class B fire doors.	C.5.A (6)	C	Comply. Subsection 9A.3.3 addresses this requirement for miscellaneous buildings located in the yard.
56.	Fire exit routes should be clearly marked.	C.5.a (7)	C	Comply. DCD Subsection 9.5.1.2.1.1 addresses this requirement.
71.	Water drainage from areas that may contain radioactivity should be collected, sampled, and analyzed before discharge to the environment.	C.5.a(14)	C	Comply. Capability is provided. Subsection 9.5.1.8.5 addresses this requirement.

STD COL 9.5-3
STD COL 9.5-4

Table 9.5-201[a] (Sheet 6 of 7)
AP1000 Fire Protection Program Compliance with BTP CMEB 9.5-1

BTP CMEB 9.5-1 Guideline		Paragraph	Comp	Remarks
Control of Combustibles				
80.	Use of compressed gases inside buildings should be controlled.	C.5.d (2)	C	Comply. Subsection 9.5.1.8.4.g addresses this requirement.
Lighting and Communication				
111.	A portable radio communications system should be provided for use by the fire brigade and other operations personnel required to achieve safe plant shutdown.	C.5.g (4)	C	Comply. Subsections 9.5.1.8.1.2.a.3.v, 9.5.1.8.2.2, and DCD Subsections 9.5.2 and 9.5.2.2.1 address this requirement.
Water Sprinkler and Hose Standpipe Systems				
149.	All valves in the fire protection system should be periodically checked to verify position.	C.6.c (2)	C	Comply. Subsection 9.5.1.8.6 addresses this requirement.
157.	The fire hose should be hydrostatically tested in accordance with NFPA 1962. Hoses stored in outside hose houses should be tested annually. The interior standpipe hose should be tested every 3 years.	C.6.c (6)	C	Comply. Subsection 9.5.1.8.6 addresses this requirement.
Primary and Secondary Containment				
174.	Self-contained breathing apparatus should be provided near the containment entrances for fire fighting and damage control personnel. These units should be independent of any breathing apparatus provided for general plant activities.	C.7.a (2)	C	Comply. Subsection 9.5.1.8.2.2 addresses this requirement.
Main Control Room Complex				
180.	Breathing apparatus for main control room operators should be readily available.	C.7.b	C	Comply. DCD Subsection 6.4.2.3 addresses this requirement.

STD COL 9.5-3
STD COL 9.5-4

Table 9.5-201[a] (Sheet 7 of 7)
AP1000 Fire Protection Program Compliance with BTP CMEB 9.5-1

	BTP CMEB 9.5-1 Guideline	Paragraph	Comp	Remarks
Cooling Towers				
225.	Cooling towers should be of noncombustible construction or so located and protected that a fire will not adversely affect any safety-related systems or equipment.	C.7.q	C	Comply. Subsection 9A.3.3 addresses this requirement.
Storage of Acetylene-Oxygen Fuel Gases				
228.	Gas cylinder storage locations should not be in areas that contain or expose safety-related equipment or the fire protection systems that serve those safety-related areas.	C.8.a	C	Comply. Subsection 9.5.1.8.4.g addresses this requirement.
229.	A permit system should be required to use this equipment in safety-related areas of the plant.	C.8.a	C	Comply. Subsection 9.5.1.8.4.g addresses this requirement.
Storage Areas for Ion Exchange Resins				
230.	Unused ion exchange resins should not be stored in areas that contain or expose safety-related equipment.	C.8.b	C	Comply. Subsection 9.5.1.8.4.a addresses this requirement.
Hazardous Chemicals				
231.	Hazardous chemicals should not be stored in areas that contain or expose safety-related equipment.	C.8.c	C	Comply. Subsection 9.5.1.8.4.h addresses this requirement.

a) This table supplements DCD Table 9.5.1-1.

STD COL 9.5-4

Table 9.5-202[a]
Exceptions to NFPA Standard Requirements

Requirement	AP1000 Exception or Clarification
NFPA 804 (Reference 211) contains requirements specific to light water reactors.	Compliance with portions of this standard is as identified within DCD Section 9.5.1 and WCAP-15871. The intake structure is non-combustible construction, does not provide any safety function, and does not contain any equipment important to safety. Automatic sprinkler protection is not warranted and is not provided.

a) This table supplements DCD Table 9.5.1-3.

APPENDIX 9A
FIRE PROTECTION ANALYSIS

This section of the referenced DCD is incorporated by reference with the following departures and/or supplements.

9A.3.3 Yard Area and Outlying Buildings

VCS COL 9.5-2 Miscellaneous yard areas, equipment, or structures that do not contain safety-related systems or components, or radioactive materials, are located so they will not present a hazard from fire or smoke to any safety-related structures, systems, or equipment located on site.

The fire protection provided for these yard areas, outlying buildings, structures, or equipment will comply with building code, fire code, and NFPA requirements. A final fire hazards analysis based on final design and purchased materials will be completed before receipt of fuel on site.

9A.3.3.1 CWS Cooling Towers

The CWS for each unit incorporates two counterflow, clustered-plume, round mechanical draft cooling towers. The structures are approximately 270 feet in diameter and 70 feet tall. The cooling towers are generally of noncombustible concrete construction, with combustible polyvinyl chloride fill and drift eliminator and fire-retardant glass reinforced polyester plenum partitions and fan shroud/ stack. Fan blades are of polyester and fiberglass composite. Each tower incorporates 16 motor-driven fans, complete with gear reducers. Each fan unit is supplied with an industrial grade lubrication line, terminating outside the fan shroud/stack near the motor. The lubrication system includes an oil level sight glass and drain for maintenance.

The design and materials of construction conform to FM requirements for FM-approved towers found to be of low fire hazard not requiring automatic sprinkler protection for insurance purposes. Outdoor yard hydrants are located near the cooling towers for manual firefighting.

The cooling towers are located away from safety-related plant areas such that a tower fire or structural failure resulting in their collapse will not damage equipment, components, or structures required for safe shutdown of the plant.

9A.3.3.2 CWS Intake Structures

The CWS for each unit incorporates an open concrete intake structure located outdoors between the two respective mechanical draft cooling towers serving the unit. The intake structure is comprised of an open flume from the cooling tower

basins, removable course and fine screens for debris control, and three circulating water pump bays. Each of the three circulating water pumps is rated for 33-1/3% capacity and provides flow to the condensers.

Each intake structure incorporates a single-story service building to house switchgear and related equipment required for operation of the cooling towers, the screens, and circulating water pumps. The building is of noncombustible unprotected construction and measures approximately 1,400 ft^2 in area. The combustible loading is estimated to be less than one hour (<80,000 Btu/ft^2), the major contributor being cable insulation.

The building incorporates a fire alarm system comprised of automatic fire detection, manual pull stations, and audible alarm notification appliances in accordance with Appendix 9A.2.4 for combustible loadings up to 80,000 Btu/ft^2. The fire alarm system also produces an audible and visual alarm in the main control room and the security central alarm station.

Portable fire extinguishers located inside the building and outdoors near the circulating water pumps, and outdoor yard hydrants, provide means of manual fire suppression.

The intake structures and service buildings are located away from safety-related plant areas such that a fire will not damage equipment, components, or structures required for safe shutdown of the plant.

9A.3.3.3 RWS Intake Structure

The RWS incorporates an open concrete intake structure located outdoors at the Monticello Reservoir. The intake structure is comprised of six intake bays and six raw water pumps; three per unit. The facility includes bar screens and dual flow traveling screens for debris control, a debris basin, and four screen wash pumps. Each of the three raw water pumps serving each unit is rated for 50% capacity.

The intake structure incorporates a single-story service building to house switchgear and related equipment required for operation of the traveling screens, the screen wash pumps, and the raw water pumps. The building is of noncombustible unprotected construction and measures approximately 2,000 ft^2 in area. The combustible loading is estimated to be less than one hour (<80,000 Btu/ft^2), the major contributor being cable insulation.

The building incorporates a fire alarm system comprised of automatic fire detection, manual pull stations, and audible alarm notification appliances in accordance with Appendix 9A.2.4 for combustible loadings up to 80,000 Btu/ft^2. The fire alarm system also produces an audible and visual alarm in the main control room and the security central alarm station.

Portable fire extinguishers located inside the building and outdoors near the raw water and screen wash pumps provide means of manual fire suppression.

The intake structure and service building are located away from safety-related plant areas such that a fire will not damage equipment, components, or structures required for safe shutdown of the plant.

9A.3.3.4 Warehouse

A single-story warehouse is provided for storage and handling of bulk materials, of the type and quantity within acceptable limits as allowed by code. The facility is common to serve both units, and is comprised of noncombustible unprotected construction. The potential combustible loading is estimated to be greater than one hour (>80,000 Btu/ft^2); thus the facility requires detection capability and automatic and manual fire suppression in accordance with Appendix 9A.2.4.

The building incorporates full area ceiling sprinkler protection which is conservatively designed for Class IV commodities and unexpanded plastics in open rack storage up to a height of 25 feet. The automatic sprinklers satisfy the detection requirement, so supplemental detection is not required.

The building incorporates a fire alarm system comprised of manual pull stations and automatic audible alarm notification appliances. The fire alarm system also produces an audible and visual alarm in the main control room and the security central alarm station.

Portable fire extinguishers and a Class II standpipe hose system are provided throughout the building for manual firefighting. Additionally, the facility is provided with outdoor yard hydrants.

The warehouse is located away from safety-related plant areas such that a fire will not damage equipment, components, or structures required for safe shutdown of the plant.

9A.3.3.5 Service Building

The maintenance shop and offices are located in a Service Building that is common for both units. The building is comprised of mixed use occupancy in accordance with building code criterion. The facility is noncombustible unprotected construction. The potential combustible leading is estimated to be greater than one hour (>80,000 Btu/ft^2); thus, the facility requires detection capability and automatic and manual fire suppression in accordance with Appendix 9A.2.4.

The building incorporates full area automatic sprinkler protection, with portable fire extinguishers and a Class II standpipe hose system for manual firefighting. Additionally, the facility is provided with outdoor yard hydrants.

The building incorporates a fire alarm system comprised of supplemental automatic smoke detection throughout the office areas, manual pull stations, and automatic audible alarm notification appliances. The automatic sprinklers satisfy the detection requirement in the maintenance shop area, where smoke detection

may not be appropriate, so supplemental detection is not required in this area. The fire alarm system also produces an audible and visual alarm in the main control room and the security central alarm station.

The maintenance shop and offices are located away from safety-related plant areas such that a fire will not damage equipment, components, or structures required for safe shutdown of the plant.

9A.3.3.6 Sanitary Waste Treatment

A modular prefabricated and packaged sanitary treatment facility is provided for processing domestic wastewater, and serves both units. The system incorporates blowers; pumps; equalization, aeration, and sludge holding tanks; clarifiers; and disinfection units, with all necessary piping, valves and controls. The modular system is located outdoors and is constructed of combustible and noncombustible materials.

A portable fire extinguisher is provided at an accessible location immediately adjacent to the equipment and outdoor yard hydrants are located near the unit for manual firefighting.

The sanitary waste treatment facility is located away from safety-related plant areas such that a fire involving the equipment will not damage equipment, components, or structures required for safe shutdown of the plant.

9A.3.3.7 Hydrogen Storage Tank Area

A bulk hydrogen gas storage area is provided for each unit. The storage area is located outdoors at a safe distance of greater than 100 feet from all other buildings on site. The storage area is located at a safe distance of greater than 640 feet from safety-related structures, systems and components (SSCs). Additionally, the area is located remote from overhead power lines.

The storage area is comprised of a concrete slab and valve station for piping interface with the unit. Gas storage will use mobile tube trailers, designed and constructed in accordance with DOT (U.S. Department of Transportation) requirements. Provisions are included to electrically bond the mobile trailer unit to the valve station and secure it in position to prevent movement. The storage area is enclosed by a fence to prevent unauthorized personnel from entering the area.

Electrical equipment located within a 15-foot radius of the storage area is rated Class I, Division 2, Group B in accordance with Article 501 of the NEC (National Electrical Code).

A portable fire extinguisher is provided at an accessible location immediately adjacent to the equipment and outdoor yard hydrants are located in proximity to the unit, for manual fire fighting.

The hydrogen gas storage area is located away from safety-related plant areas such that a fire involving the equipment will not damage equipment, components, or structures required for safe shutdown of the plant.

STD COL 9.5-3 Stairwells in miscellaneous buildings located in the yard serving as escape routes or access routes for firefighting are enclosed in masonry or concrete towers with a minimum fire resistance rating of 2 hours and self-closing Class B fire doors. The two-hour fire-resistance rating for the masonry or concrete material is based on testing conducted in accordance with ASTM E119 (Reference 201) and NFPA 251 (Reference 202).

9A.4 REFERENCES

201. American Society of Mechanical Engineers, “Standard Test Methods for Fire Tests of Building Construction and Materials,” ASTM E119-08a.

202. National Fire Protection Association, “Standard Methods of Tests of Fire Endurance of Building Construction and Materials,” NFPA 251, 2006.

Security-Related Information — Withheld Under 10 CFR 2.390(d)
(See Part 9 of this COL Application)

VCS DEP 18.8-1

(Note: This figure replaces DCD Figure 9A-3 Sheet 1 of 3. This replacement is necessary to support the alternate locations of the Technical Support Center and the Operations Support Center per Departure Number VCS DEP 18.8-1.)

Figure 9A-201
Annex I and II Building Fire Areas Plan at Elevation 100'-0" & 107'-2"