Appendix 3.5.1 Description of the Thermal Model

In order to evaluate the performance of the Versa-Pac for all conditions of transport, a quarter-symmetric transient finite element analysis (FEA) model was developed using ALGOR Release 18.1. This appendix provides a description of the thermal models.

Both 55-gallon and 110-gallon packages were modeled; the 55-gallon package was found to be bounding in performance and therefore the results for the 110-gallon package are not reported. Also, the package was modeled with and without contents, and the model without contents, even without the decay heat input, was found to be bounding. These results are expected, as can be demonstrated by a simple inspection of the equation of state used in the transient analyses:

$$Q = m\, C_p\, \Delta T$$

Where

Q is the heat input (fixed by the fire boundary condition),
m is the mass of the package,
C_p is the equivalent specific heat of the package, and
ΔT is the change in temperature of the package.

Since Q is constrained, any increase in m due to the addition or exclusion of contents leads to a lower ΔT. Also, any increase in C_p due to the addition or exclusion of contents leads to a lower ΔT. Thus, exclusion of the contents is expected to produce the highest temperatures on the interior wall of the package. Although Q is slightly higher for the 110-gallon Versa-Pac due to the slightly higher external surface area to which the fire is applied, this is greatly offset by the increased payload capacity and volume of steel and insulation added to the package.

All components were modeled using brick elements. The typical and maximum element side lengths used in the model are 0.25" and 0.79", respectively. With the exception of the air gap between the outer lid and the payload cavity lid, the package is a conduction-only problem. In order to simplify the calculation matrix, the air gap was also reduced to a conduction equivalent condition using the method described in Appendix 3.5.2.

Table 3.5.1.1 provides a comparison of the modeled dimensions versus the nominal package dimensions for the 55-gallon Versa-Pac. Table 3.5.1.2 provides a comparison of the modeled dimensions versus the nominal package dimensions for the 110-gallon Versa-Pac. Table 3.5.1.3 provides the thermal material properties used in the analyses in basic units; Table 3.5.1.4 provides the same information in traditional English units. Table 3.2 lists the conditions analyzed, including the initial conditions and heat loads.

For the fire analysis, the external surface nodes were constrained to a temperature of 1475°F. For both the 55-gallon and 110-gallon versions, the contents was modeled with a decay heat load of 0.022 in-lb_f/s / in^3 and 0.0085 in-lb_f/s / in^3 for the 55-gallon and 110-gallon packages, respectively for a conservative total package heat load of 11.4 W (with the exception of the void case, where the contents is not included in the model). The model was run for 30 time

steps, with each time step 60 seconds long. The convergence tolerance was set to 0.000001 for the non-linear analysis.

For the cooldown sequence, natural convection was applied to the external nodes, assuming an ambient temperature of 100°F. The convection coefficients are applied based on the nodal temperature of the external nodes and are updated at each timestep. The convection coefficients are calculated based on the Rayleigh number and free convection coefficients as presented by Reference 1:

$$Ra_L = [g\ \beta\ (T_s - T_\infty)\ L^3]/\nu\alpha$$

Where:

Ra_L is the Rayleigh number based on the characteristic plate length,
g is gravitational acceleration, 9.81 m/s,
β is the volumetric thermal expansion coefficient for air, evaluated at the average film temperature, $(T_s - T_\infty)/2$, and approximated as $1/T_{\text{film average, absolute}}$,
T_s is the surface temperature of the heated plate at the node of interest, °C,
T_∞ is the ambient air temperature, 38°C (100°F),
L is the characteristic length of the heated plate, 0.8128 m (32”),
ν is the kinematic viscosity of air evaluated at the average film temperature, $(T_s - T_\infty)/2$, in m^2/s, and
α is the thermal diffusivity of air evaluated at the average film temperature, $(T_s - T_\infty)/2$, in m^2/s.

Note that for evaluation of the Rayleigh Number the temperatures need not be in absolute units, since the delta is used in the formulation.

The sides of the package are treated as a vertical heated plate:

$$Nu_{L,\ avg} = [0.825 + (0.387\ Ra_L^{1/6})/(1 + (0.492/Pr)^{9/16})^{8/27}]^2$$

Where:

$Nu_{L,\ avg}$ is the average Nusselt number,
Ra_L is the Rayleigh number based on the characteristic plate length, and
Pr is the Prandtl number for air evaluated at the average film temperature, $(T_s - T_\infty)/2$.

Per Reference 1, this correlation is deemed appropriate for vertical cylinders if:

$$D/L \geq 35/Gr^{1/4},$$

Where:

D is the diameter of the cylinder, 0.57 m (22.5”) for the 55-gallon VersaPac,
L is the height of the cylinder, 0.81 m (32”),
Gr is the Grashof number and is defined as:

$$Gr = [g\ \beta\ (T_s - T_\infty)\ L^3]\ /\ \nu^2$$

For the range of potential package surface temperatures, the correlation is well within the appropriate range for use of the vertical heated plate correlation.

The circular top of the package is treated as a horizontal plate:

$$Nu_{L,\,avg} = 0.54\ Ra_L^{\,1/4} \quad (10^4 \le Ra_L \le 10^7).$$

Per Reference 1, the characteristic length to be used in the Rayleigh number calculation is defined as:

$$L = A_s / P = 0.14\ m$$

Where:

A_s is the surface area of the plate, $\pi D^2/4$, and

P is the perimeter of the plate, πD.

For the range of potential package surface temperatures and the characteristic length, the correlation is well within the appropriate range for use of the horizontal heated plate correlation.

The natural convection coefficient input to the code is calculated from the Nusselt Number as:

$$h_{avg} = Nu_{L,\,avg}\ k / L,$$

Where:

h_{avg} is the natural convection coefficient for the horizontal or vertical heated plates,

$Nu_{L,\,avg}$ is the average Nusselt Number as defined previously, and

k is the thermal conductivity of air evaluated at the average film temperature, $(T_s - T_\infty)/2$.

For purposes of calculating the convection coefficients, 24 discrete package wall temperatures were selected for evaluation, ranging from 39°C to 810°C. Using an ambient air temperature of 100°F (37.8°C), the convection coefficient was calculated in units of W/m^2K and were then converted to the units used in the Algor code (in-lb_f/s-R-in^2). When the nodal temperature falls between the evaluated points, the Algor code linearly interpolates the convection coefficient.

Table 3.5.1.5 summarizes the material properties of air from Reference 1. Table 3.5.1.6 presents the convection coefficient calculations and the coefficients that were input to the code. For both the 55-gallon and 110-gallon versions, the contents was modeled with a decay heat load of 0.022 in-lbf/s / in^3 and 0.0085 in-lbf/s / in^3 for the 55-gallon and 110-gallon packages, respectively for a conservative total package heat load of 11.4 W (with the exception of the void case, where the contents is not modeled). The cooldown sequence utilized the fire sequence nodal temperatures at the end of the 30 minute fire sequence as the initial temperature of the nodes. Insolation was applied to the exterior surface nodes at the rate specified by regulation (see Table 3.2) for 12-hours on and 12-hours off. The model was run for 120 time steps, with each time step 60 seconds long (in order to conserve space, the results were recorded at every third time step only). The convergence tolerance was set to 0.000001 for the non-linear analysis. Since the peak temperatures were reached within the first hour of the cooldown, the results bound the remainder of the cooldown to equilibrium NCT conditions.

The 55-gallon model is illustrated in Figures 3.5.1-1 through 3.5.1-14. The 110-gallon model is illustrated in Figure 3.5.1-15. These same models were used for all NCT and HAC fire and cooldown sequences.

Reference 1: Incropera, Frank P. and David P. DeWitt, *Fundamentals of Heat and Mass Transfer Third Edition, John Wiley & Sons*, New York, 1981, pp. 530-554, A15.

Table 3.5.1- 1 Comparison of Modeled Components versus Nominal Package Components for the 55-gallon Versa-Pac

Model Part #	Drawing component ID	Material of construction	Modeled material (see Table 3.5.1-2)	Component nominal thickness	Modeled component thickness
1	PE & FD	A36	Isotropic steel	1 / 4”	0.250”
2	PF	A36	Isotropic steel	3 / 4”	0.750”
3	FA	A36	Isotropic steel	3/16”	0.188”
4	SA & FA	A1011	Isotropic steel	16 ga.	0.060”
5	FB	A36	Isotropic steel	3/16”	0.188”
9	FC	A1011	Isotropic steel	16 ga.	0.060”
10	PG	A36	Isotropic steel	3/16”	0.188”
11	PB	A1011	Isotropic steel	10 ga.	0.140”
12	PI	A36	Isotropic steel	3/16”	0.188”
13	PA & PH	A1011 & A36	Isotropic steel	10 ga. & 1/4”	0.140” & 0.500”[1]
14	PC, DL, SB, SC	A1011	Isotropic steel	10 ga., 16 ga., 16 ga. & 16 ga.	0.140”, 0.060”, 0.060” & 0.060”
15	FK	A36	Isotropic steel	¼” x 1½” tall	0.250” x 1.50” tall
16, 17, 18	IA	Alumina silica insulation	Temperature dependent isotropic alumina silica	1.5”	1.25”
19	IB	6pcf polyurethane	6pcf polyurethane	2 1/8”	2.125”
24	IA	Alumina silica insulation	Temperature dependent isotropic alumina silica	2”	1.94”
25	IC	6pcf polyurethane	6pcf polyurethane	2 3/16”	2.188”
26, 27, 28, 29, 30, 31	TB	A500 GR.B	Isotropic steel	1¼” sq x $^{3}/_{16}$” x ~32” tall, volume=25.5 in^3 each	~1.18” sq x 0.2125”, ~32” tall, volume = 26.3 in^3 each
62	PolyU insert	10 pcf polyurethane	9.8 pcf polyurethane	3”	3.00”
71	PI	A36	Isotropic steel	3/16”	0.188”
79	IE & IF	Fiberglass	Fiberglass	0.5”	0.500”
96	PD	A36	Isotropic steel	½”	0.500”
104	N/A	N/A	Air	0.5” thick at lid	0.44” thick at lid
115	BB	A36	Isotropic steel	1¼” x 1¼” x 1½”	1.25” x 1.25” x 1.5”
120	N/A	N/A	CONTENTS	15” diameter x 24.06” tall	15.22” diameter x 25.24” tall

[1] Although this component thickness is modeled at twice the actual component thickness, this is considered to be conservative, since it provides an enhanced pathway for heat conduction to the interior of the package.

Table 3.5.1- 2 Comparison of Modeled Components versus Nominal Package Components for the 110-gallon Versa-Pac

Model Part #	Drawing component ID	Material of construction	Modeled material (see Table 3.5.1-2)	Component nominal thickness	Modeled component thickness
1	PE & FD	A36	Isotropic steel	1 / 4”	0.250”
2	PF	A36	Isotropic steel	3 / 4”	0.750”
3	FA	A36	Isotropic steel	3/16”	0.188”
4	SA & FA	A1011	Isotropic steel	16 ga.	0.060”
5	FB	A36	Isotropic steel	3/16”	0.188”
9	FC	A1011	Isotropic steel	16 ga.	0.060”
10	PG	A36	Isotropic steel	3/16”	0.188”
11	PB	A1011	Isotropic steel	10 ga.	0.140”
12	PI	A36	Isotropic steel	3/16”	0.188”
13	PA & PH	A1011 & A36	Isotropic steel	10 ga. & 1/4”	0.140” & 0.500”[2]
14	PC, DL, SB, SC	A1011	Isotropic steel	10 ga., 16 ga., 16 ga. & 16 ga.	0.140”, 0.060”, 0.060” & 0.060”
15	FK	A36	Isotropic steel	¼” x 1½” tall	0.250” x 1.50” tall
16, 17, 18	IA	Alumina silica insulation	Temperature dependent isotropic alumina silica	1.5”	1.25”
19	IB	6pcf polyurethane	6pcf polyurethane	3 ½”	2.125”
24	IA	Alumina silica insulation	Temperature dependent isotropic alumina silica	2 ½”	1.94”
25	IC	6pcf polyurethane	6pcf polyurethane	3 ¼”	2.188”
26, 27, 28, 29, 30, 31	TB	A500 GR.B	Isotropic steel	1¼” sq x $^{3}/_{16}$” x ~40 $^{3}/_{4}$” tall, volume=32.5 in^{3} each	~1.18” sq x 0.2125” x ~40 $^{3}/_{4}$” tall, volume = 33.5 in^{3} each
62	PolyU insert	10 pcf polyurethane	9.8 pcf polyurethane	3”	3.00”
71	PI	A36	Isotropic steel	3/16”	0.188”
79	IE & IF	Fiberglass	Fiberglass	0.5”	0.500”
96	PD	A36	Isotropic steel	½”	0.500”
104	N/A	N/A	Air	0.5” thick at lid	0.44” thick at lid
115, 116 & 117	BB	A36	Isotropic steel	1¼” x 1¼” x 1½”	1.25” x 1.25” x 1.5”
120	N/A	N/A	CONTENTS	21” diameter x 32.25” tall	NA

[2] Although this component thickness is modeled at twice the actual component thickness, this is considered to be conservative, since it provides an enhanced pathway for heat conduction to the interior of the package.

Table 3.5.1- 3 Thermal Material Properties for the Versa-Pac (Basic Units)

Material	Density (lb_f - s^2/in)/(in^3)	Thermal Conductivity (in-lb_f)/(s-in-8F)	Specific Heat (in-lb_f)/(lb_f s^2/in)- 8F	Heat Generation Rate (in-lb_f)/(s-in^3)	Source
Isotropic steel	7.35E-4	5.84	4.1849E5	N/A	General industry data (matweb, ALGOR material library)
8 pcf Temperature dependent isotropic alumina silica	1.199E-5	8F TC 27 0.007926 500 0.007926 1000 0.016 1500 0.026 1800 0.037 2000 0.048	9.374E5	N/A	Century Industries SOP6.12; general industry data (matweb, Cer-wool, Fiberfrax)
Fiberglass – Extren525 Isophthalic polyester resin	1.606E-4	0.072	1.009E6	N/A	Century Industries SOP6.13, also "Typical Properties – FRP Structural Shapes", Enduro Systems, Inc., www.endurocomposites.com.
Isotropic 6.0 pcf Polyurethane	8.993E-6	3.386E-3	1.273E6	N/A	Century Industries SOP6.11, also General industry data (matweb). Not used in model since alumina silica is bounding
Isotropic 9.8 pcf Polyurethane	1.469E-5	5.026E-3	1.576E6	N/A	Century Industries SOP6.11, also General industry data (matweb). Not used in model since alumina silica is bounding
Air, conduction + radiation	1.087E-7	L=0.44" $8F_{average}$ TC -40 0.017 22.4 0.017 202.4 0.040 382.4 0.083 562.4 0.147 742.4 0.237 922.4 0.357 1102 0.513 1282 0.709 1462 0.949 1642 1.239	8.671E5	N/A	see Appendix 3.5.2
Contents 1, wood	8.094E-5	0.022	3.358E5	0.022 (55-gal) 0.0085 (110 gal)	General industry data (matweb)
Contents 2, void	N/A	N/A	N/A	N/A	N/A
Contents 3, solid steel	7.35E-4	5.84	4.1849E5	0.022 (55-gal) 0.0085 (110 gal)	General industry data (matweb, ALGOR material library)

Table 3.5.1- 4 Thermal Material Properties for the Versa-Pac (English Units)

Material	Density (lb / ft^3)	Thermal Conductivity (BTU / hr-ft-8F)	Specific Heat (BTU / lb-8F)	Heat Generation Rate (BTU / hr-in^3)	Source
Isotropic steel	2.836E-01	2.251	0.116	N/A	General industry data (matweb, ALGOR material library)
8 pcf Temperature dependent isotropic alumina silica	4.630E-03	8F TC 27 3.083E-03 500 3.083E-03 1000 6.167E-03 1500 1.000E-02 1800 1.425E-02 2000 1.850E-02	0.260	N/A	Century Industries SOP6.12; general industry data (matweb, Cer-wool, Fiberfrax)
Fiberglass – Extren525 Isophthalic polyester resin	6.192E-02	2.775E-02	0.280	N/A	Century Industries SOP6.13, also "Typical Properties – FRP Structural Shapes", Enduro Systems, Inc., www.endurocomposites.com.
Isotropic 6.0 pcf Polyurethane	3.472E-03	1.333E-03	0.353	N/A	Century Industries SOP6.11, also General industry data (matweb). Not used in model since alumina silica is bounding
Isotropic 9.8 pcf Polyurethane	5.671E-03	1.917E-03	0.437	N/A	Century Industries SOP6.11, also General industry data (matweb). Not used in model since alumina silica is bounding
Air, conduction + radiation	4.225E-05	L=0.44" 8F$_{average}$ TC -40 6.583E-03 22.4 6.583E-03 202.4 1.542E-02 382.4 3.200E-02 562.4 5.667E-02 742.4 9.133E-02 922.4 1.377E-01 1102 1.978E-01 1282 2.733E-01 1462 3.658E-01 1642 4.777E-01	0.241	N/A	see Appendix 3.5.2
Contents 1, wood	3.125E-02	8.500E-03	0.093	0.008481 (55-gal) 0.003277 (110 gal)	General industry data (matweb)
Contents 2, void	N/A	N/A	N/A	N/A	N/A
Contents 3, solid steel	2.836E-01	2.251	0.116	0.008481 (55-gal) 0.003277 (110 gal)	General industry data (matweb, ALGOR material library)

Table 3.5.1- 5 Material Properties for Air used to evaluate Natural Convection Coefficiencts

All values taken from Reference 1.

Air Temperature (K)	$\nu * 10^6$	$k * 10^3$	$\alpha * 10^6$	Pr
	m^2/s	W/m-K	m^2/s	
300	15.89	26.3	22.5	0.707
350	20.92	30.0	29.9	0.700
400	26.41	33.8	38.3	0.690
450	32.39	37.3	47.2	0.686
500	38.79	40.7	56.7	0.684
550	45.57	43.9	66.7	0.683
600	52.69	46.9	76.9	0.685
650	60.21	49.7	87.3	0.690
700	68.10	52.4	98.0	0.695

Table 3.5.1- 6 Natural Convection Coefficients for the Versa-Pac Cool-down Sequence

Film Temperature (K) (note 2)	Film Temperature (C) (note 2)	Film Temperature (F) (note 2)	v (10^6 m^2/s) (note 1 & 2)	K (10^3 W/m-K) (note 1 & 2)	α (10^6 m^2/s) (note 1 &2)	Pr (note 1 &2)	Nodal Wall temperature (F)	Nodal Wall temperature (C)	Ra vertical	Ra Horizontal	Nu Vertical (note 3)	Nu Horizontal (note 4)	h vertical, (W/m^2-K)	h horizontal, (W/m^2-K)	h vertical (in-lb_f/s-R-in^2)	h horizontal (in-lb_f/s-R-in^2)
300	27.0	80.6	15.89	26.3	22.5	0.707	61.2	16.2	N/A	N/A	N/A	N/A	N/A	N/A	N/A	N/A
311	37.9	100.2	16.99	27.1	24.1	0.705	100.4	38.0	9.23E+06	4.71E+04	30.48	7.96	1.02	1.54	3.2245E-03	4.8868E-03
312	38.9	102.0	17.09	27.2	24.3	0.705	104.0	40.0	9.05E+07	4.63E+05	59.23	14.08	1.98	2.73	6.2827E-03	8.6728E-03
317	43.9	111.0	17.59	27.5	25.0	0.705	122.0	50.0	4.62E+08	2.36E+06	96.82	21.17	3.28	4.17	1.0409E-02	1.3212E-02
322	48.9	120.0	18.09	27.9	25.7	0.704	140.0	60.0	7.81E+08	3.99E+06	113.70	24.13	3.91	4.81	1.2388E-02	1.5266E-02
327	53.9	129.0	18.59	28.3	26.5	0.703	158.0	70.0	1.05E+09	5.39E+06	124.70	26.01	4.34	5.26	1.3768E-02	1.6675E-02
332	58.9	138.0	19.10	28.7	27.2	0.703	176.0	80.0	1.29E+09	6.58E+06	132.67	27.35	4.68	5.60	1.4839E-02	1.7763E-02
337	63.9	147.0	19.60	29.0	28.0	0.702	194.0	90.0	1.49E+09	7.61E+06	138.74	28.36	4.96	5.88	1.5718E-02	1.8655E-02
342	68.9	156.0	20.10	29.4	28.7	0.701	212.0	100.0	1.66E+09	8.49E+06	143.49	29.15	5.19	6.12	1.6463E-02	1.9415E-02
350	77.0	170.6	20.92	30.0	29.9	0.700	241.2	116.2	1.89E+09	9.65E+06	149.27	30.09	5.51	6.45	1.7476E-02	2.0455E-02
392	118.9	246.0	25.52	33.2	36.9	0.692	392.0	200.0	2.31E+09	1.18E+07	158.76	31.66 (note 5)	6.48	7.51	2.0559E-02	2.3806E-02
400	127.0	260.6	26.41	33.8	38.3	0.690	421.2	216.2	2.32E+09	1.19E+07	158.92	31.70 (note 5)	6.61	7.65	2.0962E-02	2.4274E-02
442	168.9	336.0	31.42	36.7	45.8	0.687	572.0	300.0	2.17E+09	1.11E+07	155.57	31.18 (note 5)	7.03	8.18	2.2300E-02	2.5947E-02
450	177.0	350.6	32.39	37.3	47.2	0.686	601.2	316.2	2.13E+09	1.09E+07	154.60	31.02 (note 5)	7.09	8.27	2.2504E-02	2.6219E-02
492	218.9	426.0	37.75	40.1	55.2	0.684	752.0	400.0	1.86E+09	9.52E+06	148.19	29.99	7.32	8.60	2.3219E-02	2.7285E-02
500	227.0	440.6	38.79	40.7	56.7	0.684	781.2	416.2	1.81E+09	9.26E+06	146.93	29.79	7.36	8.66	2.3338E-02	2.7472E-02
542	268.9	516.0	44.47	43.4	65.1	0.683	932.0	500.0	1.55E+09	7.93E+06	140.01	28.66	7.47	8.88	2.3703E-02	2.8169E-02
550	277.0	530.6	45.57	43.9	66.7	0.683	961.2	516.2	1.51E+09	7.70E+06	138.73	28.45	7.49	8.92	2.3768E-02	2.8297E-02
592	318.9	606.0	51.53	46.4	75.2	0.685	1112.0	600.0	1.29E+09	6.59E+06	132.25	27.36	7.55	9.07	2.3955E-02	2.8776E-02
600	327.0	620.6	52.69	46.9	76.9	0.685	1141.2	616.2	1.25E+09	6.40E+06	131.08	27.17	7.56	9.10	2.3991E-02	2.8867E-02
642	368.9	696.0	58.99	49.2	85.6	0.689	1292.0	700.0	1.08E+09	5.50E+06	125.15	26.15	7.58	9.20	2.4052E-02	2.9177E-02
650	377.0	710.6	60.21	49.7	87.3	0.690	1321.2	716.2	1.05E+09	5.35E+06	124.08	25.96	7.59	9.22	2.4066E-02	2.9238E-02

Film Temperature (K) (note 2)	Film Temperature (C) (note 2)	Film Temperature (F) (note 2)	v (10^6 m^2/s) (note 1 & 2)	K (10^3 W/m-K) (note 1 & 2)	α (10^6 m^2/s) (note 1 &2)	Pr (note 1 &2)	Nodal Wall temperature (F)	Nodal Wall temperature (C)	Ra vertical	Ra Horizontal	Nu Vertical (note 3)	Nu Horizontal (note 4)	h vertical, (W/m^2-K)	h horizontal, (W/m^2-K)	h vertical (in-lb_f/s-R-in^2)	h horizontal (in-lb_f/s-R-in^2)
692	418.9	786.0	66.82	52.0	96.3	0.694	1472.0	800.0	9.02E+08	4.61E+06	118.65	25.02	7.59	9.29	2.4060E-02	2.9459E-02
697	423.9	795.0	67.61	52.2	97.3	0.695	1490.0	810.0	8.87E+08	4.53E+06	118.04	24.92	7.59	9.30	2.4061E-02	2.9487E-02
700	427.0	800.6	68.10	52.4	98.0	0.695	1501.2	816.2	N/A	N/A	N/A	N/A	N/A	N/A	N/A	N/A

Notes on Table 3.5.1-5:

1. Air material properties are taken from Reference 1 as presented by Table 3.5.1-4. For temperatures between the values provided by the Reference, the material properties are linearly interpolated.
2. The material property values presented are for the air film temperature, which is assumed to be the average of the wall temperature and ambient (1008F≈37.88C≈310.98K).
3. Per Reference 1, the correlation is valid over all ranges of Rayleigh numbers.
4. Per Reference 1, the correlation is valid over a range of Rayleigh numbers from 10^4 to 10^7.
5. Although these Rayleigh numbers are slightly out of range of the correlation, they are conservatively lower than that calculated using the correlation provided by Reference 1 applicable at higher Rayleigh numbers and so is considered acceptable for use.

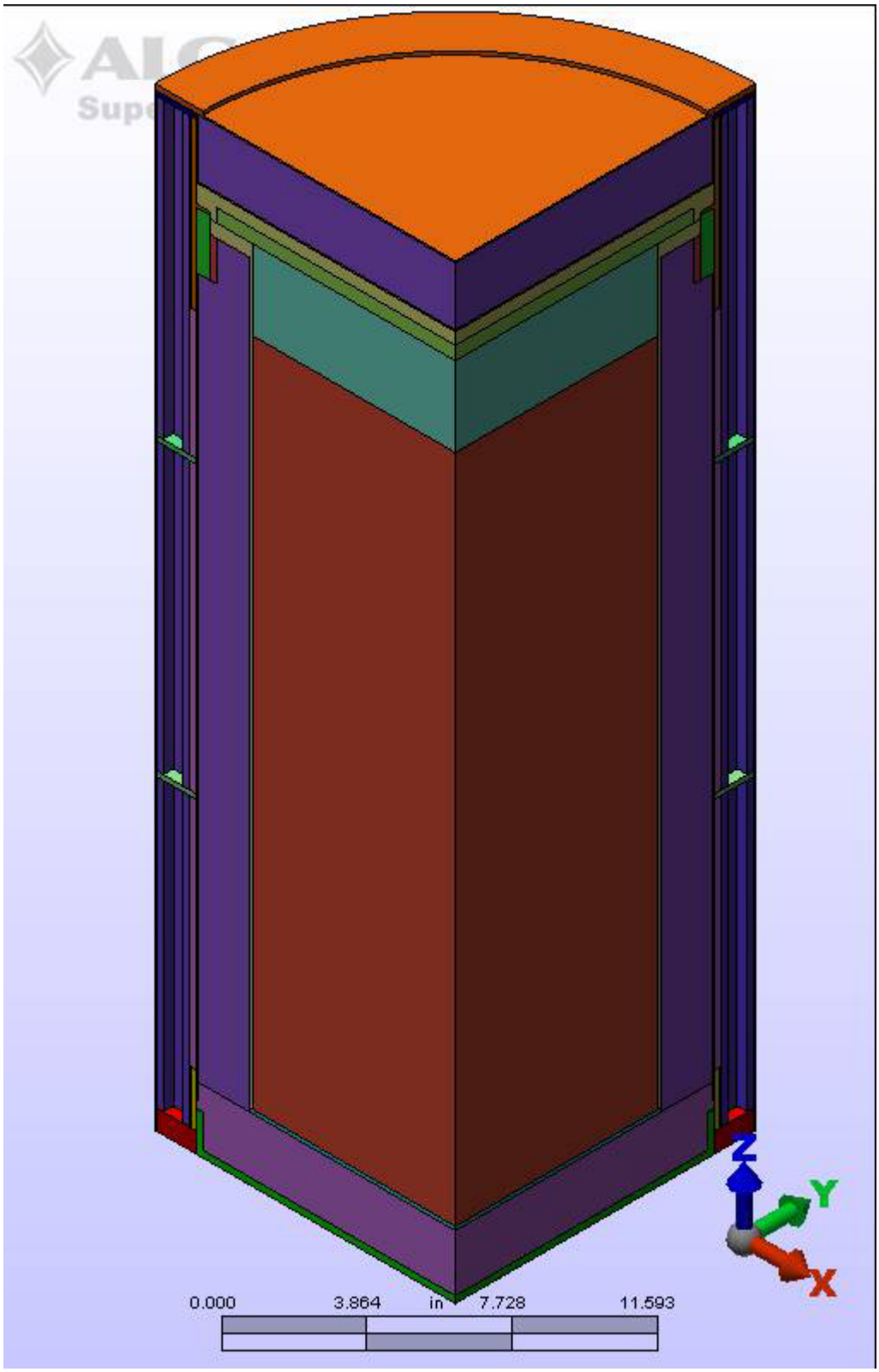

Figure 3.5.1- 1 Quarter-symmetric Thermal Model of 55-gallon Versa-Pac, all parts shown

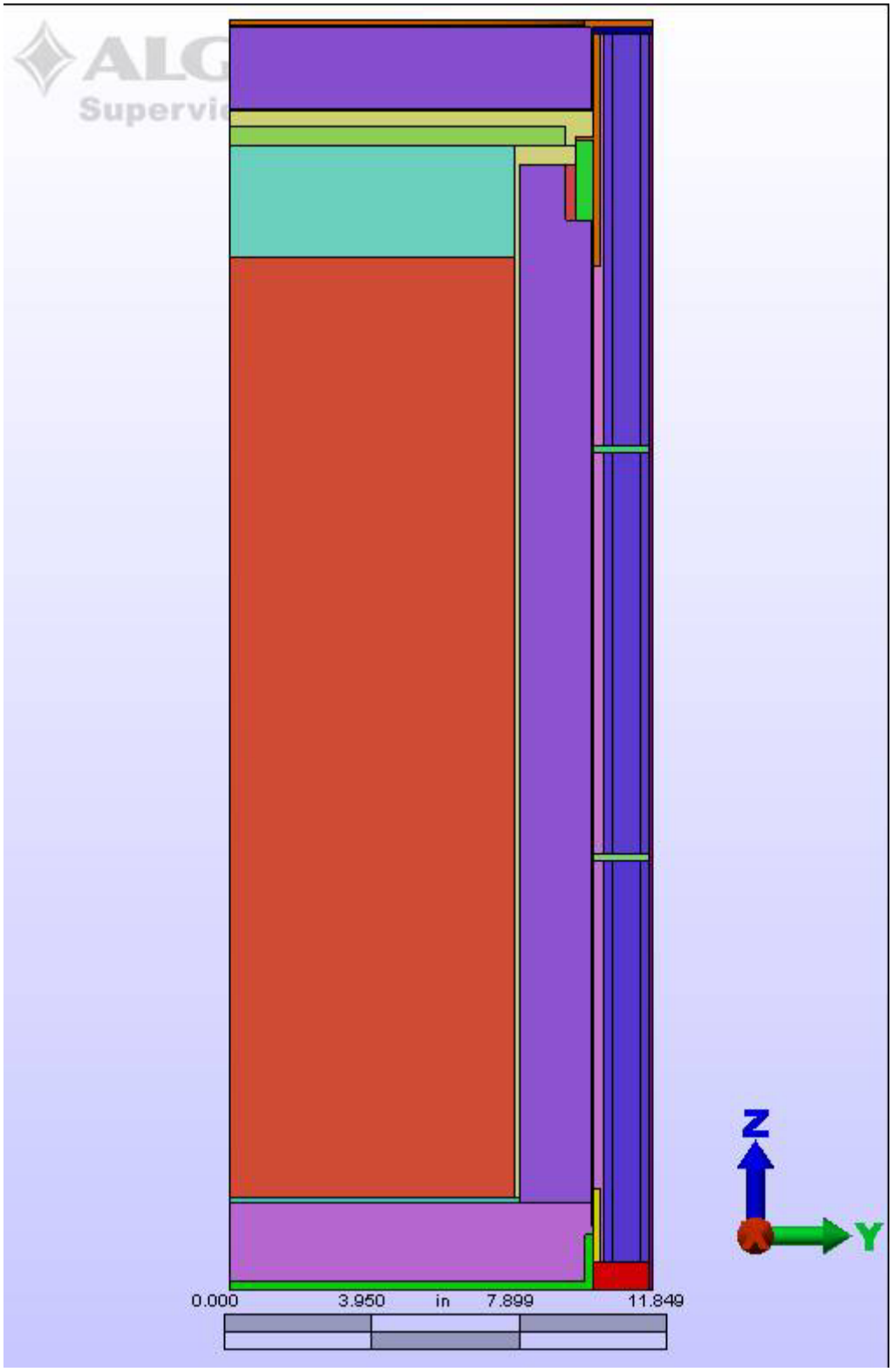

Figure 3.5.1- 2 Quarter-symmetric Thermal Model of 55-gallon Versa-Pac, all parts shown, side view

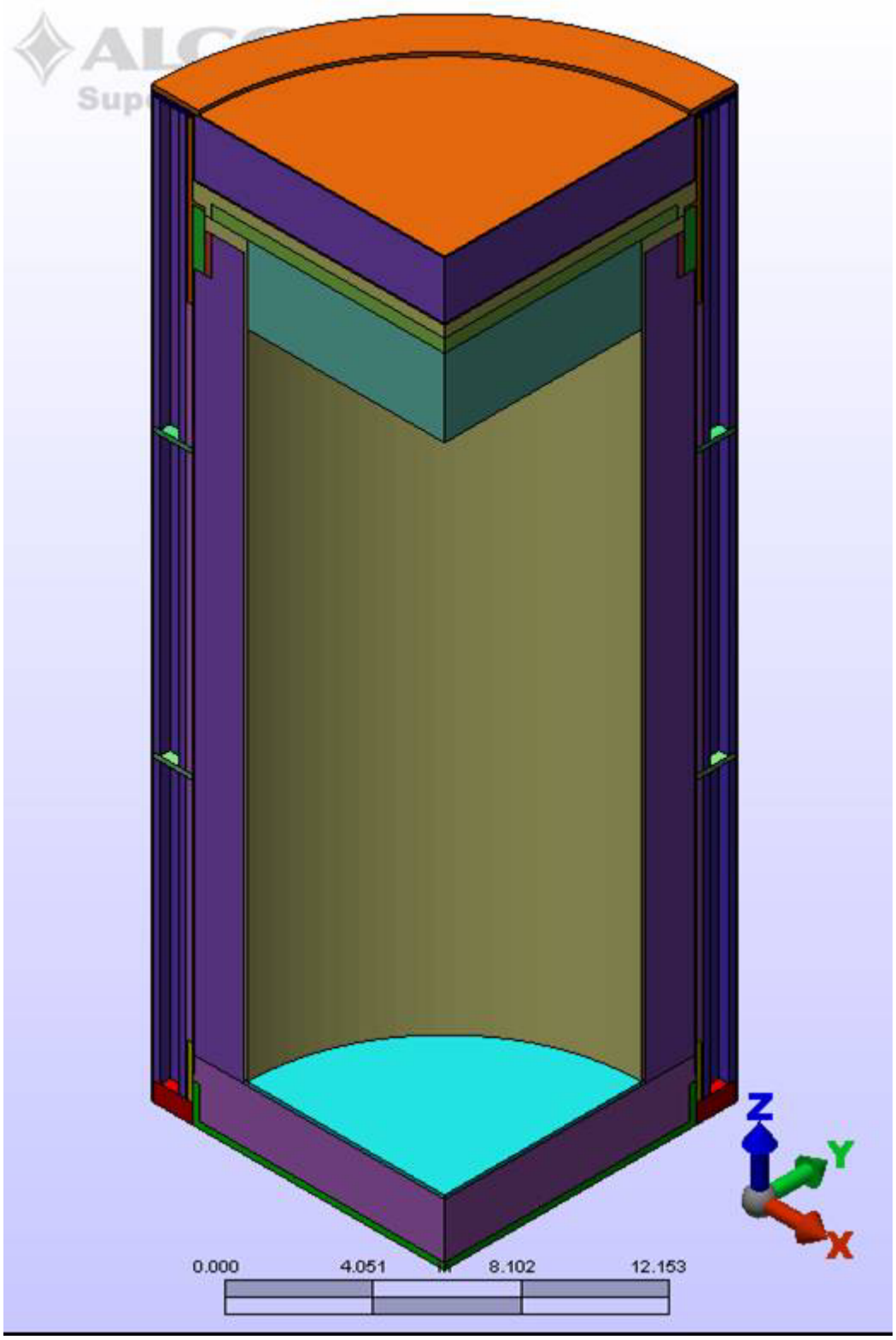

Figure 3.5.1- 3 Quarter-symmetric Thermal Model of 55-gallon Versa-Pac, contents not shown

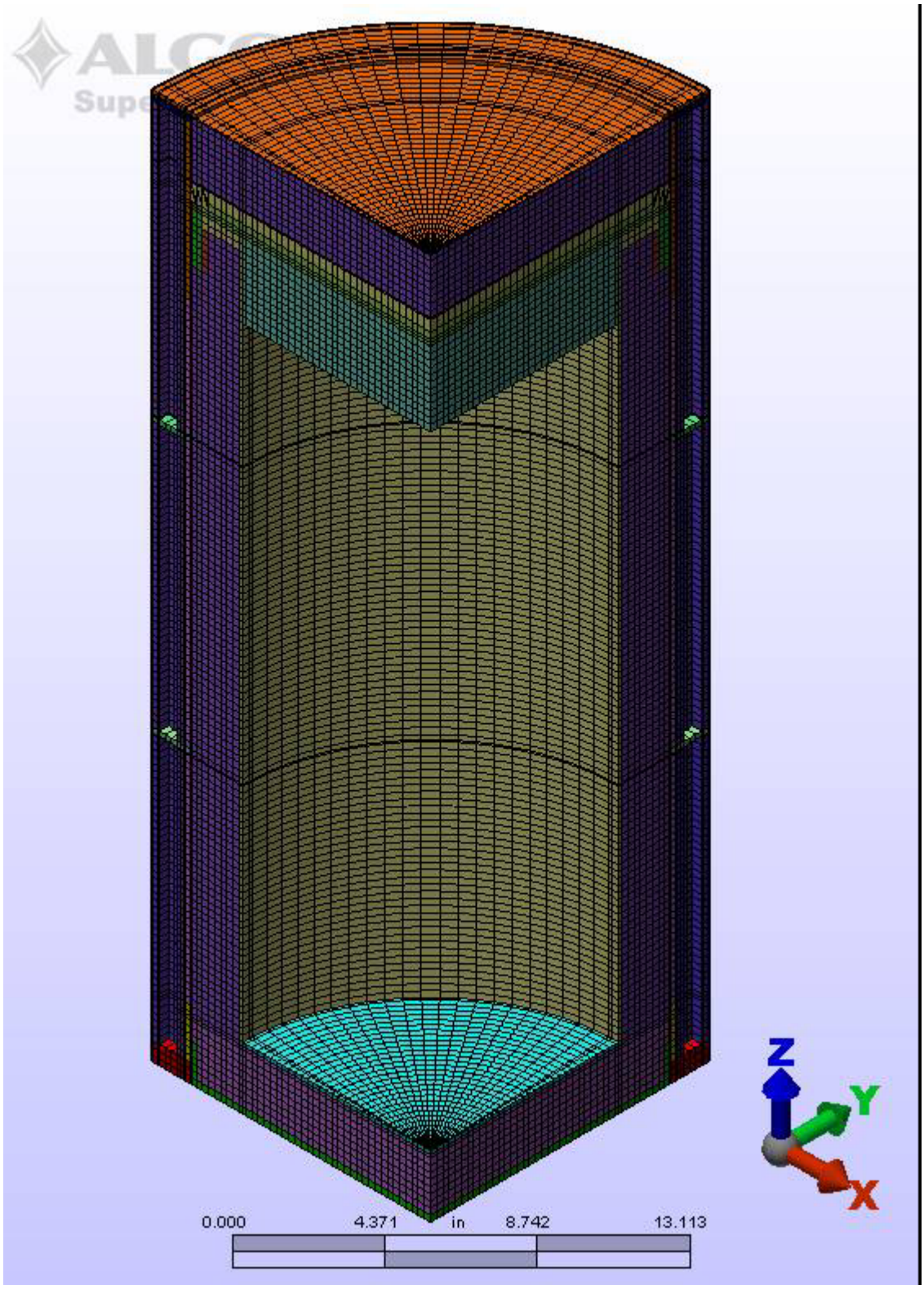

Figure 3.5.1- 4 Quarter-symmetric Thermal Model of 55-gallon Versa-Pac, contents not shown, mesh view

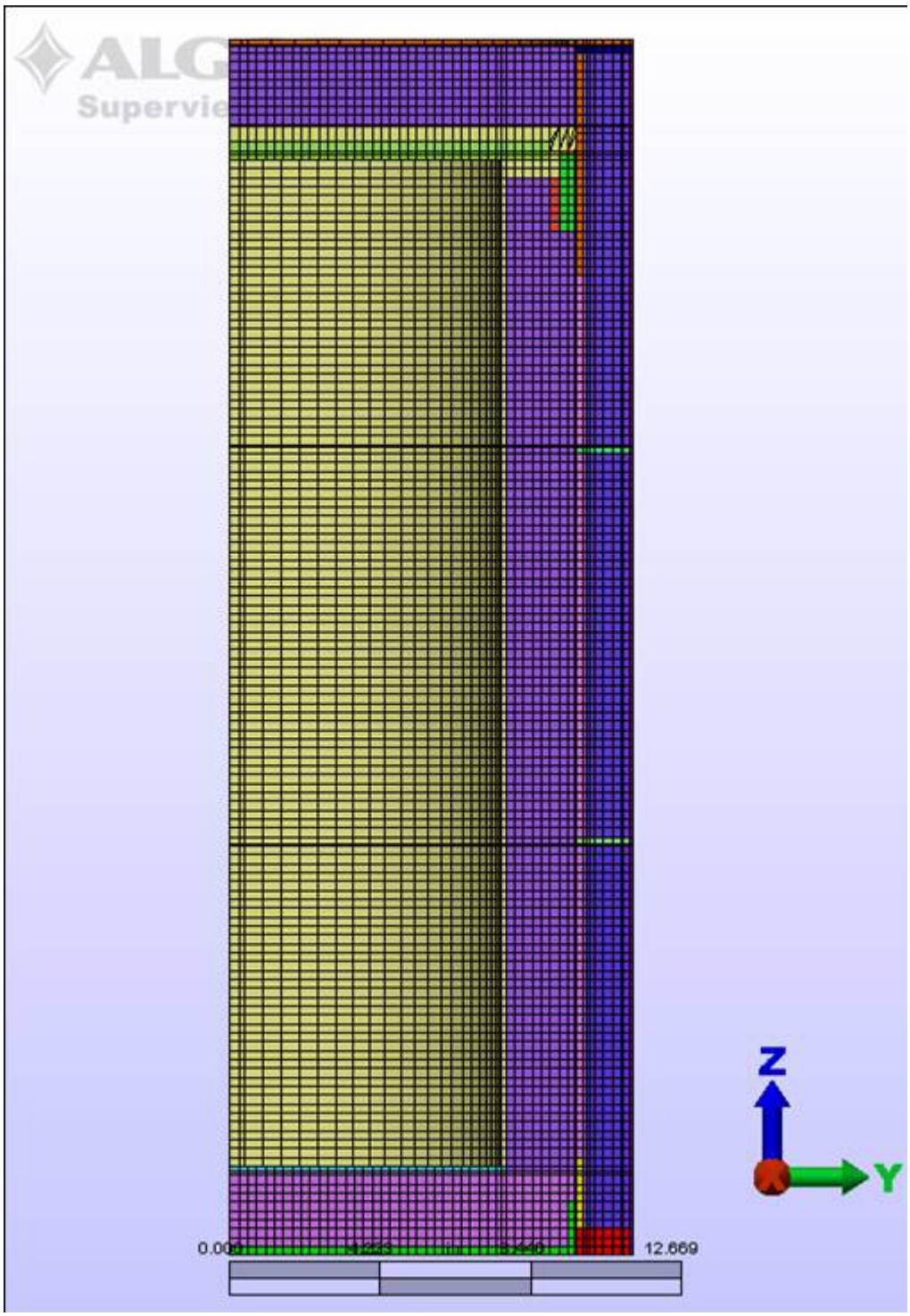

Figure 3.5.1- 5 Quarter-symmetric Thermal Model of 55-gallon Versa-Pac, contents not shown, side view with mesh

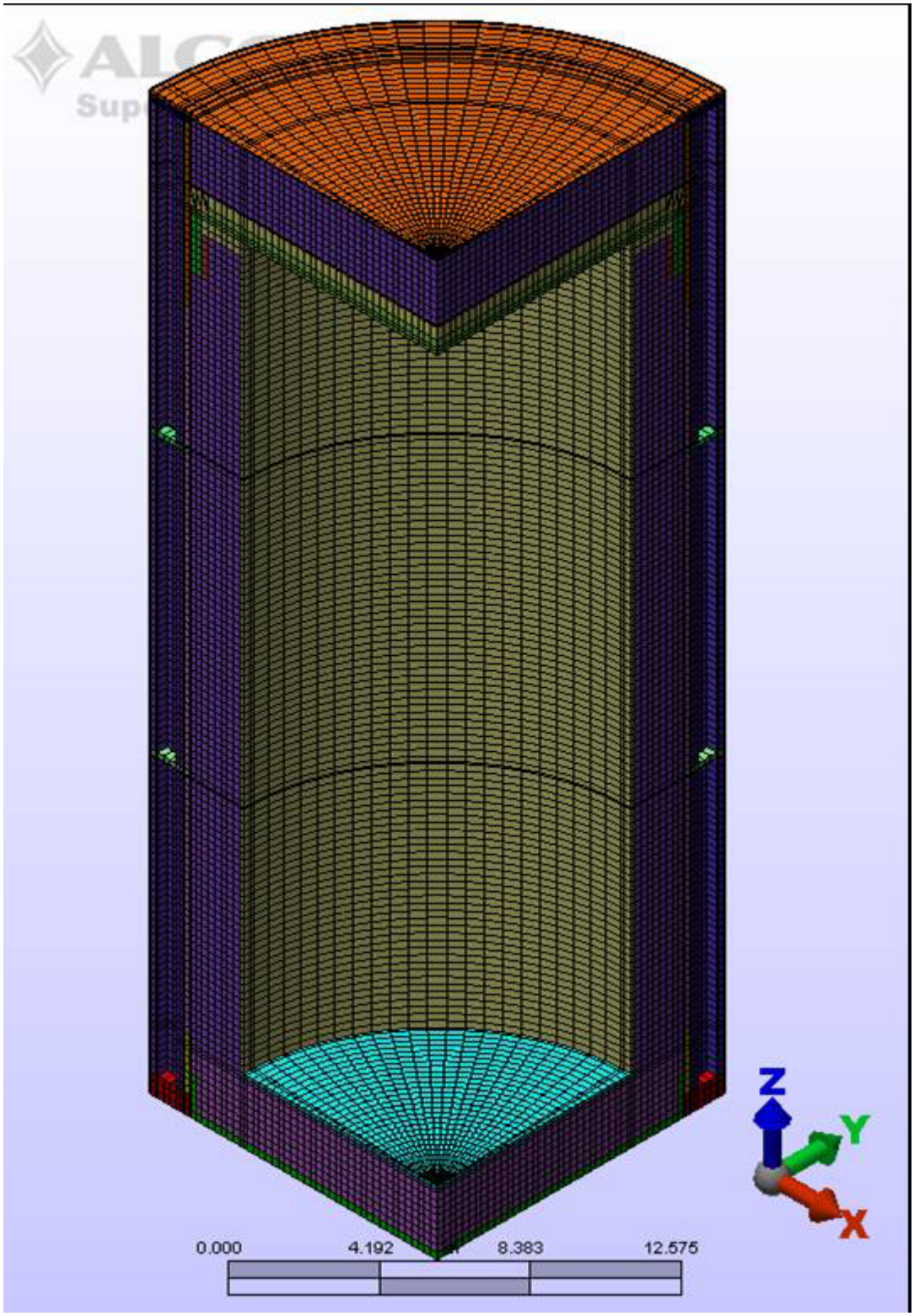

Figure 3.5.1- 6 Quarter-symmetric Thermal Model of 55-gallon Versa-Pac, Drum Lid removed (air gap between lids is shown in yellow)

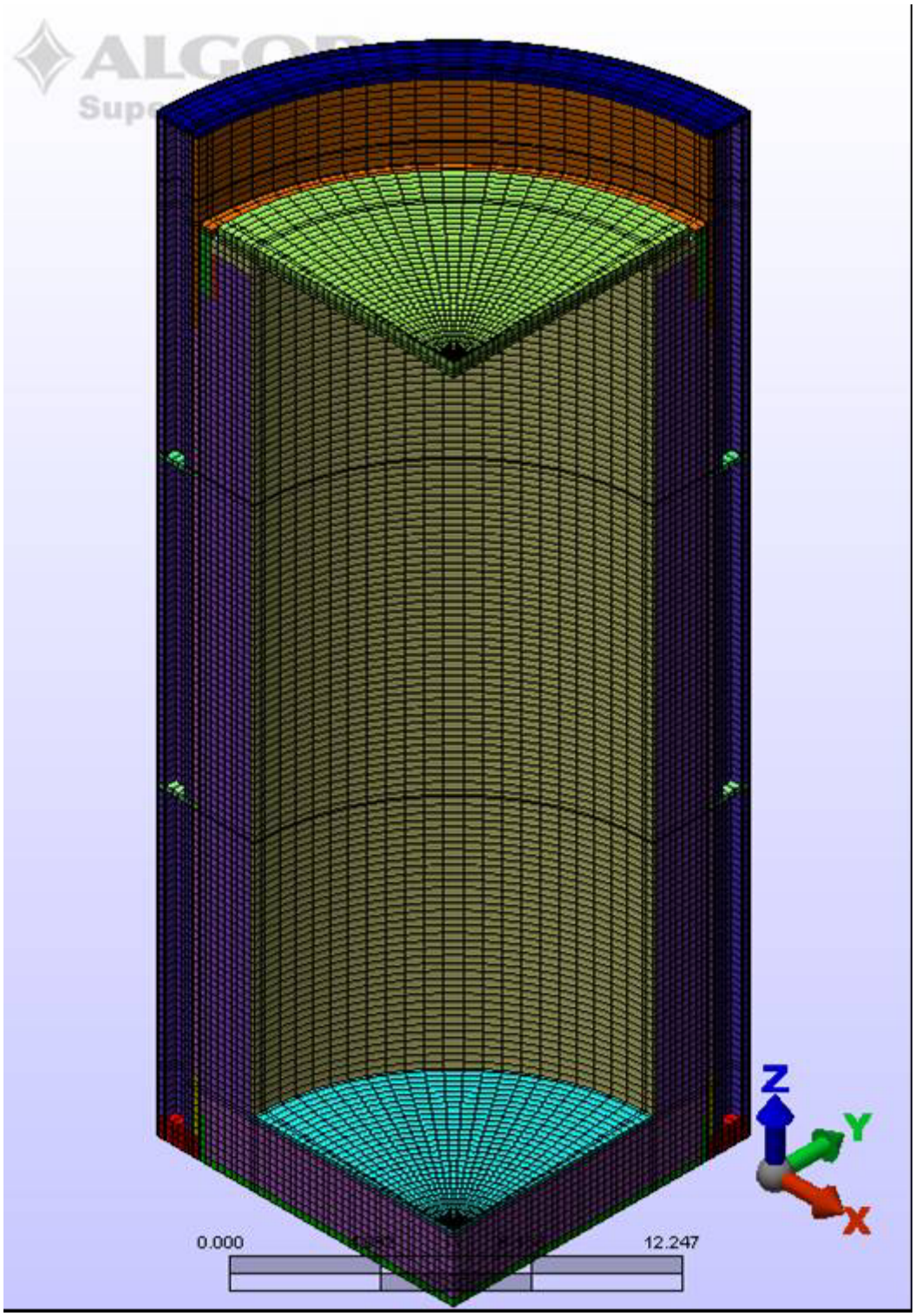

Figure 3.5.1- 7 Quarter-symmetric Thermal Model of 55-gallon Versa-Pac

(drum lid & insulation plug not shown)

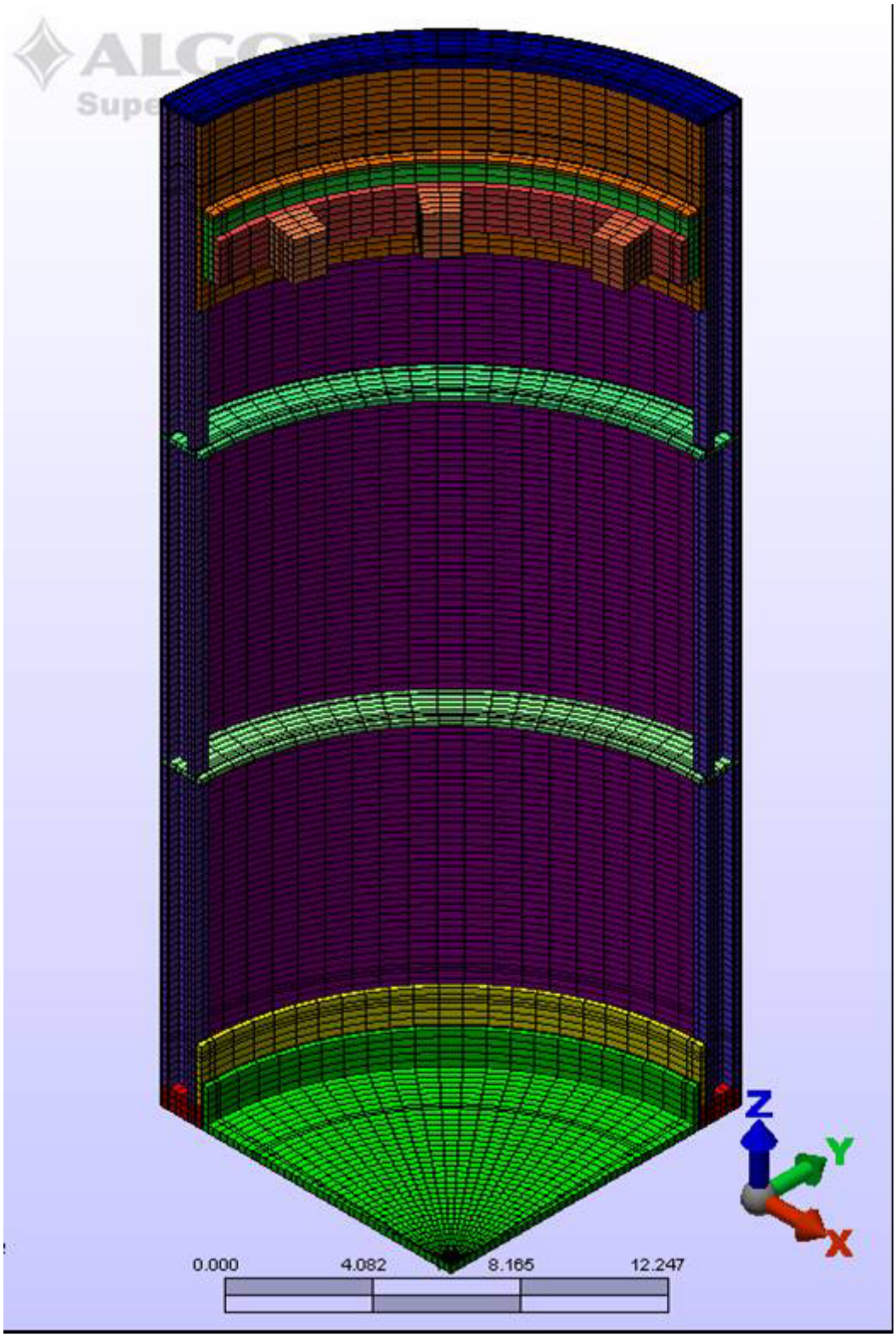

Figure 3.5.1- 8 Quarter-symmetric Thermal Model of 55-gallon Versa-Pac, External Metal structure, Fiberglass, & Payload Cavity bolting blocks (payload cavity, drum lid, insulation plug & component SA not shown)

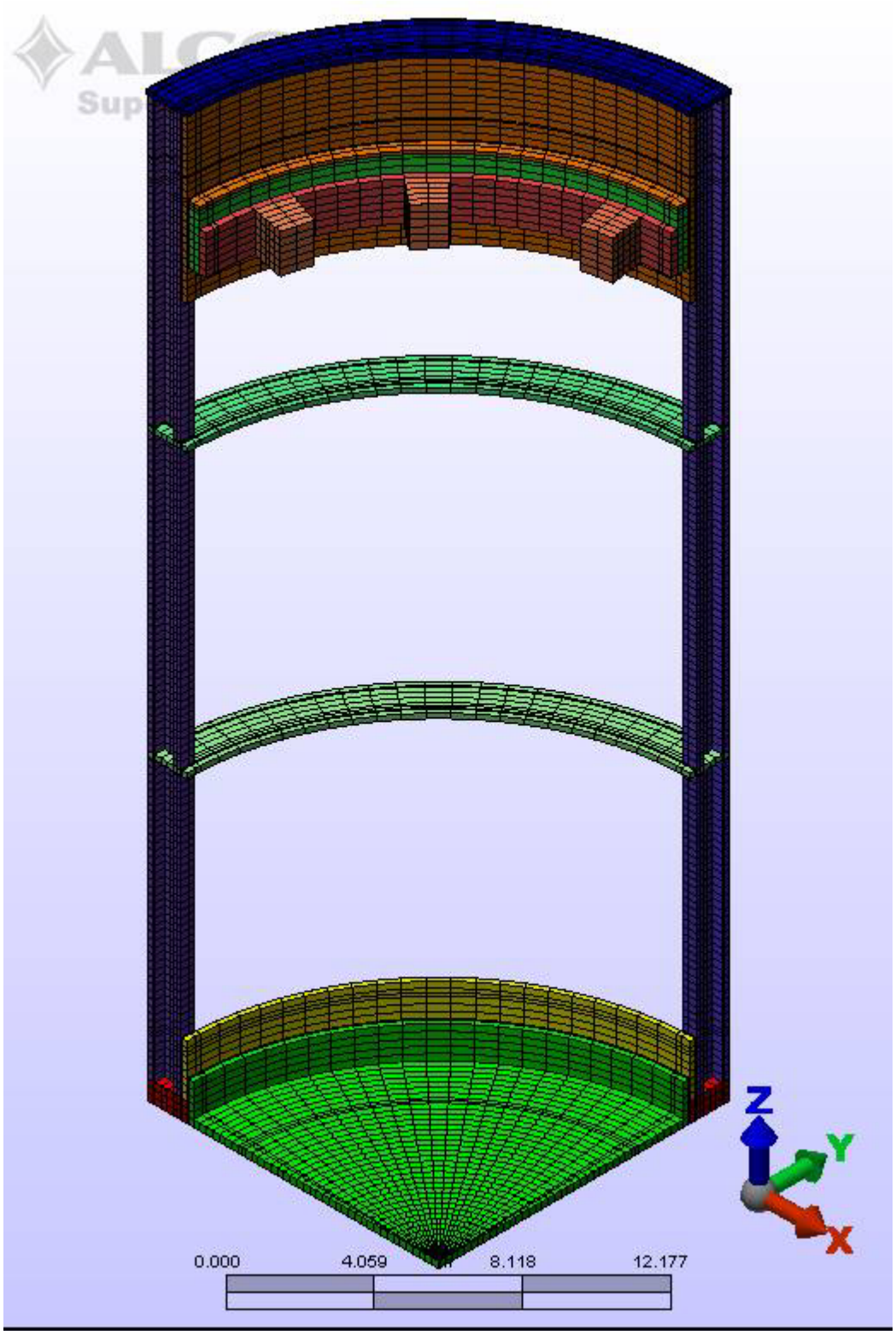

Figure 3.5.1- 9 Quarter-symmetric Thermal Model of 55-gallon Versa-Pac, Metal Reinforcing Members

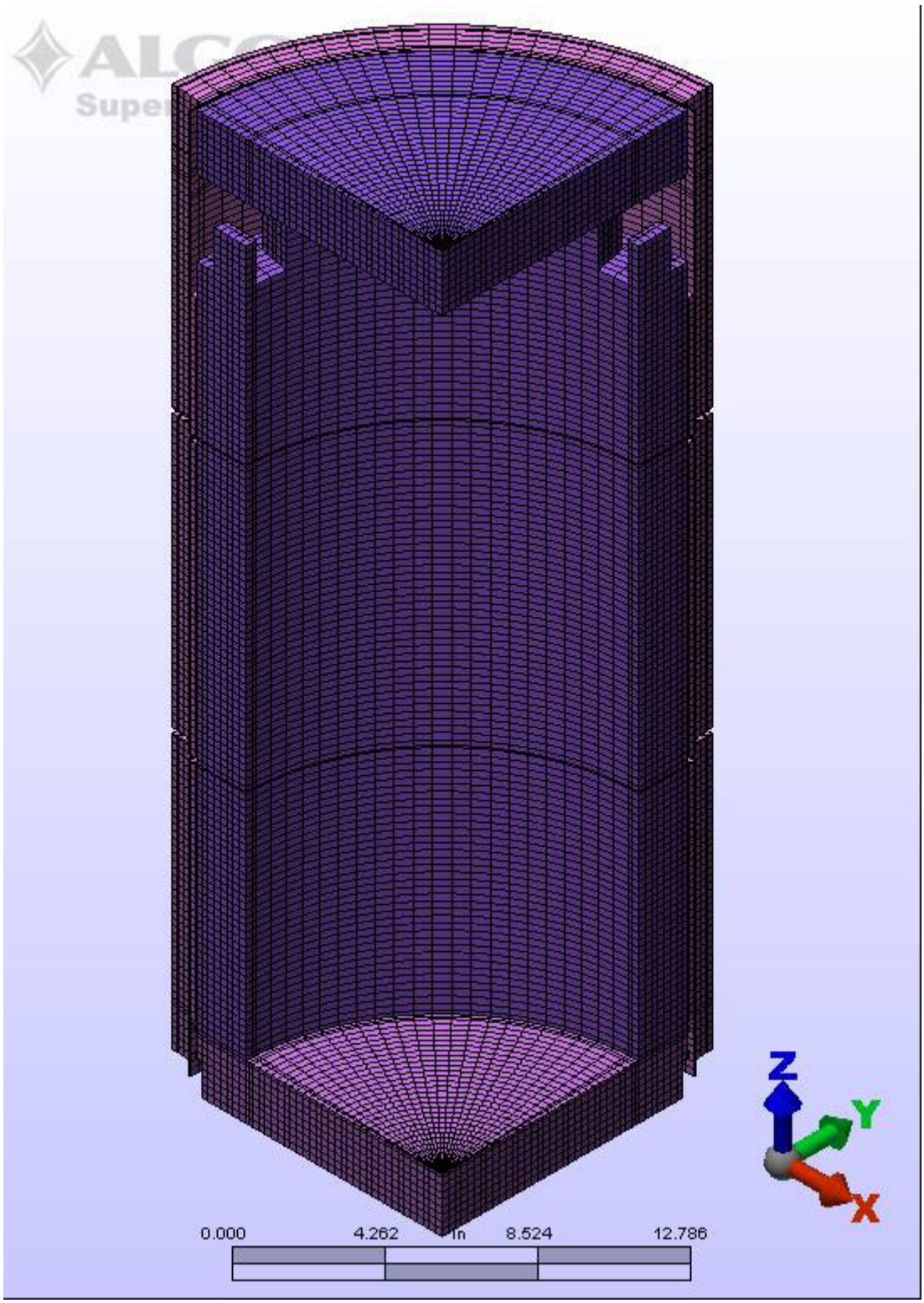

Figure 3.5.1- 10 Quarter-symmetric Thermal Model of 55-gallon Versa-Pac, Insulation

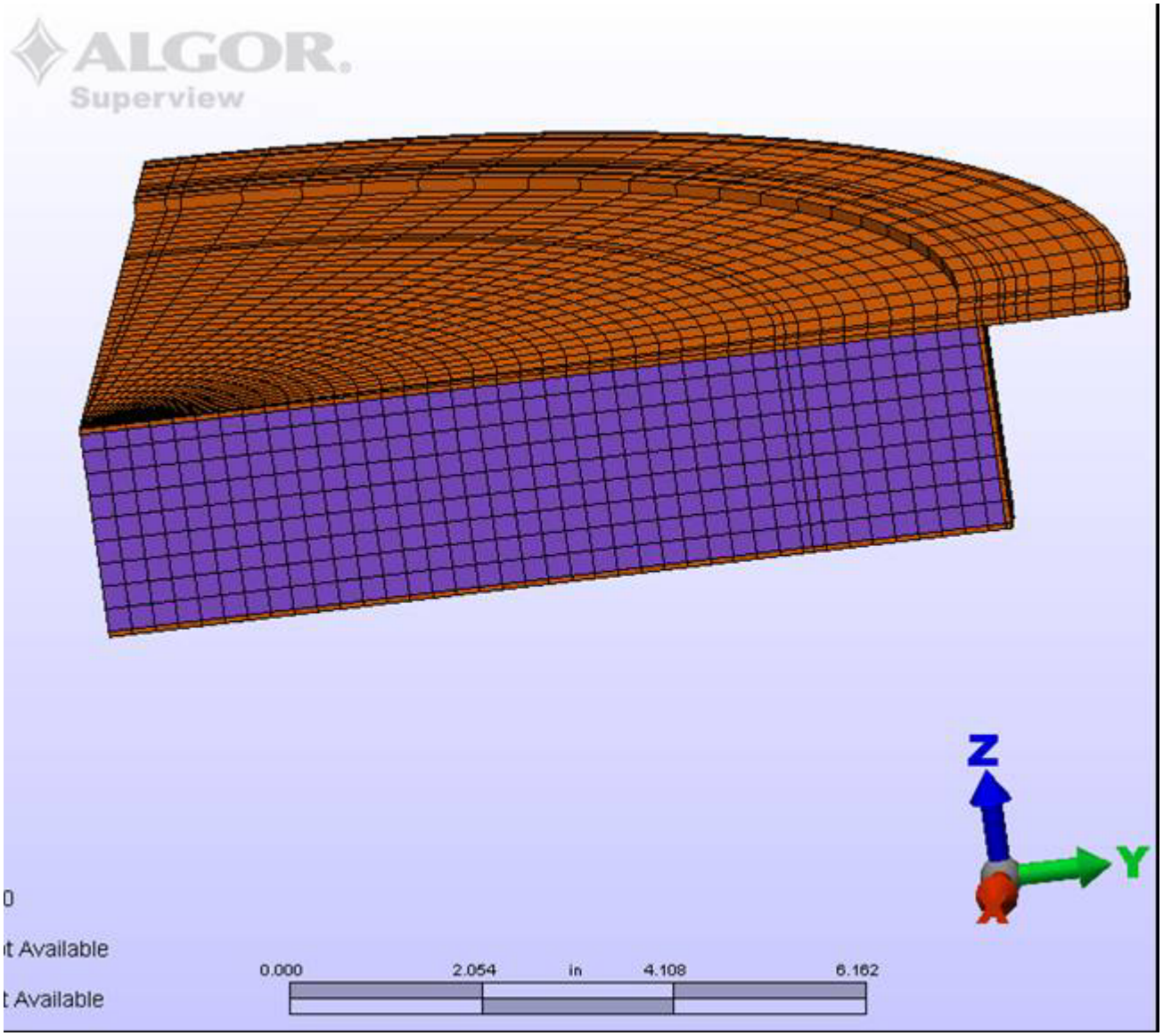

Figure 3.5.1- 11 Quarter-symmetric Thermal Model of 55-gallon Versa-Pac, Outer Lid

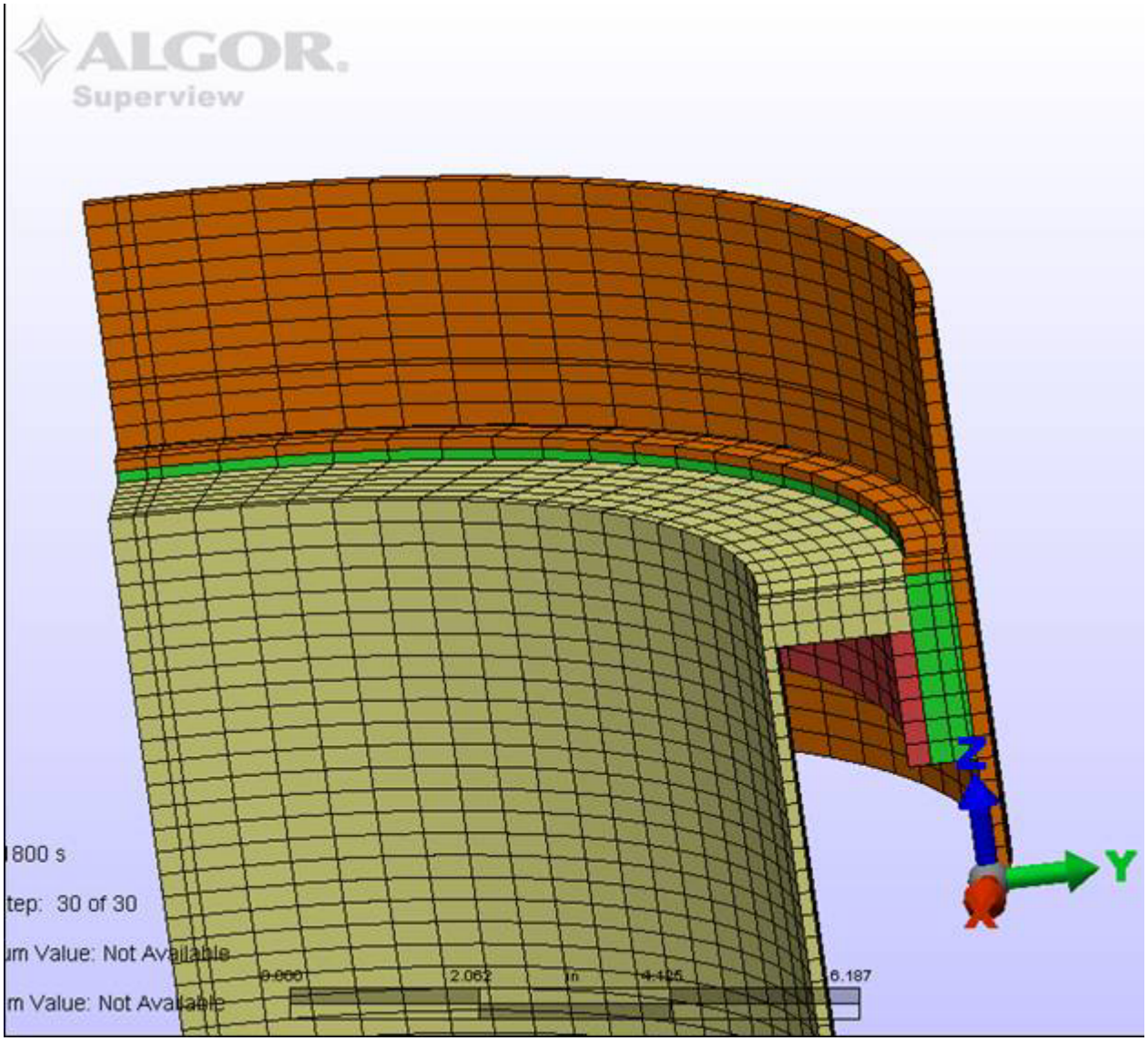

Figure 3.5.1- 12 Quarter-symmetric Thermal Model of 55-gallon Versa-Pac, Detail View, Payload Cavity, Fiberglass, and Rivet block (bolting block BB not shown)

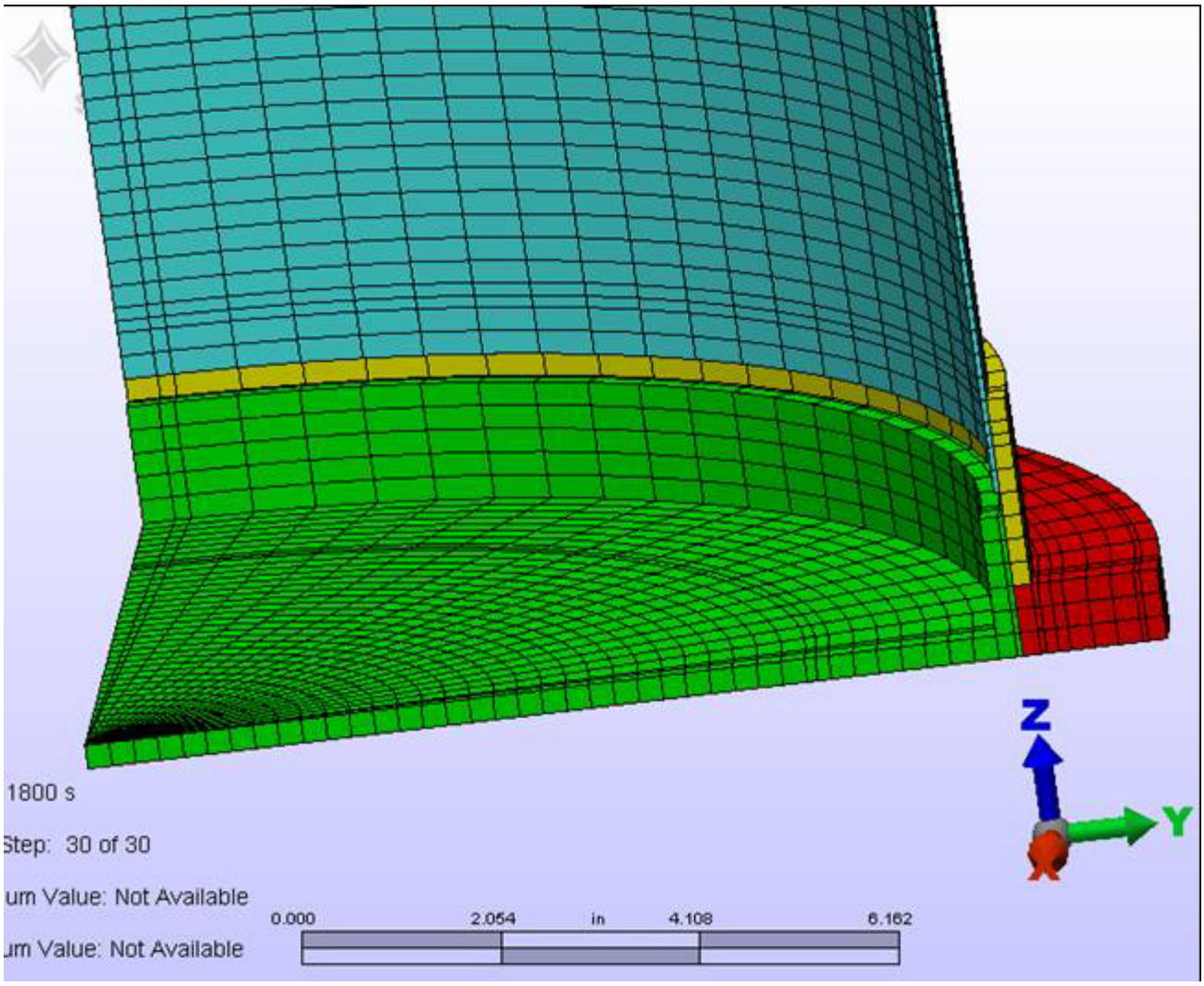

Figure 3.5.1- 13 Quarter-symmetric Thermal Model of the 55-gallon Versa-Pac, Detail View, Lower reinforcing structure

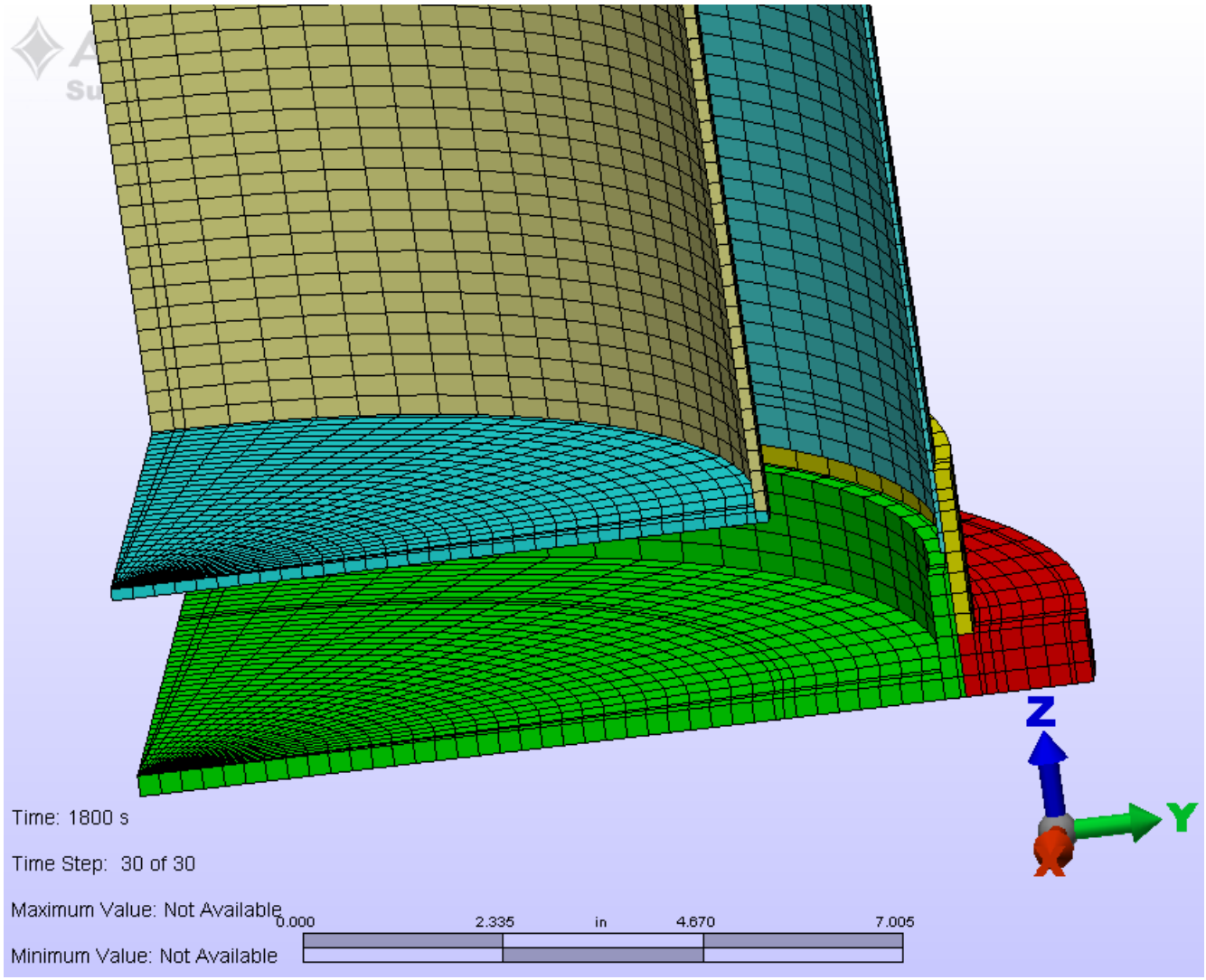

Figure 3.5.1- 14 Quarter-symmetric Thermal Model of 55-gallon Versa-Pac, Detail View, Lower Reinforcing structure with Payload Cavity shown

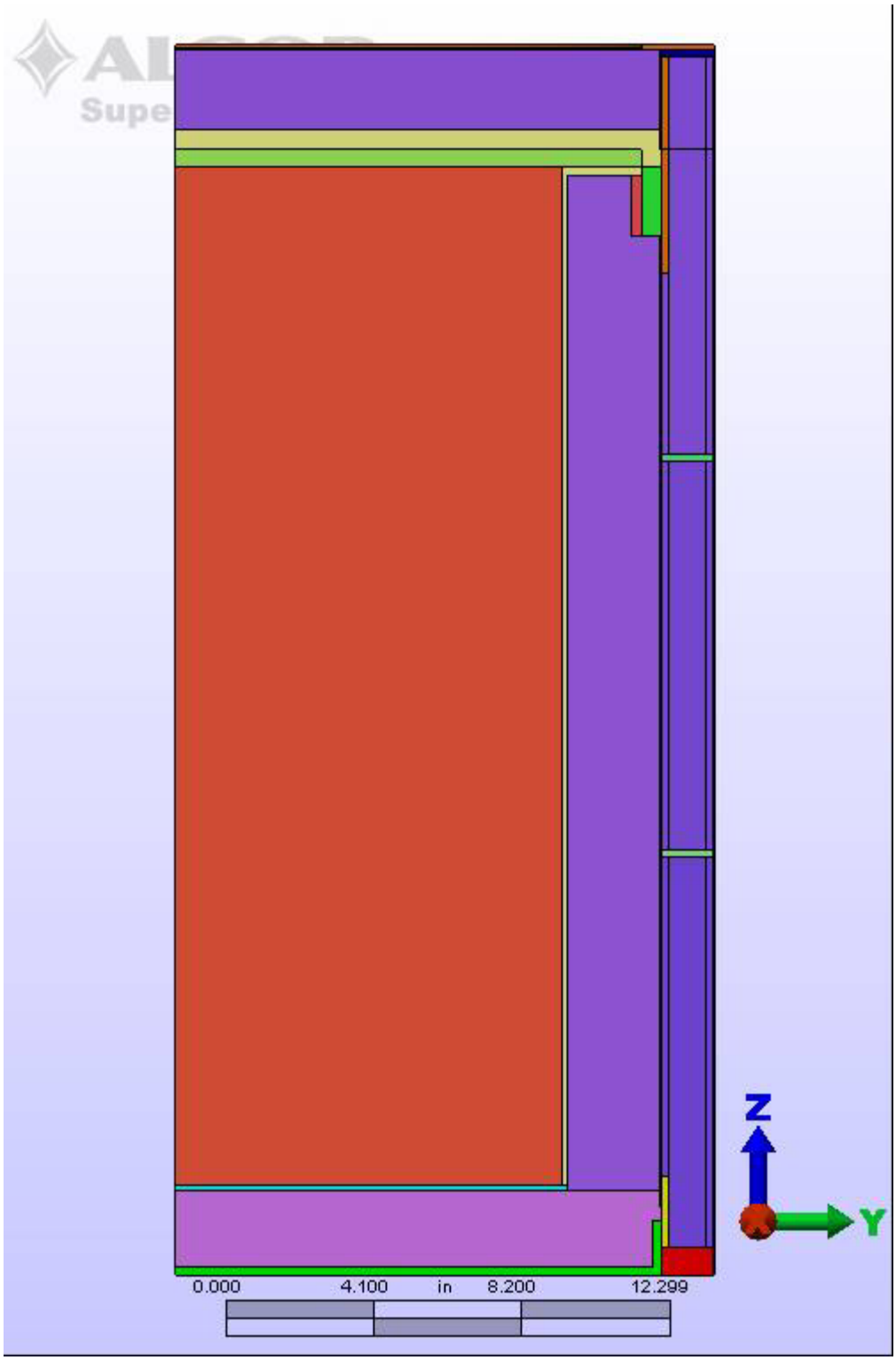

Figure 3.5.1- 15 Quarter-symmetric Thermal Model of 110-gallon Versa-Pac, all parts shown except polyurethane plug, side view