DeweyBurdPubEm Resource

From: Burrows, Ronald
Sent: Wednesday, August 25, 2010 9:45 AM
To: DeweyBurdHrgFile Resource
Subject: EPA Prescribed Procedures for Measurement of Radioactivity in Drinking Water.pdf - Adobe Reader
Attachments: EPA Prescribed Procedures for Measurement of Radioactivity in Drinking Water.pdf

Hearing Identifier: Powertech_Uranium_Dewey_Burdock_LA_Public
Email Number: 111

Mail Envelope Properties (44CD2E65B0FF0E499CB32BC30CF781F0108E913D26)

Subject: EPA Prescribed Procedures for Measurement of Radioactivity in Drinking Water.pdf - Adobe Reader
Sent Date: 8/25/2010 9:44:55 AM
Received Date: 8/25/2010 9:45:11 AM
From: Burrows, Ronald

Created By: Ronald.Burrows@nrc.gov

Recipients:
"DeweyBurdHrgFile Resource" <DeweyBurdHrgFile.Resource@nrc.gov>
Tracking Status: None

Post Office: HQCLSTR01.nrc.gov

Files	**Size**	**Date & Time**
MESSAGE	3	8/25/2010 9:45:11 AM
EPA Prescribed Procedures for Measurement of Radioactivity in Drinking Water.pdf	6598639	

Options
Priority: Standard
Return Notification: No
Reply Requested: No
Sensitivity: Normal
Expiration Date:
Recipients Received:

United States
Environmental Protection
Agency

Environmental Monitoring and Support
Laboratory
Cincinnati OH 45268

EPA-600/4-80-032
August 1980

Research and Development

EPA

Prescribed Procedures for Measurement of Radioactivity in Drinking Water

RESEARCH REPORTING SERIES

Research reports of the Office of Research and Development, U.S. Environmental Protection Agency, have been grouped into nine series. These nine broad categories were established to facilitate further development and application of environmental technology. Elimination of traditional grouping was consciously planned to foster technology transfer and a maximum interface in related fields. The nine series are:

1. Environmental Health Effects Research
2. Environmental Protection Technology
3. Ecological Research
4. Environmental Monitoring
5. Socioeconomic Environmental Studies
6. Scientific and Technical Assessment Reports (STAR)
7. Interagency Energy-Environment Research and Development
8. "Special" Reports
9. Miscellaneous Reports

This report has been assigned to the ENVIRONMENTAL MONITORING series. This series describes research conducted to develop new or improved methods and instrumentation for the identification and quantification of environmental pollutants at the lowest conceivably significant concentrations. It also includes studies to determine the ambient concentrations of pollutants in the environment and/or the variance of pollutants as a function of time or meteorological factors.

This document is available to the public through the National Technical Information Service, Springfield, Virginia 22161.

DATE: March 19, 1981

SUBJECT: Errata Sheet for the Manual, "Prescribed Procedures for Measurement of Radioactivity in Drinking Water," EPA-600/4-80-032, August 1980, Environmental Monitoring and Support Laboratory, Cincinnati, Ohio 45268

Page 5, 1st line. Change (dpm/cpm) to (cpm/dpm).

Page 8, Section 10.4., second line. Change the spelling to "laboratory."

Page 13, Section 9.3, change the "R" to "P".

Page 19, Add "summation sign (Σ)" to

$$\sqrt{\frac{\Sigma x^2 - \frac{(\Sigma x)^2}{N}}{N-1}}$$

Page 27, Delete 5.1.

Page 28, Delete 7.1 and 7.2 and replace with:

7.1 With commercially available calibrated standards, geometric configurations are to be prepared comparable to the final separated sample so that the efficiency factors (cpm/dpm) for the beta and the beta-gamma coincidence counters can be determined.

Page 46, Section 9.1, Change " $\frac{t_3}{1-e^{-\lambda t_3}}$ " to " $\frac{\lambda t_3}{1-e^{-\lambda t_3}}$ "

Page 52, Section 8. Delete the superscript "1".

Page 53, Step 8.16. Delete "discard supernate" and substitute "add to supernate in beaker from step 8.15 for Barium yield."

Page 63, Step 8.9 - 4th line. Delete "5 ml 15N NH_4OH" and substitute "6N NH_4OH dropwise to the alkaline endpoint of phenolphthalein."

Page 64, Disregard note after Step 8.9.

Page 65, Step 8.14. Delete "10 ml 15N NH_4OH to the centrifuge tube" and substitute "6N NH_4OH dropwise to the alkaline endpoint of phenolphthalein."

Page 68, Add to top of page, a = strontium recovery factor, b = yttrium recovery factor.

Page 77, Section 7.1.1, line 4 and 5. Delete "and standard tritium activity."

Page 87, Section 6.9. Change 50.4g to 90.4g.

☆ U.S. GOVERNMENT PRINTING OFFICE: 1981 757-012/7065

DATE: March 19, 1981

SUBJECT: Errata Sheet for the Manual, "Prescribed Procedures for Measurement of Radioactivity in Drinking Water," EPA-600/4-80-032, August 1980, Environmental Monitoring and Support Laboratory, Cincinnati, Ohio 45268

Page 5, 1st line. Change (dpm/cpm) to (cpm/dpm).

Page 8, Section 10.4., second line. Change the spelling to "laboratory."

Page 13, Section 9.3, change the "R" to "P".

Page 19, Add "summation sign (Σ)" to

$$\sqrt{\frac{\Sigma x^2 - \frac{(\Sigma x)^2}{N}}{N-1}}$$

Page 27, Delete 5.1.

Page 28, Delete 7.1 and 7.2 and replace with:

7.1 With commercially available calibrated standards, geometric configurations are to be prepared comparable to the final separated sample so that the efficiency factors (cpm/dpm) for the beta and the beta-gamma coincidence counters can be determined.

Page 46, Section 9.1, Change " $\frac{t_3}{1-e^{-\lambda t_3}}$ " to " $\frac{\lambda t_3}{1-e^{-\lambda t_3}}$ "

Page 52, Section 8. Delete the superscript "1".

Page 53, Step 8.16. Delete "discard supernate" and substitute "add to supernate in beaker from step 8.15 for Barium yield."

Page 63, Step 8.9 - 4th line. Delete "5 ml 15N NH_4OH" and substitute "6N NH_4OH dropwise to the alkaline endpoint of phenolphthalein."

Page 64, Disregard note after Step 8.9.

Page 65, Step 8.14. Delete "10 ml 15N NH_4OH to the centrifuge tube" and substitute "6N NH_4OH dropwise to the alkaline endpoint of phenolphthalein."

Page 68, Add to top of page, a = strontium recovery factor, b = yttrium recovery factor.

Page 77, Section 7.1.1, line 4 and 5. Delete "and standard tritium activity."

Page 87, Section 6.9. Change 50.4g to 90.4g.

☆ U.S. GOVERNMENT PRINTING OFFICE: 1981 757-012/7065

EPA-600/4-80-032
August 1980

PRESCRIBED PROCEDURES FOR MEASUREMENT OF RADIOACTIVITY IN DRINKING WATER

by

Herman L. Krieger
Radiochemical Methods Section
Physical and Chemical Methods Branch
Environmental Monitoring and Support Laboratory
Cincinnati, Ohio 45268

and

Earl L. Whittaker
Quality Assurance Division
Environmental Monitoring Systems Laboratory
Las Vegas, Nevada 89114

ENVIRONMENTAL MONITORING AND SUPPORT LABORATORY
OFFICE OF RESEARCH AND DEVELOPMENT
U.S. ENVIRONMENTAL PROTECTION AGENCY
CINCINNATI, OHIO 45268

DISCLAIMER

This report has been reviewed by the Environmental Monitoring and Support Laboratory, U.S. Environmental Protection Agency, and approved for publication. Mention of trade names or commercial products does not consitute endorsement or recommendation for use.

FOREWORD

Man and his environment must be protected from the adverse effects of pesticides, radiation, noise, and other forms of pollution, and the unwise management of solid waste. Efforts to protect the environment require a focus that recognizes the interplay between the components of our physical environment--air, water, and land. The Environmental Monitoring and Support Laboratory contributes to this multidisciplinary focus through programs engaged in:

- studies on the effects of environmental contaminants on the biosphere, and
- a search for ways to prevent contamination and to recyle valuable resources.

The Drinking Water Regulations describe the maximum allowable contaminant levels for a variety of pollutants in drinking water. This updated edition of the manual has been developed by the staffs of the Radiochemical Methods Section, Physical and Chemical Methods Branch, Environmental Monitoring and Support Laboratory-Cincinnati, and the Quality Assurance Division, Environmental Monitoring Systems Laboratory-Las Vegas, to supply the methodology for monitoring the quality of drinking water for the radionuclide pollutants. In detail, it describes the appropriate analytical procedures and includes the quality assurance results that were obtained from collaborative test studies, and from single laboratory replicate analyses.

Dwight G. Ballinger, Director
Environmental Monitoring and Support
Laboratory - Cincinnati

Glenn E. Schweitzer, Director
Environmental Monitoring Systems
Laboratory - Las Vegas

ABSTRACT

Appropriate radiochemical procedures have been compiled in a laboratory manual for use in the analysis of gross alpha activity, gross beta activity, cesium-134, cesium-137, iodine-131, radium-226, radium-228, strontium-89, strontium-90, tritium, uranium and the actinide elements, in drinking water. These methods possess the necessary sensitivity for achieving the maximum contaminant levels recommended by the U.S. Environmental Protection Agency in its Interim Primary Drinking Water Regulations. The method capabilities and minimum detection levels have been determined by replicate testing, by an internal quality assurance program, and collaborative test studies specifically designed for these nuclides.

PREFACE

The U.S. Environmental Protection Agency has published Primary Drinking Water Regulations for Radioactivity under the Safe Drinking Water Act, (Pub. L. 93-523). These proposed maximum contaminant levels limit the concentrations of natural and man-made radioactivity in drinking water supplies and set forth the proposed monitoring and measurement requirements.

Recognizing the need for a collection of analytical methods that can be used for measuring each of these radionuclides in drinking water, the Radiochemical Methods Section, Environmental Monitoring and Support Laboratory-Cincinnati, and the Quality Assurance Division, Environmental Monitoring Systems Laboratory-Las Vegas, have brought together methods from a variety of sources for the analysts and technicians having responsibility for the analysis of drinking water supplies.

As will be evident from the Method Capabilities section of the manual, Appendix A, the sensitivity of each of the procedures complies with the promulgated limits. The determination of the standard deviations in the counting rate is given in Appendix B, and the formulae for determining the necessary counting time for the required detection limit are indicated in Appendix C. These operator-tested procedures have been selected from a number of radiochemical methodology collections, (1-5) and can be utilized for routine analysis. Several of them have already been published as "standard reference methods" by recognized standard-setting organizations such as ASTM and APHA.

Factors considered in selecting these procedures for inclusion in this laboratory manual were procedure time, method capabilities, and reliability. In those cases where modifications were deemed essential, additional steps such as scavenging or other purification techniques have been included in the procedures. The precision and accuracy of each method as determined from collaborative test results or replicate single laboratory test results, are included at the end of each procedure.

Drinking water is collected at designated sampling points according to a sampling protocol. Although some analyses (^{3}H and ^{131}I) specify that the collected sample be unacidified, it is recommended that for routine screening tests the sample be acidified at the time of collection to minimize losses caused by adsorption on container walls. Radiochemical analysis should be performed immediately upon receipt of sample, so that radioactive decay losses, primarily for ^{131}I, are minimized. Specifications for laboratory apparatus, sources of equipment and laboratory counting instruments are indicated in Appendices D, E, and F.

Revisions or additions to these methods are solicited.

References

1. Krieger, H. L. and S. Gold. Procedures for Radiochemical Analysis of Nuclear Reactor Aqueous Solutions. EPA-R4-73-014, National Environmental Research Center, U. S. Environmental Protection Agency, Cincinnati, Ohio (May 1973).

2. 1979 Annual Book of ASTM Standards, Part 31. American Society for Testing and Materials, Philadelphia, PA. (1979).

3. Harley, J. H., ed. EML Procedures Manual, HASL-300, Env. Meas. Lab, U.S. DOE, New York, NY. (1972).

4. Nuclear Science Series, USAEC Rept. NAS-NS-301 to NAS-NS-3111 (1960-1974).

5. Standard Methods for the Examination of Water and Waste Water, 14th ed. American Public Health Association, Washington, D. C. (1976).

CONTENTS

Page

Foreword.....iii
Abstract..... iv
Preface..... v
Figures.....viii
Acknowledgment..... ix

Prescribed Procedures For Radioactivity in Drinking Water:

1. Gross Alpha and Gross Beta Radioactivity.....Method 900.0 1
2. Gross Radium Alpha Screening Procedure.....Method 900.1 10
3. Radioactive Cesium.....Method 901.0 15
4. Gamma Emitting Radionuclides.....Method 901.1 21
5. Radioactive Iodine.....Method 902.0 26
6. Alpha-Emitting Radium Isotopes.....Method 903.0 31
7. Radium-226 - Radon Emanation Technique.....Method 903.1 38
8. Radium-228.....Method 904.0 49
9. Radioactive Strontium.....Method 905.0 58
10. Tritium.....Method 906.0 75
11. Actinide Elements (Tentative).....Method 907.0 83
12. Uranium - Radiochemical Method.....Method 908.0 96
13. Uranium - Fluorometric Method.....Method 908.1 103

Appendices

A. Method Capabilities - Precision and Accuracy Summary.....110
B. Error and Statistical Calculations.....112
C. Determination of Counting Time for Required Sensitivity.....114
D. Laboratory Apparatus Specifications.....125
E. Representative Sources of Laboratory Supplies.....128
F. Representative Sources of Laboratory Counting Instruments.....131

FIGURES

Number		Page
1	Radon emanation apparatus with scintillation cell	39
2	A typical radon bubbler	41
3	A typical scintillation cell for radon counting	42
4	The growth of radon-222 from radium-226	45
5	Distillation apparatus for tritium analysis	79
6	Generalized chemical procedure (for actinide elements)	84

ACKNOWLEDGMENT

In 1975, the Radiochemistry and Nuclear Engineering Branch of the Environmental Monitoring and Support Laboratory, EPA, prepared the earlier edition of this manual. This updated edition has been compiled by the Radiochemical Methods Section, Physical and Chemical Methods Branch, Environmental Monitoring and Support Laboratory - Cincinnati, and the Quality Assurance Division, Environmental Monitoring Systems Laboratory - Las Vegas. It includes quality assurance certification from collaborative study results and single-laboratory replicate test findings, and is intended for use by agencies responsible for monitoring drinking water for radioactive contamination. Seymour Gold, George W. Frishkorn, Betty Jacobs, and Eleanor Martin were responsible for the thorough testing of these procedures and for recommending modifications so that they meet the promulgated limits. Richard J. Velten and Jasper Kearney designed and activated the internal quality assurance testing program to substantiate the validity of several procedures. The collaborative study program was planned and evaluated by members of the Quality Assurance Division, Environmental Monitoring Systems Laboratory-Las Vegas under the supervision of D. G. Easterly. Editorial comments and suggestions for improvement in the clarity of the manual were submitted by Dr. Bernd Kahn, Environmental Resources Center, Georgia Institute of Technology, Atlanta, Georgia; Robert Lieberman, Eastern Environmental Radiation Laboratory, Montgomery, Alabama; Art Jarvis, Environmental Monitoring Systems Laboratory-Las Vegas, Nevada; Dr. Abraham S. Goldin, Surveillance Branch, EAD, ORP, USEPA, Washington, D. C; Dr. Daniel Montgomery, USNRC, Atlanta, Georgia; Dr. Carl Bishop, Monsanto Research Corporation, Miamisburg, Ohio; and Ernest J. Lang, Allied-General Nuclear Services, Barnwell, South Carolina. Their assistance is gratefully acknowledged.

SECTION 1
GROSS ALPHA AND GROSS BETA RADIOACTIVITY IN DRINKING WATER
METHOD 900.0

1. Scope and Application

1.1 This method covers the measurement of gross alpha and gross beta particle activities in drinking water. The method is a screening technique for monitoring drinking water supplies for alpha and beta particle activities according to the limits set forth under the Safe Drinking Water Act, PL 93-523, 40 FR 34324, and thereby determining the necessity for further analysis.

1.2 The method is applicable to the measurement of alpha emitters having energies above 3.9 megaelectronvolts (MeV) and beta emitters having maximum energies above 0.1 MeV.

1.3 The minimum limit of concentration to which this method is applicable depends on sample size, counting system characteristics, background, and counting time. The National Primary Interim Drinking Water Regulations (NIPDWR) require a gross beta detection limit of 4 pCi/l, an alpha detection limit of 1 pCi/l for compliance with Part 141.15(a) and a gross alpha detection limit of 3 pCi/l for compliance with Part 141.15(b).

1.4 Since, in this method for gross alpha and gross beta measurement, the radioactivity of the sample is not separated from the solids of the sample, the solids concentration is very much a limiting factor in the sensitivity of the method for any given water sample. Also, for samples with very low concentrations of radioactivity such as from drinking water sources, it is essential to analyze as large a sample aliquot as is needed to give reasonable counting times in meeting the required sensitivities (detection limits) indicated above. The Regulations define sensitivity in terms of detection limits Part 141.25(c) of the Regulations .

1.5 The largest sample aliquot that should be counted for gross alpha activity is that size aliquot which gives a solids density thickness of 5 mg/cm^2 in the counting planchet. For a 2-inch diameter counting planchet (20 cm^2), an aliquot containing 100 mg of dissolved solids would be the maximum aliquot size for that sample which should be evaporated and counted for gross alpha activity.

1.6 When the concentration of total dissolved solids (TDS) is known for a given water sample and the alpha background and the counting efficiency of a given counting system are known, the counting time that is needed to meet the required sensitivity (3 pCi/l) can be determined by equations given in Appendix C.

1.7 For the counting of gross beta activity in a water sample the TDS is not as limiting as for gross alpha activity because beta particles are not stopped in solids as easily as are alpha particles. Very often a single sample aliquot is evaporated and counted for both gross alpha and gross beta activity. In that case the sample aliquot size would be dictated by the solids limitations for alpha particles. For water samples that are to be counted for gross beta activity, equations in Appendix C can also be used to determine the necessary counting time to meet a sensitivity for gross beta activity (4 pCi/l required by NIPDWR).

1.8 Radionuclides that are volatile under the sample preparation conditions of this method will not be measured. In some areas of the country the nitrated water solids (sample evaporated with nitric acid present) will not remain at a constant weight after being dried at 105°C for two hours and then exposed to the atmosphere before and during counting. Other radioactivities may also be lost during the sample evaporation and drying at 105°C (such as some chemical forms of radioiodine). Those types of water samples need to be heated to a dull red heat for a few minutes to convert the salts to oxides. Sample weights are then usually sufficiently stable to give consistent counting rates and a correct counting efficiency can then be assigned. Some radioactivities, such as the cesium radioisotopes, may be lost when samples are heated to dull red color. Such losses are limitations of the test method.

1.9 This method provides a rapid screening measurement to indicate whether specific analyses are required. For drinking waters with an extremely high solids content (>500 ppm), method 900.1 is recommended.

2. Summary of Method

2.1 An aliquot of a preserved drinking water sample is evaporated to a small volume and transferred quantitatively to a tared 2-inch stainless steel counting planchet. The sample residue is dried to constant weight, reweighed to determine dry residue weight, then counted for alpha and/or beta radioactivity.

2.2 Counting efficiencies for both alpha and beta particle activities are selected according to the amount of sample solids from counting efficiency vs sample solids standard curves.

3. Sample Handling and Preservation

3.1 A representative sample must be collected from a free-flowing source of drinking water, and should be large enough so that adequate aliquots can be taken to obtain the required sensitivity.

3.2 It is recommended that samples be preserved at the time of collection by adding enough 1N HNO_3 to the sample to bring it to pH 2 (15 ml 1N HNO_3 per liter of sample is usually sufficient.) If samples are to be collected without preservation, they should be brought to the laboratory within 5 days, then preserved and held in the original container for a minimum of 16 hours before analysis or transfer of the sample.

3.3 The container choice should be plastic over glass to prevent loss due to breakage during transportation and handling.

4. Interferences

4.1 Moisture absorbed by the sample residue is an interference as it obstructs counting and self-absorption characteristics. If a sample is counted in an internal proportional counter, static charge on the sample residue can cause erratic counting, thereby preventing an accurate count.

4.2 Non-uniformity of the sample residue in counting planchet interferes with the accuracy and precision of the method.

4.3 Sample density on the planchet area should be not more than 5 mg/cm^2 for gross alpha and not more than 10 mg/cm^2 for gross beta.

4.4 When counting alpha and beta particle activity by a gas flow proportional counting system, counting at the alpha plateau discriminates against beta particle activity, whereas counting at the beta plateau is sensitive to alpha particle activity present in the sample. This latter effect should be determined and compensated for during the calibration of the specific instrument being used.

5. Apparatus - See Appendix D for details and specifications.

5.1 Gas-flow proportional counting system, or

5.2 Scintillation detector system

5.3 Stainless steel counting planchets

5.4 Electric hot plate

5.5 Drying oven

5.6 Drying lamp

5.7 Glass desiccator

5.8 Glassware

5.9 Analytical balance

6. Reagents

All chemicals should be of "reagent-grade" or equivalent whenever they are commercially available.

6.1 Distilled or deionized water having a resistance value between 0.5 and 2.0 megohms (2.0 to 0.5 micromhos)/cm at 25°C.

6.2 Nitric acid, 1N: Mix 6.2 ml 16N HNO_3 (conc.) with deionized or distilled water and dilute to 100 ml.

7. Calibrations

7.1 For absolute gross alpha and gross beta measurement, the detectors must be calibrated to obtain the ratio of count rate to disintegration rate. Americium-241 (used for alpha activity in the collaborative test of this method) has higher alpha particle energy (5.49 MeV) than those emitted by the naturally occurring uranium and radium-226 radionuclides but is close to the energy of the alpha particles emitted by naturally occurring thorium-228 and radium-224. Standards should be prepared in the geometry and weight ranges to be encountered in these gross analyses. It is, therefore, the prescribed radionuclide for gross alpha calibration. NBS or NBS-traceable americium-241 is available from Standard Reference Materials Catalog, NBS Special Publications 260, U.S. Department of Commerce (1976), and from Quality Assurance Branch, EMSL-LV, P.O. Box 15027, Las Vegas, Nevada 89114.

7.2 Strontium-90 and cesium-137 have both been used quite extensively as standards for gross beta activity. Standard solutions of each of these radionuclides are readily available. Cesium is volatile at elevated temperatures (above 450°C). Some water supplies have dissolved solids (salts) that, when converted to nitrate salts, are quite hygroscopic and need to be converted to oxides by heating to red heat to obtain sample aliquots that are weight-stable. Sample weight stability is essential to gross alpha and gross beta measurements to ensure the accuracy of the self-absorption counting efficiency factor to be used for the samples. Strontium-90 in equilibrium with its daughter yttrium-90 is the prescribed radionuclide for gross beta calibrations.

7.3 For each counting instrument to be used, the analyst should prepare separate alpha and beta particle self-absorption graphs showing water sample residue weight (mg) vs the efficiency factor

(dpm/cpm), using standard alpha and beta emitter solutions and tap water. For the alpha graph standard, alpha activity is added to varying size aliquots of tap water, such that the aliquot residue weight is varied between 0 and 100 mg (for a 2-inch counting planchet). A similar graph is prepared with standard beta activity and tap water aliquots, varying the residue weight between 0 and 300 mg (for a 2-inch planchet). If it is planned to use water sample aliquot volumes that always contain 100 mg of dried water solids, then only the efficiency factor for that residue weight needs to be established.

7.4 Tap water aliquots with added americium-241 or strontium-90 standard, should be acidified with a few ml 16N HNO_3, evaporated to a small volume in a beaker on a hot plate, transferred quantitatively in 5 ml portions or less to a tared counting planchet, evaporated to dryness, and finally dried at 105°C for 2 hours (or flamed to a red heat if dried solids appear to be noticeably hygroscopic). Weight-stable aliquot residues should then be alpha and/or beta counted until at least 10,000 total counts have been accumulated. A single set of reference standards prepared in this way can be used for each counting instrument for separate graph preparations and can be stored for reverification whenever needed.

8. Procedure

8.1 Transfer to a beaker an aliquot of a water sample of a volume size that contains no more than 100 mg (for alpha only or alpha and beta determination) or 200 mg (for beta only determination) of total water solids. Evaporate the aliquot to near dryness on a hot plate. If water samples are known or suspected to contain chloride salts, those chloride salts should be converted to nitrate salts before the sample residue is transferred to a stainless steel planchet (Chlorides will attack stainless steel and increase the sample solids and no correction can be made for those added solids). Chloride salts can be converted to nitrate salts by adding 5 ml portions of 16N HNO_3 to the sample residue and evaporating to near dryness. (Two treatments are usually sufficient.) Add 10 ml 1N HNO_3 to the beaker and swirl to dissolve the residue. Quantitatively transfer the aliquot concentrate in small portions (not more than 5 ml at a time) to a tared planchet, evaporating each portion to dryness.

8.2 Dry the sample residue in a drying oven at 105°C for at least 2 hours; cool in a desiccator; weigh; and count. Store the sample residue in a desiccator until ready for counting.

8.3 Some types of water dissolved solids, when converted to nitrate salts, are quite hygroscopic even after being dried at 105°C for two hours. When such hygroscopic salts are present with samples that are put into an automatic counting system, those samples gain weight while they are waiting to be counted and inaccurate counting

data result. When there is evidence of hygroscopic salts in sample counting planchets, it is recommended that they be flamed to a dull red heat with a Meeker burner for a few minutes to convert the nitrate salts to oxides before weighing and counting.

8.4 Count for alpha and beta activity at their respective voltage plateaus. If the sample is to be recounted for reverification, store it in a desiccator.

Note: As long as counting chambers are capable of handling the same size planchet, alpha and beta activity can be determined at their respective voltage plateaus in the designated counting instruments. Keep planchet in the desiccator until ready to count because vapors from moist residue can damage detector and window and can cause erratic measurements. Samples may be counted for beta activity immediately after drying; but alpha counting should be delayed at least 72 hours until equilibrium has occurred. If the gas-flow internal proportional counter does not discriminate for the higher energy alpha pulses at the beta plateau, the alpha activity must be subtracted from the beta plus alpha activity. This is particularly important for samples with high alpha activity.

9. Calculations

9.1 Calculate the alpha radioactivity by the following equation:

$$\text{Alpha (pCi/liter)} = \frac{A \times 1000}{2.22 \times C \times V}$$

where:

A = net alpha count rate (gross alpha count rate minus the background count rate)at the alpha voltage plateau,
C = alpha efficiency factor, read from graph of efficiency versus mg of water solids per cm^2 of planchet area, (cpm/dpm),
V = volume of sample aliquot, (ml),and
2.22 = conversion factor from dpm/pCi

9.2 Calculate the beta radioactivity by the following equations:

9.2.1 If there are no significant alpha counts when the sample is counted at the alpha voltage plateau, the beta activity can be determined from the following equation:

$$\text{Beta (pCi/liter)} = \frac{B \times 1000}{2.22 \times D \times V}$$

where:

B = net beta count rate (gross count rate minus the background count rate at the beta voltage plateau),
D = beta efficiency factor, read from the graph of efficiency versus mg of water solids per cm^2 of planchet area, (cpm/dpm),
V = volume of sample aliquot, (ml), and
2.22 = conversion factor from dpm/pCi

9.2.2 When counting beta radioactivity in the presence of alpha radioactivity by gas-flow proportional counting systems (at the beta plateau) alpha particles are also counted. Since alpha particles are more readily absorbed by increasing sample thickness than beta particles, the alpha/beta count ratios vary with increasing sample thickness. Therefore, it is necessary to prepare a calibration curve by counting standards containing americium-241 with increasing thickness of solids on the alpha plateau and then on the beta plateau, plotting the ratios of the two counts vs density thickness. The alpha amplification factor (E) from that curve is used to correct the amplified alpha count on the beta plateau. When significant alpha activity is indicated by the sample count at the alpha voltage plateau, the beta activity of the sample can be determined by counting the sample at the beta voltage plateau and calculating the activity from the following equation:

$$\text{Beta (pCi/liter)} = \frac{(B - AE) \times 1000}{2.22 \times D \times V}$$

where:
B = (as defined above)
D = (as defined above)
A = (as defined above)
E = alpha amplification factor, read from the graph of the ratio of alpha counted at the beta voltage/alpha counted at the alpha voltage vs sample density thickness, and
V = volume of sample aliquot, (ml), and
2.22 = conversion factor from dpm/pCi.

9.4 Errors associated with the results of the analysis should also be reported. (See Appendix B for error and statistical calculations).

10. Precision and Accuracy

10.1 In an interlaboratory collaborative test of the method, three sets of samples were analyzed by 18 laboratories for gross alpha and gross beta activity. The samples were prepared with dissolved water solids with known additions of americium-241 for gross alpha and cesium-137 for gross beta activity. Sample series A contained only americium-241 radioactivity,

series B contained only cesium-137 radioactivity, and series C contained both americium-241 and cesium-137 radioactivities. Participating laboratories were supplied with standard solutions of americium-241 and cesium-137 and blank solution of dissolved water solids for preparing sample self-absorption curves.

10.2 The gross alpha data from two laboratories was rejected for the statistical analysis because their scores in the ranked results of the laboratory averages were out of the acceptable range for 18 laboratories. The gross beta data from 3 laboratories were rejected for the statistical analysis for the same reason.

10.3 The coefficients of variation for the combined within-laboratory precision for gross alpha analysis of the 3 samples ranged from 7.4% to 12.2%. The coefficients of variation for the precision of the method between laboratories ranged from 11.5% to 14.6% for gross alpha analysis for the 3 samples.

10.4 The coefficients of variation for the combined within--laoratory precision for gross beta analysis for the 3 samples ranged from 3.5% to 5.2%. The coefficients of variation for the precision between laboratories for gross beta analysis for the 3 samples ranged from 3.5% to 7.5%. The coefficients of variation for the total error between laboratories based on a single analysis ranged from 5.9% to 8.3% for gross beta analysis of the 3 samples.

10.5 In the statistical test to detect method bias the calculated values for "t" were well below the specified critical value for "t" for both gross alpha and gross beta analysis, indicating no bias in the method. Also, a comparison of the known values to the grand average values shows a deviation of less than 10% for alpha activity for the 3 samples. The same comparison for beta activity shows a deviation of less than 2% for each of the 3 samples.

10.6 Whenever the same radioisotopes are present in standards and samples, acceptable accuracy of measurement of alpha and beta activities would be expected. Whenever different radioisotopes are present in standards and samples, especially when significantly different particle energies are involved, then any measurement of gross alpha and gross beta activity in the sample will only be an estimation of the true activities. Such an estimation can only serve to indicate the need for more specific analyses.

Bibliography

1. Standard Methods for the Examination of Water and Waste Water, 14th Ed., American Public Health Association, Washington, D.C. (1976).

2. 1979 Annual Book of ASTM Standards, Part 31, American Society for Testing and Materials, Philadelphia, Pa. (1979)

3. Friedlander, G., J.W. Kennedy, and J. Miller, Nuclear and Radiochemistry, John Wiley and Sons, Inc., New York, New York, 1964.

4. Youden, W.J., and E.H. Steiner, Statistical Manual of the Association of Official Analytical Chemists, 1975.

5. Dixon, W.J., and F.J. Massey, Jr., Introduction to Statistical Analysis, 3rd Edition, McGraw-Hill, 1969.

6. Harley, J.H., N.A. Hallden, and I.M. Fisenne, "Beta Scintillation Counting With Thin Plastic Phosphors," Nucleonics, 20:59, 1961.

7. Hallden, N.A., and J.H. Harley, "An Improved Alpha-Counting Technique," Analytical Chemistry, 32:1861, 1960.

SECTION 2
GROSS RADIUM ALPHA SCREENING PROCEDURE FOR DRINKING WATER (HIGH SOLIDS SAMPLES) METHOD 900.1

1. Scope and Application

   1.1 This method covers the measurement of alpha radiation from radium isotopes. It is essentially a gross radium procedure which screens out uranium isotopes from water high in dissolved solids. Following calibration of designated instruments using suitable standards, the activity can be reported in picocuries per liter of water.

   1.2 Since radionuclides are not separated from the dissolved solids in a gross alpha measurement, and there are many water supplies with high dissolved solids, a screening method in which alpha emitting radionuclides are separated from the dissolved solids is needed. High gross alpha activity (>15 pCi/l) is often associated with high dissolved solids and uranium is frequently the alpha emitter causing high alpha activity. The drinking water standard indicates the level of gross alpha to be tolerated, less any uranium contribution and this method will meet this requirement. This method separates radium from the sample uranium and dissolved solids and it can therefore be used to screen high solids water samples for gross radium alpha activity.

   1.3 This method provides a rapid screening measurement to indicate whether a specific radium-226 analysis is required for a drinking water supply.

2. Summary of Method

   2.1 A measured volume of drinking water is heated and radium isotopes are precipitated with $BaSO_4$. After standing one hour the precipitate is filtered on a glass fiber filter and dried. The filter with precipitate is then fixed to a stainless steel planchet and the alpha activity is measured in a counting system at the alpha voltage plateau.

   2.2 Counting efficiency is determined from the radium-226 standard prepared with the same amount of $BaSO_4$ precipitate in the same geometric configuration.

3. Sample Handling and Preservation

3.1 A representative sample must be collected from a free flowing source of drinking water, and should be large enough so that meaningful aliquots can be taken. Contamination from the collection system should be eliminated by assuring that no contact occurs between the tap and the mouth of the container.

3.2 To minimize absorption losses to the sides of the container, at the time of collection add enough 1N HNO_3 to the sample to bring it to a pH < 2 (15 ml 1N HNO_3 per liter of water is sufficient). The sample should be analyzed soon after collection, and the container choice should be plastic over glass to prevent loss due to breakage, during transportation and handling,.

4. Interferences

4.1 The sample should be counted for alpha activity within one hour of preparation to minimize the effect of the ingrowing radium-226 daughters.

4.2 Uranium in the water sample is quantitatively removed by this procedure. With waters having as much as 1000 pCi/l of uranium, the effective removal of this interference is greater than 99.99%.

5. Apparatus - See Appendix D for details and specifications.

5.1 Gas-flow proportional counting system, or

5.2 Scintillator detector system

5.3 Stainless steel counting planchets

5.4 Electric hot plate

5.5 Drying lamps

5.6 Glass desiccator

5.7 Glassware

5.8 Glass fiber filters

6. Reagents

6.1 Distilled or deionized water.

6.2 Barium carrier, 16 mg/ml: Dissolve 2.846 grams $BaCl_2.2H_2O$ in water, add 0.5 ml 16N HNO_3 and dilute to 100 ml.

6.3 Hydrochloric acid, 12N: HCl (conc.) sp. gr. 1.19, 37.2%.

6.4 Nitric acid, 1N: Mix 6.2 ml 16N HNO_3 (conc.) with water and dilute to 100 ml.

6.5 Sulfuric acid, 18N: Cautiously add 500 ml 36N H_2SO_4 (conc.) to 400 ml water and, when cool, dilute to 1 liter.

7. Calibrations

7.1 Counting efficiencies for radium alpha activity in this procedure must be determined by counting prepared standard samples at several recovery weights to prepare a self-absorption curve. Standard radium-226 is added to separate samples of distilled water, acidified with 12N HCl, and the procedure (8.1 to 8.7) is followed including the addition of barium carrier. Standard solutions of radium-226 are available from NBS and EMSL-Las Vegas.

7.2 Note the time of the $BaSO_4$ precipitation as it is the reference time for ingrowth of decay products which must be accounted for in the calculations.

7.3 The counting efficiency (E) for counting radium-226 alpha activity at the alpha voltage would be:

$$E = \frac{N}{O \times P}$$

where:

N = net alpha count rate, (cpm),
O = dpm of radium-226 added,
P = alpha ingrowth factor at the mid-point of the alpha counting time.

8. Procedure

8.1 Transfer an aliquot of drinking water sample to a beaker, add 20 ml 12N HCl for each liter of sample and 1.0 ml barium carrier.

8.2 Heat the solution to boiling and slowly add with constant stirring 20 ml 18N H_2SO_4 for each liter of sample.

8.3 Continue heating and stirring for 30 minutes.

8.4 Allow the sample to settle at room temperature for one hour. Filter quantitatively through a 47 mm glass fiber filter, rinsing the final precipitate out of beaker with a fine jet of water. Place filter on a paper towel under an infra-red lamp until dry. Cool in a desiccator.

8.5 Permanently fix filter to a stainless steel planchet. (Double stick tape or rubber cement may be used to fix the filter to planchet.)

8.6 Count for alpha activity at the alpha voltage immediately.

Note: It is not always possible to count the $BaSO_4$ precipitate immediately after separation; therefore, corrections must be made for the ingrowth of the radium-226 daughters according to the table in Section 9.3.

9. Calculations

9.1 Calculate the radium alpha concentration, A, in pCi/l as follows:

$$A\ (pCi/l) = \frac{N}{2.22 \times E \times P \times V}$$

where:

N = net alpha count rate, cpm,
E = efficiency, cpm/dpm, counted at the alpha voltage,
P = alpha ingrowth factor at the mid-point of the alpha counting time,
V = liters of sample used, and
2.22 = conversion factor from dpm/pCi

If the alpha concentration, exceeds 5 pCi/l, a specific radium-226 analysis (Method 903.1) must be performed on that sample. The same $BaSO_4$ precipitate may be used for the specific radium-226 analysis.

9.2 Radium-226 alpha ingrowth factor (R):

$$R = 1 + 3\ (1-e^{-\lambda t})$$

where:

λ = value based on the decay rate of radon-222; t 1/2 = 3.824d = 91.78 hr

$$\lambda = \frac{\ln 2}{3.824} = 0.1812d^{-1}, \text{ or}$$

$$\lambda = \frac{\ln 2}{91.78} = 0.007551\ hr^{-1}$$

t = elapsed time (hrs) from the time of $BaSO_4$ separation to the mid-point of the counting period.

9.2.1 Table of Radium-226 Alpha Activity Factors

Ingrowth Time (hrs)	Radium-226 Alpha Activity Factor $1+3\ (1-e^{-\lambda t})$
0	1.000
1	1.022
2	1.045
3	1.067
4	1.089
5	1.111
6	1.133
7	1.154
8	1.176
9	1.197
10	1.218
16	1.341
24	1.498
48	1.912
72	2.258

10. Precision and Accuracy

The following table of analyses of mine water samples indicates the comparability of Method 900.1 with Method 903.1 and reveals how the high gross alpha values for waters of high solids were in reality uranium values since the radium-226 levels were all below 2 pCi/l.

Type Sample	pCi/l			
	Radium-226 by Emanation Method 903.1	Gross Radium Alpha Method 900.1	Uranium by Fluorometry*	Gross Alpha Method 900.0
Mine Water	0.85 ± .04	0.83 ± .15	811	440
" "	0.30 ± .02	0.86 ± .20	545	170
" "	0.82 ± .03	1.97 ± .67	1131	890
" "	0.30 ± .02	0.69 ± .06	811	370
" "	0.43 ± .03	0.82 ± .06	592	550
" "	1.15 ± .10	3.01 ± .53	958	1020
" "	1.01 ± .05	0.94 ± .29	1031	1300
" "	1.12 ± .05	0.95 ± .08	865	1110
" "	0.89 ± .05	1.10 ± .32	741	410

*pCi/l = 0.68 µg/l of U-238

SECTION 3
RADIOACTIVE CESIUM IN DRINKING WATER
METHOD 901.0

1. Scope and Application

   1.1 This method covers the measurement of cesium-134 and cesium-137 in the same sample of drinking water. This technique makes it possible to ascertain whether a hazardous concentration of a specific nuclide is present when a gross beta screening analysis exceeds 15 pCi/l.

   1.2 The limits set forth in PL 93-523, 40 FR 34324 recommend that in the case of man-made radionuclides, the limiting concentration is that which does not produce an annual dose equivalent greater than 4 mrem/year. This is calculated on the basis of a 2 liter per day drinking water intake using the 168 hour data listed in NBS Handbook 69. If several radionuclides are present, the sum of their annual dose equivalent must not exceed 4 mrem/year.

2. Summary of Method

   2.1 Stable cesium carrier is added to a specified volume of drinking water. The cesium is collected as the phosphomolybdate in an acid medium. The precipitate is dissolved with base, and the ammonium and molybdate ions are removed by heating and calcium precipitation respectively. The cesium is purified as the chloroplatinate for counting.

   2.2 The final precipitate is counted by gamma-ray spectrometry to determine cesium-134 (605 and 796 keV) and cesium-137 (662 keV) from the photopeaks in the resulting spectrum.

   2.3 If the more restrictive cesium-134 is present alone, the planchet may be beta-counted in a beta counter whose efficiency for measuring this nuclide has been previously determined using a suitable standard.

3. Sample Handling and Preservation - (See Sec. 3, Method 900.0).

4. Interferences

   4.1 If ammonium ions are not completely removed, the calcium molybdate scavenge will not be complete and the final precipitate will have an incorrect chemical yield determination. The presence of rubidium will also increase the weight of the chloroplatinate precipitate.

4.2 Counting efficiencies should be determined for the geometry and solids accumulation of the final precipitate.

5. Apparatus - See APPENDIX D for details and specifications.

5.1 Gamma ray spectrometer.

5.2 Gas-flow proportional counting system. (Low background beta, < 3 cpm.)

5.3 Plastic ring and disc mounts.

5.4 Mylar film.

5.5 Teflon filter holder.

5.6 Electric hot plate.

5.7 Analytical balance.

5.8 pH meter.

5.9 Drying oven.

5.10 Aluminum desiccator.

5.11 Centrifuge.

5.12 Glassware.

6. Reagents

6.1 Distilled or deionized water.

6.2 Ammonium phosphomolybdate (prepared reagent): Dissolve 100 grams of molybdic acid (85% MoO_3) in a mixture of 240 ml of water and 140 ml 15N NH_4OH. When the solution is complete, filter and add 60 ml 16N HNO_3. Mix 400 ml 16N HNO_3 and 960 ml water. Allow both solutions to cool to room temperature. With constant stirring, add the ammonium molybdate solution to the nitric acid solution. Allow to stand for 24 hours. Filter through Whatman #42 filter paper. Discard the insoluble material.

Collect the filtrate in a 3-liter beaker and heat to 50° to 55°C. Remove from heating unit. It is important that the solution not be heated above 55°C to avoid contamination of the precipitate with molybdic anhydride. Add 25 grams NaH_2PO_4 dissolved in 100 ml water to the ammonium molybdate solution. Stir occasionally for 15 minutes and allow the precipitate to settle (approximately 30 minutes). Filter through Whatman #42 filter paper. Wash the precipitate with 1% potassium nitrate and finally with water. Dry the precipitate and paper at 100°C for 3 to 4 hours. Transfer the

$(NH_4)_3P(Mo_3O_{10})_4$ solid to a weighing bottle, and store in a desiccator.

6.3 Calcium chloride, 3M: Dissolve 33g $CaCl_2$ in water and dilute to 100 ml.

6.4 Cesium carrier, 10 mg/ml, standardized: Dissolve 1.267g CsCl in water and dilute to 100 ml in volumetric flask.

Standardization: (in triplicate)

Pipette 1.0 ml cesium carrier into a 50 ml centrifuge tube. Add 15 ml water, 2 ml 0.1M chloroplatinic acid and 10 ml ethanol. Stir and cool in an ice bath for 5-10 minutes. Filter through a tared glass-fiber filter. Wash the precipitate with 10 ml water, 10 ml 1N HCl and 10 ml ethanol. Dry to constant weight at 105°C, cool and weigh as Cs_2PtCl_6.

6.5 Chloroplatinic acid, 0.1M: Dissolve 5.2g $H_2PtCl_6.6H_2O$ in water and dilute to 100 ml.

6.6 Ethanol, 95%: C_2H_5OH.

6.7 Hydrochloric acid, 12N: HCl (conc.), sp.gr. 1.19, 37.2%.

6.8 Hydrochloric acid, 6N: Mix 1 volume 12N HCl (conc.) with 1 volume water.

6.9 Hydrochloric acid, 1N: Mix 1 volume 12N HCl (conc.) with 11 volumes water.

6.10 Sodium hydroxide, 6N: Dissolve 24g NaOH in water and dilute to 100 ml.

7. Calibrations

7.1 The detection efficiency of the gamma ray spectrometer for measuring cesium-134 and cesium-137 must be obtained with commercially available calibrated standards. Geometric configurations comparable to the final separated sample should be prepared and counted so that the cpm per dpm (detection efficiency) can be determined.

7.2 If a beta counter is used in the measurement, a similar calibration is required with a standard tracer solution over a range of sample thicknesses (mg/cm^2).

8. Procedure

8.1 To a 1000-ml drinking water sample, add 1.0 ml cesium carrier and 10 ml 12N HCl to make the solution ~0.1N in HCl.

8.2 Slowly add 1 gram $(NH_4)_3P(Mo_3O_{10})_4$ and stir for 30 minutes,

using a magnetic stirrer. Allow precipitate to settle for at least 4 hours, and discard supernate.

8.3 Slurry precipitate into a centrifuge tube. Centrifuge and discard supernate.

8.4 Wash precipitate with 20 ml 1N HCl, and discard wash solution.

8.5 Dissolve precipitate by dropwise addition of 3 to 5 ml 6N NaOH. Heat over a flame for several minutes to remove ammonium ions. (Moist pH paper turns green as long as NH_3 vapors are evolved.) Dilute to 20 ml with water.

8.6 Add 10 ml 3M $CaCl_2$ and adjust to pH 7 with 6N HCl to precipitate $CaMoO_4$. Stir, centrifuge, and filter supernate through Whatman #41 filter paper (or equivalent) into a 50-ml centrifuge tube.

8.7 Wash the precipitate remaining in the centrifuge tube with 10 ml water. Filter through the same filter paper, and combine the wash with filtrate. Discard filter paper.

8.8 Add 2 ml 0.1M H_2PtCl_6 and 5 ml ethanol. Cool and stir in ice bath for 10 minutes.

8.9 Transfer with water to a tared glass-fiber filter. Wash with successive portions of water, 1N HCl, and ethanol.

8.10 Dry to constant weight at 105°C, cool, weigh, mount, and count, either gamma for cesium-134 and cesium-137 or beta for cesium-134 alone.

9. Calculations

9.1 Calculate the cesium concentration*, D, in picocuries per liter as follows:

$$D = \frac{C}{2.22 \times EVR}$$

where:

C = net beta count rate, cpm, or net gamma count rate, cpm,
E = beta counter efficiency, or gamma-ray spectrometer efficiency,
V = liters of sample used,
R = fractional chemical yield, and
2.22 = conversion factor from dpm/pCi.

*Since drinking water regulations require cesium-134 analyses on quarterly composites only when the gross beta activity exceeds 15 pCi/l, the maximum decay would be < 10%, assuming all activity was due to cesium-134 and all activity was collected within the first aliquot. Therefore, no decay correction is needed.

10. Precision and Accuracy

A single laboratory replicate test by three analysts determined the precision and accuracy of this method. With a cesium-137 spiked water sample the results of the nine replicate analyses expressed in pCi/l were:

18,530	18,010	17,030
18,770	17,430	18,830
17,940	17,230	17,430

A one-way Analysis of Variance[2] was performed to determine analyst variation:

Source	Degrees of Freedom	Sum Squares of Error	Mean Square of Error
Between Analyst	2	11,990	5995
Within Analyst	6	24,799	4133

$$\text{Calculated } F\ (2,6) = \frac{5995}{4133} = 1.45$$

$$\text{Theoretical } F\ (2,6)\ 95\%\ \text{Confidence Limit} = 5.14$$

It can be concluded that there is no analyst variation. Therefore, precision will be estimated by combining all data.

$$\text{Precision } (1\sigma) = \sqrt{\frac{x^2 - \frac{(x)^2}{N}}{N-1}}$$

$$= \sqrt{\frac{2.89\text{x}10^9 - 2.88 \text{ x } 10^9}{8}}$$

$$= 678$$

Mean $\overline{X}$ = 17910 pCi/l

% Precision relative to mean = (678/17910) 100

= 3.7%

Since counting errors have been minimized, the overall precision when applied to low activity samples is calculated to be:

$$\text{Overall Precision } (1\sigma) = \sqrt{(3.7)^2 + (\%\ \text{counting error})^2}$$

$$\%\ \text{Bias is calculated } \frac{(17910 - 15540)}{15540} \text{ x } 100 = 15.2$$

Bibliography

1. Finston, H.L., and M.T. Kinsley. The Radiochemistry of Cesium. AEC Rept. NAS-NS-3035 (1961).

2. Hicks, C.R., Fundamental Concepts in the Design of Experiments, New York; Holt, Rinehart and Winston, 1964.

3. Maximum Permissible Body Burdens and Maximum Permissible Concentrations of Radionuclides in Air and in Water for Occupational Exposure. Handbook 69, National Bureau of Standards, U.S. Dept. of Commerce, 1963.

4. A Handbook of Radioactivity Measurements Procedures. NCRP Report No. 58 National Council on Radiation Protection and Measurements, Washington, D.C. (November 1978).

SECTION 4
GAMMA EMITTING RADIONUCLIDES IN DRINKING WATER
METHOD 901.1

1. Scope and Application

   1.1 This method describes the use of gamma spectroscopy for the measurement of gamma photons emitted from radionuclides without separating them from the sample matrix. This technique makes it possible to ascertain whether a hazardous concentration of a specific gamma emitter is present in a drinking water sample.

   1.2 The limits set forth in PL 93-523, 40 FR 34324 recommend that in the case of man-made radionuclides, the limiting concentration is that which will produce an annual dose equivalent to 4 mrem/year. This is calculated on the basis of a 2 liter per day drinking water intake using the 168 hour data listed in NBS Handbook 69. If several radionuclides are present, the sum of their annual dose equivalent must not exceed 4 mrem/year.

   1.3 Two types of gamma detectors are currently widely used, namely, the thallium activated sodium iodide crystal, NaI(Tl), and the lithium drifted germanium detector, Ge(Li). The Ge(Li) detector does not detect gamma photons as efficiently as the NaI(Tl) detector, but its photon energy resolution is far better than that of the NaI(Tl) detector. Because of its energy resolution advantage and the availability of large active volume Ge(Li) detectors, a Ge(Li) detection system is recommended for measuring gamma emitting radionuclides in drinking water samples.

   1.4 The method is applicable for analyzing water samples that contain radionuclides emitting gamma photons with energies ranging from about 60 to 2000 keV. The required sensitivity of measurement for the more hazardous gamma emitters is listed in the National Interim Drinking Water Regulations, Section 141.25. For a method to be in compliance, the detection limits for photon emitters must be 1/10 of the applicable limit. The detection limits for cesium-134 and cesium-137, which are 10 and 20 pCi/l respectively, are met by this procedure.

2. Summary of Method

   2.1 A homogeneous aliquot of drinking water is put into a standard geometry for gamma counting. The counting efficiency for this

geometry must have been determined with standard (known) radionuclide activity. Sample aliquots are counted long enough to meet the required sensitivity of measurement, specified by the NIPDWR (see Appendix C).

2.2 The gamma spectrum is printed out and/or stored in the appropriate computer-compatible device for data processing (calculation of sample radionuclide concentrations).

3. Sample Handling and Preservation - See Section 3, Method 900.0

4. Interferences

4.1 Significant interference occurs when counting a sample with a NaI(Tl) detector and the sample radionuclides emit gamma photons of nearly identical energies. Such interference is greatly reduced by counting the sample with a Ge(Li) detector.

4.2 Sample homogeneity is important to gamma count reproducibility and counting efficiency validity. When sample radionuclides are adsorbed on the walls of the counting container, the sample is no longer homogeneous. This problem can be lessened by adding 15 ml 1N HNO_3 per liter of sample at collection time.

5. Apparatus - See Appendix D for Details and Specifications

5.1 Large volume (> 50 cm^3) Ge(Li) detector or 4" x 4" NaI(Tl) detector.

5.2 Gamma-ray spectrometer plus analyzer with at least 2048 channels for Ge(Li) or 512 for NaI(Tl).

5.3 Standard geometry sample counting containers for either detector. (1-pint cylindrical container or 4-liter Marinelli polyethylene beaker.)

5.4 Access to a computer.

6. Reagents

6.1 Radon free distilled or deionized water for standard preparation and sample dilution.

6.2 Nitric acid, 1N: Mix 6.2 ml of 16N HNO_3 (conc.) with distilled water and dilute to 100 ml.

7. Calibration

7.1 A Ge(Li) detector-gamma spectrometer can be calibrated for energy resolution as follows:

NBS or NBS-traceable standard solutions are prescribed for this calibration. Adjust the analyzer amplifier "gain" and analog-to-digital converter "zero offset" to locate each photopeak in its appropriate channel. For a Ge(Li) detector system a 0.5 or 1.0 keV per channel calibration is recommended. For a NaI(Tl) detector system a 10 or 20 keV per channel calibration is satisfactory since the energy resolution of this type detector is lower than that of the Ge(Li) detector.

7.2 For NaI(Tl), a library of radionuclide gamma energy spectra is prepared with known radionuclide-water sample concentrations at standard sample geometries; for Ge(Li), a single solution containing a mixture of fission products may be used. These standard solutions are available from NBS or the Quality Assurance Division, EMSL-Las Vegas. Counting efficiencies for the various gamma energies (photopeaks) are determined from the activity counts of those known value samples. A counting efficiency vs. gamma energy curve is determined for each container geometry and for each detector that is to be used for sample analysis. Known amounts of various radionuclides that emit gamma photons with energies well spaced and distributed over the normal range of analysis may also be used for this calibration. These are put into each container geometry and gamma counted for a photopeak spectrum accumulation.

7.3 The detector efficiency, E, at a given photopeak energy for a given geometry is determined by using a known quantity or concentration (for a volume geometry) of a gamma emitting radionuclide, as follows:

$$E = \frac{C}{A \times B}$$

where:

C = net count rate, cpm, (integrated counts in the photopeak above the base line continuum divided by the counting time in minutes),
A = activity of radionuclide added to the given geometry container (dpm),
B = the gamma-ray abundance of the radionuclide being measured (gammas/disintegration).

8. Procedure

8.1 Measure an aliquot of the drinking water sample in a standard geometry (one that has been calibrated).

8.2 Place the standard geometry container (with the sample aliquot) on a shielded Ge(Li) or NaI(Tl) detector and gamma count for a period of time that will meet the required sensitivity of measurement, specified by the NIPDWR. (The required counting time can be determined by equations given in Appendix C).

8.3 Print the gamma spectrum and/or store the spectrum on the appropriate computer-compatible device.

8.4 Calculate the radioactivity of the gamma emitters present in the sample.

9. Calculations

These calculations are for determinations using a Ge(Li) detector system. With a NaI(Tl) detector system, similar calculations can be done by a computer using a library of radionuclide spectra and a least-squares (1,2) or matrix analysis program (3).

9.1 The isotopes indicated by the gamma spectrum are determined as follows:

9.1.1 Identify all photopeak energies.

9.1.2 Integrate the photopeak regions of the spectrum and subtract the area under the base line continuum to determine the true photopeak area.

9.1.3 Isotopes are identified by their appropriate photopeaks, and ratios to each other when more than one gamma photon is emitted by an isotope in the sample.

9.2 Calculate the sample radionuclide concentrations, A, in pCi/l as follows:

$$A = \frac{C}{2.22 \times BEV}$$

where:

C = net count rate, cpm, in the peak area above base line continuum,
B = the gamma-ray abundance of the radionuclide being measured (gammas/disintegration),
E = detector efficiency (counts/gamma) for the particular photopeak energy being considered.
V = volume of sample aliquot analyzed (liters).
2.22 = conversion factor from dpm/pCi.

10. Precision and Accuracy

10.1 Precision and accuracy of this test procedure will be determined by a separate collaborative study. However, a summary of the EMSL-Las Vegas cross-check and performance sample studies (six and two respectively) for the period of August, 1978, to October, 1979 gives the following information about acceptable performance in the analyses of water samples for gamma emitting radionuclides by gamma spectroscopy. Some laboratories used Ge(Li) detector/gamma

spectrometer systems and others used NaI(Tl) detector/gamma spectrometer systems.

10.2 Six gamma emitting radionuclides were used in those studies, namely, chromium-51, cobalt-60, zinc-65, ruthenium-106, cesium-134, and cesium-137. Samples for the August 1978 and October 1978 cross-check samples and the April 1979 performance samples contained cobalt-60 and cesium-134. The February 1979 cross-check samples contained cobalt-60, zinc-65, cesium-134, and cesium-137. The October 1979 cross-check samples contained chromium-51, cobalt-60, cesium-134, cesium-137. The October 1978 performance samples contained cesium-134 and cesium-137.

10.3 Cesium-134 in seven studies was analyzed by an average of 46 laboratories for a 90.8 ± 11.6% average acceptable performance. Cesium-137 in five studies was analyzed by an average of 48 laboratories for a 87.7 ± 11.7% average acceptable performance. Since the radionuclide concentrations in the samples for all studies were well below the maximum allowable concentrations for drinking water, this non-destructive gamma-emitting procedure to ascertain whether cesium-134 or cesium-137 is present is recommended as an alternate to Method 901.0.

BIBLIOGRAPHY

1. Salmon, L., Computer Analysis of Gamma-Ray Spectra From Mixtures of Known Nuclides by the Method of Least Squares, NAS-NS 3107, Appl. of Comp. to Nucl. and Radiochemistry, 165-183, National Acad. Sciences (1962).

2. Schonfeld, E., Alpha M., An Improved Computer Program for Determining Radioisotopes by Least-Squares Resolution of Gamma-Ray Spectra, ORNL-3975 (1966).

3. Hagee, G.R., et al., Determination of ^{131}I, ^{137}Cs, and ^{140}Ba in Fluid Milk by Gamma Spectroscopy, Talanta, 5, 36-43, (1960).

SECTION 5
RADIOACTIVE IODINE IN DRINKING WATER
METHOD 902.0

1. Scope and Application

1.1 According to the National Interim Primary Drinking Water Regulations (NIPDWR), drinking water supplies designated as possibly contaminated by effluents from nuclear facilities are to be monitored quarterly for iodine-131. Also, for drinking water supplies not designated as above, when the gross beta activity exceeds 50 pCi/l, the drinking water must be analyzed for specific radionuclides for the assignment of dose for people using those supplies. This method covers the measurement of radioactive iodine in a sample of drinking water.

1.2 The NIPDWR lists a required sensitivity of measurement of 1 pCi/l for iodine-131 in drinking water. This method provides for the separation and concentration of iodine from sufficiently large samples so the 1 pCi/l required sensitivity can be met. See Appendix C for calculations of necessary counting time to meet the required sensitivity of measurement.

2. Summary of Method

2.1 Stable iodate carrier is added to an acidified sample of drinking water. The iodate is reduced to the iodide state with Na_2SO_3 and all iodine activity is precipitated as AgI. The precipitate is dissolved and purified with zinc powder and sulfuric acid and reprecipitated as PdI_2 for counting.

2.2 The final precipitate is counted either with a beta system or beta/gamma coincidence scintillation system. Gamma-ray spectrometry, however, will not meet the sensitivity of measurement required by NIPDWR.

3. Sample Handling and Preservation

3.1 (See Section 3.1, Method 900.0).

3.2 The drinking water sample should not have acid added at time of collection, and radiochemical analysis for iodine-131 should be performed soon after receipt to minimize radioactive decay losses ($t_{1/2}$ = 8.04 d).

4. Interferences

4.1 The presence of stable iodide in the drinking water would interfere by indicating a higher chemical yield than actually resulted.

4.2 Counting efficiencies should be determined for the range of precipitate weights anticipated.

5. Apparatus - See APPENDIX D for details and specifications.

5.1 Gamma spectrometer system, or

5.2 Gas-flow proportional counting system. (Low-background beta, < 3 cpm.), or

5.3 Beta/Gamma coincidence scintillation system.

5.4 Plastic ring and disc mounts

5.5 Mylar film.

5.6 Teflon filter holder.

5.7 Electric hotplate

5.8 Analytical balance

5.9 pH meter

5.10 Drying oven

5.11 Aluminum desiccator

5.12 Centrifuge

5.13 Glassware

6. Reagents

6.1 Distilled or deionized water.

6.2 Ammonium hydroxide, 6N: Mix 2 volumes 15N NH_4OH (conc.) with 3 volumes water.

6.3 Ethanol, 95%: C_2H_5OH.

6.4 Hydrochloric acid, 6N: Mix 1 volume 12N HCl (conc.) with 1 volume water.

6.5 Iodate carrier, (IO_3^-), 10 mg/ml (as I^-), standardized: Dissolve 1.685g KIO_3 in water and dilute to 100 ml. Store in a dark flask.

Standardization: (in triplicate)

Pipette 1.0 ml potassium iodate (KIO_3) carrier into a 50 ml centrifuge tube containing 10 ml 0.4N HNO_3. Add 1 ml 1M Na_2SO_3 and stir in a water bath for five minutes. Add 1 ml 0.2M $PdCl_2$ to precipitate and coagulate PdI_2. Cool and filter through a tared fritted glass funnel (fine to medium). Dry at 105°C, cool, and weigh as PdI_2.

6.6 Nitric acid, 16N: HNO_3 (conc.) sp. gr. 1.42, 70.4%.

6.7 Nitric acid, 0.4N: Mix 1 volume 16N HNO_3 (conc.) with 39 volumes of water.

6.8 Palladium chloride, $PdCl_2$, 5% solution in 0.6N HCl: reagent grade.

6.9 Palladium chloride, 0.2M: a) Dissolve 3.542 g $PdCl_2$ in 100 ml 1N HCl or b) Mix 118 ml 5% $PdCl_2$* with 50 ml 2N HCl.

6.10 Silver nitrate, 0.1M: Dissolve 1.7g $AgNO_3$ in water and dilute to 100 ml. Store in a dark flask.

6.11 Sodium sulfite, 1M: Dissolve 5g Na_2SO_3 in 40 ml water. Prepare fresh reagent every week.

6.12 Sulfuric acid, 2N: Mix 1 volume 36N H_2SO_4 (conc.) with 17 volumes of water.

6.13 Zinc powder: reagent grade.

7. Calibrations

7.1 The detection efficiency of the gamma ray spectrometer must be obtained for measuring the iodine-131 photopeak (364 keV). With commercially available calibrated standards, geometric configurations are to be prepared comparable to the final separated sample so that cpm per dpm factors can be determined.

7.2 Similar calibrations are to be made for the beta and the beta/gamma coincidence counters.

8. Procedure

8.1 To a 1000-ml drinking water sample, add 7.5 ml 16N HNO_3 and 1.0 ml iodate (IO_3^-) carrier. Mix well.

---

*Palladium chloride, 5% in hydrochloric acid is available as a reagent solution from several chemical houses and the 4 oz. size (118 ml) can be diluted directly to 0.2M by adding 50 ml 2N HCl to the stock reagent.

8.2 Add 4 ml 1M Na_2SO_3 and stir for 30 minutes.

8.3 Add 20 ml 0.1M $AgNO_3$, stir for 1 hour and allow to settle for another hour.

8.4 Decant and discard as much as possible of the supernate. Filter the remainder through a glass-fiber filter and discard filtrate.

8.5 Transfer the filter to a centrifuge tube and slurry with 10 ml water. Add 1 gram zinc powder and 2 ml 2N H_2SO_4, and stir frequently for at least 30 minutes.

8.6 Filter, with vacuum, through a fine-fritted glass funnel and collect filtrate in an Erlenmeyer flask. Use a few ml water to wash both residue and filter and add the wash to filtrate in the flask. Discard residue.

8.7 Add 2 ml 6N HCl to the filtrate and heat. Add 1 ml 0.2M $PdCl_2$ and digest for at least 5 minutes. Centrifuge and discard supernate.

8.8 Dissolve the precipitate in 5 ml 6N NH_4OH and heat in a boiling water bath. Filter through a glass-fiber filter and collect filtrate in a centrifuge tube. Discard filter and residue.

8.9 Neutralize the filtrate with 6N HCl, add 2 ml additional, and heat in a water bath. Add 1 ml 0.2M $PdCl_2$ to reprecipitate PdI_2 and digest for 10 minutes. Cool slightly.

8.10 Transfer to a tared glass-fiber filter with water. Wash successively with 5 ml portions of water and ethanol.

8.11 Dry to constant weight at 105°C, cool, mount, and count either beta or beta/gamma coincidence.

Note: Ordinarily, the final PdI_2 precipitate is collected on a glass-fiber filter and counted in a low background beta system where the background is < 3 cpm, and the counting efficiency is 35%. However, if the precipitate is collected on an 0.8 μ membrane filter, and dried for 30 minutes at 70°C, it is possible to count the PdI_2 in a beta/gamma coincidence scintillation system where the background coincidence count is less than 0.1 cpm. and the counting efficiency is approximately 40%.

9. Calculations

9.1 Calculate the iodine concentration, D, in picocuries per liter as follows:

$$D = \frac{C}{2.22 \times EVR \times A}$$

where:

C = net count rate, cpm, (gross count rate minus reagent background count rate),
E = counter efficiency,
V = liters of sample used,
R = fractional chemical yield,
A = decay correction for iodine-131 ($t_{1/2}$ = 8.04 d), and
2.22 = conversion factor from dpm/pCi.

10. Precision and Accuracy

10.1 Following replicate analyses performed by three operators on aliquots containing 5000 dpm/l, the accuracy and precision of this procedure were determined.

The accuracy of triplicate analyses on 1000 ml aliquots was ± 4% of the expected value. The precision attained by the technicians based on three sets of triplicate analyses was ± 2%.

Bibliography

1. Matuszek, J.M., "The Influence of Nonstatistical Variations on Low-Level Measurements of ^{131}I in Milk," Trans. Am. Nucl. Soc., 18, 49 (1974).

2. Brauer, F.P., J.H. Kaye, and R.E. Connaly. X-ray and β- Coincidence Spectrometry Applied to Radiochemical Analysis of Environmental Samples. Advances in Chemistry Series, No. 93, Radionuclides in the Environment, pp. 231-253. American Chemical Society (1970).

3. Kleinberg, J., and G.A. Cowan. The Radiochemistry of Fluorine, Chlorine, Bromine, and Iodine. AEC Rept. NAS-NS-3005 (1960).

SECTION 6
ALPHA-EMITTING RADIUM ISOTOPES IN DRINKING WATER
METHOD 903.0

1. Scope and Application

   1.1 This method covers the measurement of the total soluble alpha emitting radioisotopes of radium, namely radium-223, radium-224 and radium-226 in drinking water. Part 141 of the Interim Primary Drinking Water Regulations, Federal Register, July 9, 1976, has promulgated the maximum contaminant levels of radium-226 plus radium-228 (see Method 904.0) not to exceed 5 pCi/l.

   1.2 Although the method does not always give an accurate measurement of the radium-226 content of the sample (when other radium alpha emitters are present), it can be used to screen samples. When the total radium alpha activity of a drinking water sample is greater than 5 pCi/l, then the radium-226 analysis (Method 903.1) is required.

   1.3 Since this method provides for the separation of radium from other water dissolved solids in the sample, the sensitivity of the method is a function of sample size, reagent and instrument background, counting efficiency and counting time. The National Interim Primary Drinking Water Regulations (NIPDWR) require a sensitivity of measurement of 1 pCi/l for radium-226. Using a low background alpha counting system, liter or more size sample aliquots, and sufficient counting times, the detection limit of 1 pCi/l can easily be met.

   1.4 Absolute measurement can be made by calibrating the alpha detector with standard radium-226 in the geometry obtained with the final precipitate.

2. Summary of Method

   2.1 The radium in the drinking water sample is collected by coprecipitation with barium and lead sulfate, and purified by reprecipitation from EDTA solution. Citric acid is added to the drinking water sample to assure that complete interchange occurs before the first precipitation step. The final $BaSO_4$ precipitate which includes radium-226, radium-224 and radium-223 is alpha counted to determine the total disintegration rate of the radium isotopes.

2.2 The radium activities are counted in an alpha counter where efficiency for determining radium-226 has been calibrated with a standard of known radium-226 activity. By making a correction for the ingrowth of alpha activity in radium-226 for the elapsed time after separation, one can determine radium activity in the sample. Since some daughter ingrowth can occur before the separated radium is counted, it is necessary to make activity corrections for the count rate. A table of ingrowth factors for various times after radium separation is provided. (See Sec. 9.2).

3. Sample Handling and Preservation - (See Section 3 - Method 900.0)

4. Interferences

4.1 Inasmuch as the radiochemical yield of the radium activity is based on the chemical yield of the $BaSO_4$ precipitate, the presence of significant natural barium in the sample will result in a falsely high chemical yield.

4.2 Radium isotopes are separated from other alpha emitting radionuclides by this method.

4.3 The alpha count of the separated radium must be corrected for its partially ingrown alpha emitting daughters.

5. Apparatus - See Appendix D for details and specifications.

5.1 Alpha scintillation or a gas-flow proportional alpha particle counting system with low background (< 1 cpm)

5.2 Stainless steel counting planchets

5.3 Electric hot plate

5.4 Drying oven and/or drying lamp

5.5 Glass desiccator

5.6 Analytical balance

5.7 Centrifuge

5.8 Glassware

6. Reagents

6.1 Distilled or deionized water.

6.2 Acetic acid, 17.4N: glacial CH_3COOH (conc.), sp.gr. 1.05, 99.8%.

6.3 Ammonium Sulfate, 200 mg/ml: Dissolve 20 grams $(NH_4)_2SO_4$ in a minimum of water and dilute to 100 ml.

6.4 Barium carrier, 16 mg/ml, standardized:
Dissolve 2.846g $BaCl_2.2H_2O$ in water, add 0.5 ml 16N HNO_3, and dilute to 100 ml with water.

Standardization: (in triplicate)

Pipette 2.0 ml carrier solution into a centrifuge tube containing 15 ml water. Add 1 ml 18N H_2SO_4 with stirring and digest precipitate in a water bath for 10 minutes. Cool, centrifuge and decant the supernatant. Wash precipitate with 15 ml water. Transfer the precipitate to a tared stainless steel planchet with a minimum of water. Dry under infra-red lamp, store in desiccator and weigh as $BaSO_4$.

6.5 Citric acid, 1M: Dissolve 19.2g $C_6H_8O_7.H_2O$ in water and dilute to 100 ml.

6.6 EDTA reagent, basic, (0.25M): Dissolve 20g NaOH in 750 ml water, heat and slowly add 93g disodium ethylenedinitriloacetate dihydrate $(Na_2C_{10}H_{14}O_8N_2.2H_2O)$. Heat and stir until dissolved, filter through course filter paper and dilute to 1 liter.

6.7 Lead carrier, 15 mg/ml: Dissolve 2.4g $Pb(NO_3)_2$ in water, add 0.5 ml 16N HNO_3 and dilute to 100 ml with water.

6.8 Sodium hydroxide, 6N: Dissolve 24g NaOH in 80 ml water and dilute to 100 ml.

6.9 Sulfuric acid, 18N: Cautiously mix 1 volume 36N H_2SO_4 (conc.) with 1 volume of water.

6.10 Sulfuric acid, 0.1N: Mix 1 volume 18N H_2SO_4 with 179 volumes of water.

7. Calibrations

7.1 The counting efficiency for radium alpha particles with barium sulfate carrier present must be determined using a standard (known) radium alpha activity and 32 mg of barium carrier as $BaSO_4$ (same carrier amount used with samples). This is done with spiked distilled water samples and the procedure for regular samples is followed. Note the time of the Ra-$BaSO_4$ precipitation.

7.2 The radium-alpha counting efficiency, E, is calculated as follows:

$$E \text{ (cpm/dpm)} = \frac{C}{A \times I}$$

where:

C = sample net cpm (gross counts minus background divided by the counting time in minutes).
A = dpm of radium-226 added to sample.
I = ingrowth factor for the elapsed time from Ra-$BaSO_4$ precipitation to mid-point of counting time.

8. Procedure

8.1 To a 1000-ml drinking water sample, add 5 ml 1M $C_6H_8O_7 \cdot H_2O$, 1 ml lead carrier, and 2.0 ml barium carrier, and heat to boiling.

8.2 Cautiously, with vigorous stirring, add 20 ml 18N H_2SO_4. Digest 5 to 10 minutes and let the mixed $BaSO_4$-$PbSO_4$ precipitate settle overnight. Decant and discard supernate.

8.3 Transfer the precipitate to a centrifuge tube with a minimum amount of 0.1N H_2SO_4. Centrifuge and discard supernate.

8.4 Wash the precipitate twice with 0.1N H_2SO_4. Centrifuge and discard washes.

8.5 Dissolve the precipitate by adding 15 ml basic EDTA reagent; heat in a hot water bath and add a few drops 6N NaOH until solution is complete.

8.6 Add 1 ml $(NH_4)_2SO_4$ (200 mg/ml) and stir thoroughly. Add 17.4N CH_3COOH dropwise until precipitation begins, then add 2 ml extra. Digest 5 to 10 minutes.

8.7 Centrifuge, discard the supernate, and record time.

Note: At this point, the separation of the $BaSO_4$ is complete and the radon (and daughters) ingrowth commences.

8.8 Wash the $BaSO_4$ precipitate with 15 ml water, centrifuge, and discard wash.

8.9 Transfer the precipitate to a tared stainless-steel planchet with a minimum of water, and dry under infra-red lamps.

Note: Drying should be rapid but not too vigorous to minimize any loss of radon-222 that has already grown into the precipitate.

8.10 Cool, weigh, and store in desiccator.

8.11 Count in a gas-flow internal proportional counter or an alpha scintillation counter to determine the alpha activity.

9. Calculation

9.1 Calculate the radium-226 concentration, D, (which would include any radium-224 and radium-223 that is present) in picocuries per liter as follows:

$$D = \frac{C}{2.22 \times EVR \times I}$$

where:

C = net count rate, cpm,
E = counter efficiency for radium-226 in $BaSO_4$ predetermined for this procedure (see Sec. 7.2).
V = liters of sample used,
R = fractional chemical yield,
I = ingrowth correction factor (See Sec. 9.2), and
2.22 = conversion factor from dpm/pCi.

9.2 It is not always possible to count the $BaSO_4$ precipitate immediately after separation, therefore, corrections must be made for the ingrowth of the radium-226 daughters between the time of separation and counting according to the following table:

Hours from separation to counting	Ingrowth correction factor
0	1.00
1	1.02
2	1.04
3	1.06
4	1.08
5	1.10
6	1.12
24	1.49
48	1.91
72	2.25
96	2.54
120	2.78
144	2.99
192	3.29
240	3.51

10. Precision and Accuracy

10.1 Precision and accuracy data for this method is taken from a survey of analyses of radium in water samples in the EMSL-Las Vegas

intercomparison program for the period September 1977 to January 1979. Some of the laboratories participating in the EMSL-Las Vegas intercomparison program used this method because it was included in the approved methods and they did not have the capability for analyzing radium-226 by radon-222 emanation, (Method 903.1), which was also an approved method.

10.2 Eleven laboratories participated in from 1 to 7 of 8 intercomparison studies and analyzed 46 test samples for radium-226 by this method. Of the 46 tests, the data for 40 tests (in triplicate, for a total of 120 aliquots) was used for the laboratory performance statistical analysis. Of the 40 tests used, 29 tests (87 aliquots analyzed) gave acceptable results (results within 3 sigma of the known value, with 1 sigma equal to 15% of the known value). The extent of acceptability in the 40 tests (29 acceptable) was 72.5%.

10.3 The 8 intercomparison studies were conducted quarterly from September 1977 to January 1979. Two of the studies were performance studies in which the samples contained other radionuclides. Also, samples in all of the studies contained a known quantity of radium-228 activity (with the thorium-228 and radium-224 daughters partially ingrown).

10.4 Radium-226, radium-228, and radium-224 activities in study samples:

	pCi/l (at separation)		
Study	Radium-226	Radium-228	Radium-224
1	3.5	9.3	0.4
2	10.2	14.6	1.1
3	5.5	16.7	1.7
4 (performance)	6.5	7.9	0.8
5	3.7	5.6	0.7
6	6.8	20.8	3.0
7	9.2	8.9	1.5
8 (performance)	5.0	5.4	0.8

10.5 It can be seen from the above table that the radium-224 was a significant contributor to the alpha activity of precipitated radium activity and therefore the samples were biased high for a radium-226 analysis by this method. A waiting period of 14 days after radium separation and purification before counting for alpha activity would reduce the radium-224 contribution to less than 0.1 of its activity at purification (radium-224 separation from its

thorium-228 parent). The count would then need to be corrected for the ingrown radon-222 and its alpha emitting daughters.

10.6 The 72.5% acceptable results obtained by this method, even with the samples biased high, show the method to be an acceptable one for screening drinking water samples for radium-226.

Bibliography

1. Goldin, A.S., Determination of Dissolved Radium, Anal. Chem. 33, 406-409 (March 1961).

2. Kirby, H.W., Decay and Growth Tables for the Naturally Occurring Radioactive Series, Anal. Chem. 26, 1063-1071 (1954).

3. Harley, J.H., ed. EML Procedures Manual, U.S. DOE, Dept. HASL-300, Env. Meas. Lab., U.S. DOE, New York, N. Y. (1972).

SECTION 7
RADIUM-226 IN DRINKING WATER
RADON EMANATION TECHNIQUE
METHOD 903.1

1. Scope and Application

1.1 This method covers the measurement of radium-226 in a drinking water sample and would be employed after the gross alpha or the gross radium alpha screening technique had indicated possible non-compliance with the alpha radioactivity limits set forth in the Safe Drinking Water Act, PL 93-523. 40 FR 34324.

1.2 This method is specific for radium-226, and is based on the emanation and scintillation counting of radon-222, a daughter product of radium-226.

1.3 The detection limit for this method assures measuring radium-226 concentrations as low as 0.1 pCi/l.

2. Summary of Method

2.1 The radium-226 in the drinking water sample is concentrated and separated by coprecipitation on barium sulfate. The precipitate is dissolved in EDTA reagent, placed in a sealed bubbler and stored for ingrowth of radon-222. After ingrowth, the gas is purged into a scintillation cell. When the short-lived radon-222 daughters are in equilibrium with the parent ($\sim$4h), the scintillation cell is counted for alpha activity.

2.2 The absolute measurement of radium-226 is effected by calibrating the scintillation cell system with a standard solution of this nuclide.

3. Sample Handling and Preservation (see Sec. 3, Method 900.0).

4. Interferences

4.1 There are no radioactive interferences in this method.

5. Apparatus - See Appendix D for details and specifications.

5.1 Scintillation cell system. (Figure 1.)

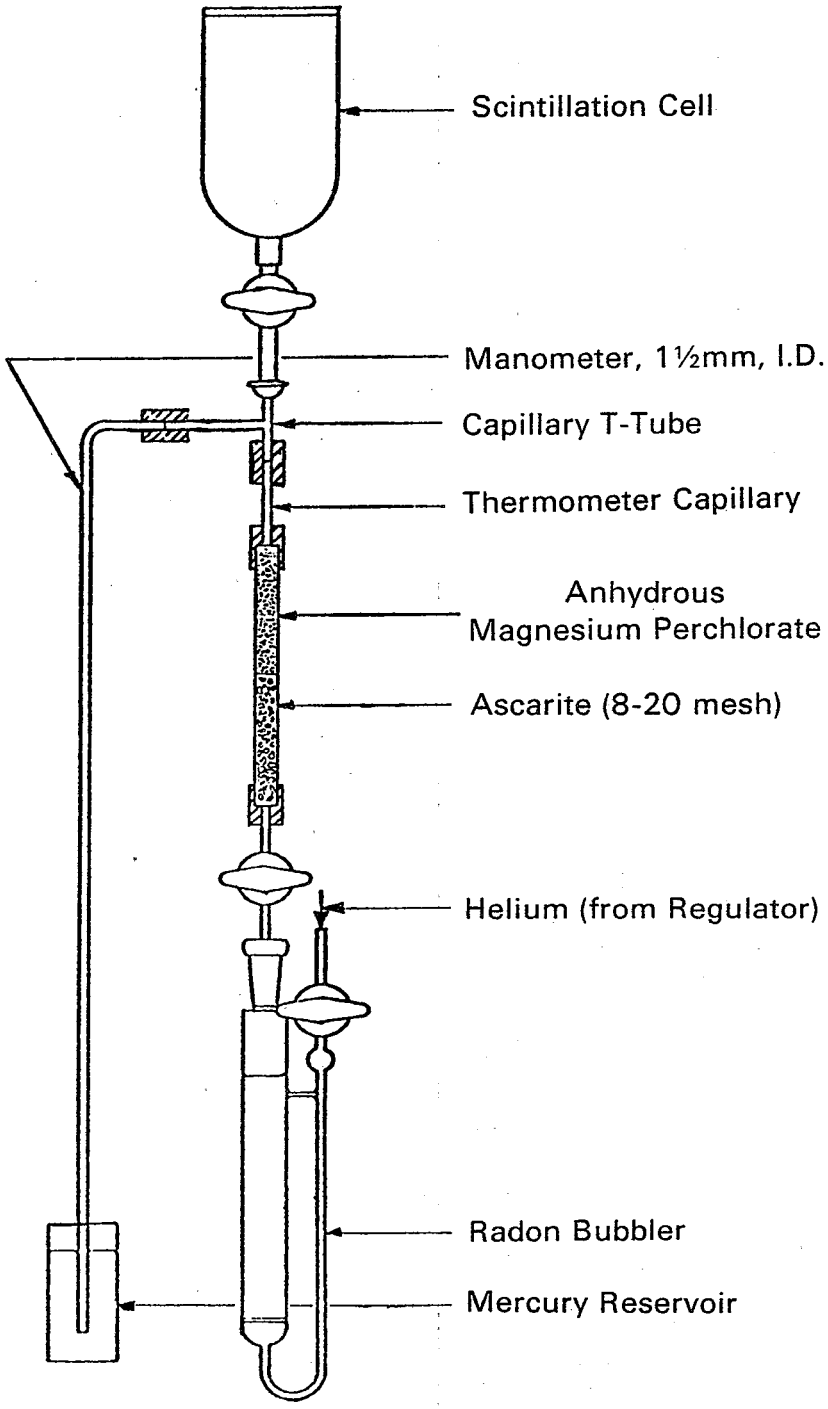

Figure 1. Radon emanation apparatus with scintillation cell

5.2 Radon emanation apparatus:

a) Radon bubbler - (Figure 2.)
b) Scintillation cell - (Figure 3.)

5.3 Electric hot plate

5.4 Analytical balance

5.5 Centrifuge

5.6 Glassware

6. Reagents

6.1 Distilled or deionized water.

6.2 Ammonium hydroxide, 15N: NH_4OH (conc.), sp. gr. 0.90, 56.6%.

6.3 Ascarite, drying reagent: 8-20 mesh.

6.4 Barium carrier, 16 mg/ml, standardized: (see Sec. 6, Method 903.0).

6.5 EDTA reagent, basic, (0.25M): Dissolve 20g NaOH in 750 ml water, heat and slowly add 93g disodium ethylenedinitriloacetate dihydrate, ($Na_2C_{10}H_{14}O_8N_2.2H_2O$) while stirring. After the salt is in solution, filter through coarse filter paper and dilute to 1 liter.

6.6 Helium, gas.

6.7 Hydrochloric acid, 12N: HCl (conc.), sp. gr. 1.19, 37.2%.

6.8 Magnesium perchlorate, $Mg(ClO_4)_2$: reagent grade.

6.9 Sodium hydroxide, 10N: Dissolve 40g NaOH in 50 ml water and dilute to 100 ml.

6.10 Standard radium-226 tracer solution: preferably purchased from National Bureau of Standards, Special Publication 260, 1978, SRM 4960. Prepare stock dilution equivalent to 50 pCi radium-226 per ml.

6.11 Sulfuric acid, 18N: Carefully mix 1 volume 36N H_2SO_4 (conc.) with 1 volume of water.

6.12 Sulfuric acid, 0.1N: Mix 1 volume 18N H_2SO_4 with 179 volumes of water.

7. Calibrations

7.1 The calibration constant of each scintillation cell must be

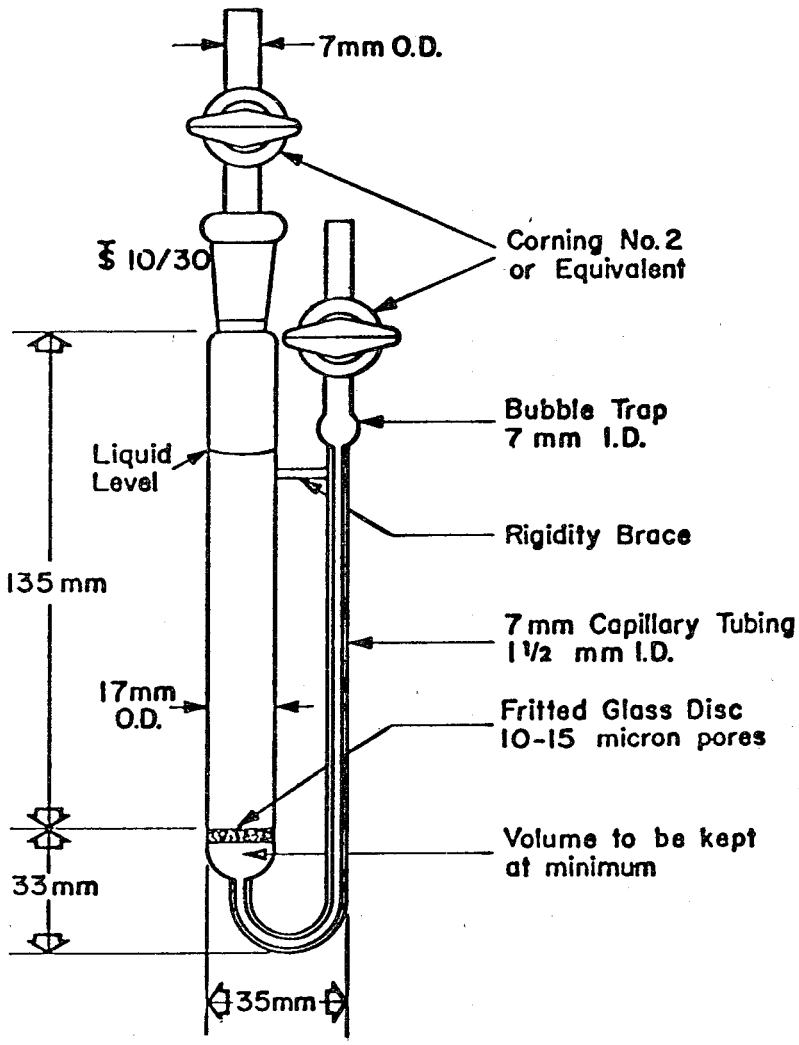

Figure 2. A typical radon bubbler

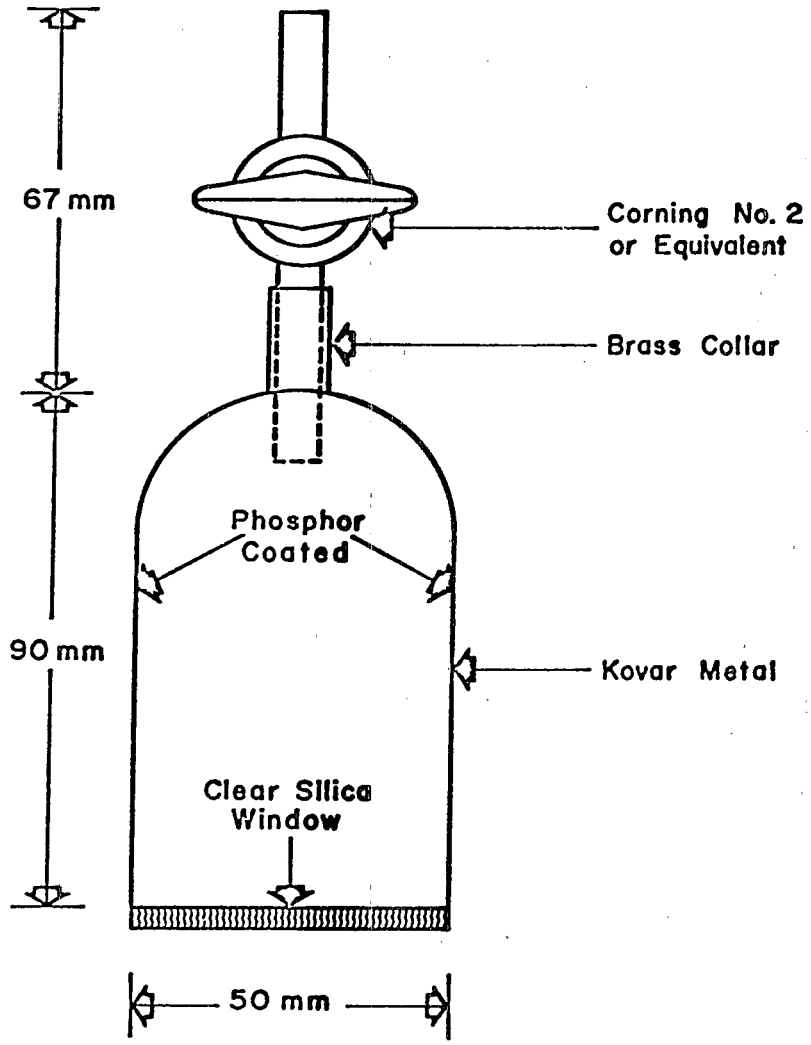

Figure 3. A typical scintillation cell for radon counting

determined using a standardized radium-226 solution with a labeled cell and a specific photon counter. This is determined as follows:

7.1.1 Place 50 pCi of the radium-226 standard solution in a bubbler (50 pCi of radium-226 will produce about 6 pCi radon-222 in 18 hours). Attach the bubbler to the radon assembly. (Fig. 1.)

7.1.2 With the scintillation cell disconnected, bubble helium gas through the solution for 20 minutes to remove all radon-222.

7.1.3 Close both stopcocks on the bubbler to establish zero time for ingrowth of radon-222.(Refer to 9.2) Set aside for approximately 18 hours.

7.1.4. Evacuate the scintillation cell and attach to the column and bubbler.

7.1.5. Proceed with steps 8.8 - 8.13, Radon Emanation Technique.

7.1.6. The calibration constant is determined from the radium-226 activity in the bubbler and the ingrowth time of radon-222.

7.2 The calibration constant includes the de-emanation efficiency of the system, the counting efficiency of the cell, and the alpha activity contributed by polonium-218 and polonium-214, which will be in equilibrium with radon-222 when the sample is counted 4 hours after the de-emanation. A 100-minute counting time will be sufficient for the standard and will eliminate the need to correct for decay of radon-222, which occurs during counting.

7.3 The bubbler used for the radium-226 standardization should not be used for sample analysis. It should be set aside to be retained for future calibrations. Each scintillation cell should be calibrated periodically with the radium-226 standard to ensure instrument quality control.

8. Procedure

8.1 To a 1000-ml drinking water sample, add 20 ml 12N HCl and 2.0 ml barium carrier and heat to boiling.

Note: If there is solid matter in the sample, do not filter before starting analysis. Follow procedure steps through 8.4, then filter solution into a clean centrifuge tube. Add 1 ml $(NH_4)_2SO_4$ (200 mg/ml) and stir thoroughly. Add glacial (17.4N) acetic acid (CH_3COOH) until barium sulfate precipitates, then add 2 ml excess. Digest in a hot water bath until precipitate settles. Centrifuge and discard supernate. Repeat step 8.4 and continue with radium analysis.

8.2 Cautiously and with vigorous stirring, add 20 ml 18N H_2SO_4. Digest 5 to 10 minutes and let precipitate settle overnight. Decant and discard supernate.

8.3 Slurry the precipitate and transfer to a centrifuge tube with a minimum amount of 0.1N H_2SO_4. Centrifuge and discard supernate. Wash twice with 0.1N H_2SO_4. Centrifuge and discard washes.

8.4 Add 20 ml basic EDTA reagent, heat in a water bath and stir well. Add a few drops 10N NaOH if the precipitate does not readily dissolve.

8.5 Transfer the solution to a radon bubbler (Fig. 2). Open both the upper and lower stopcocks and de-emanate the solution by slowly passing helium gas through the bubbler for about 20 minutes.

Note: The volume of these bubblers is usually greater than 20 ml allowing for at least a 1 cm air space between the bubbler and the stopper. In those instances where the solution volume exceeds the capacity of the bubbler, it will be necessary to continue the boiling in the water bath until the volume is reduced.

8.6 Close the two stopcocks, and record time. Store the solution for 4 to 8 days for ingrowth of radon-222 (Fig. 4).

8.7 At the end of the storage period, fill the upper half of an absorption tube with magnesium perchlorate and the lower half with ascarite.

Note: For minimizing corrections that would be required in subsequent calculations, the voids above the bubbler must be kept very small. Capillary tubing should be used whenever possible, and the drying tube volume with the ascarite and magnesium perchlorate must be kept to a minimum. A typical system consists of a drying tube 10 cm x 1.0 cm (I.D.), with each of the drying agents occupying 4 cm and being separated by small glass wool plugs. The column can be reused several times before the chemicals need to be replaced.

8.8 Attach the tube to the radon bubbler and then attach the evacuated scintillation cell (Fig. 3) to the tube. Open the stopcock on the cell and check the assembly for leaks. Gradually open the outlet stopcock on the bubbler, and when the stopcock is fully open and no further significant bubbling takes place, close the stopcock.

8.9 Adjust the helium gas pressure so that the gas flows at slightly above atmospheric pressure.

8.10 Connect the hose to the bubbler inlet and gradually open the inlet stopcock using the bubbling as a guide. When the stopcock can be

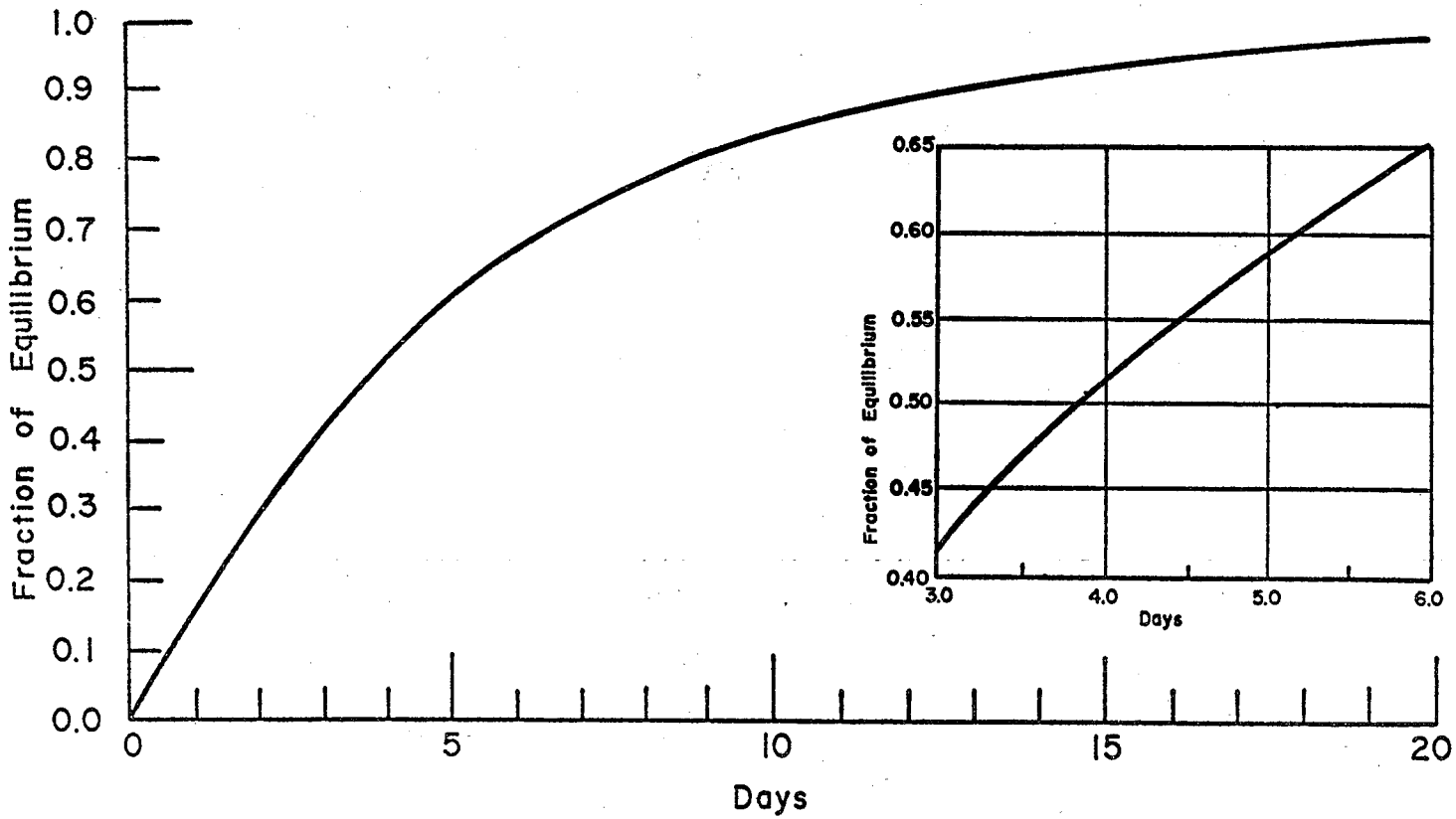

Figure 4. The growth of radon-222 from radium-226

fully opened without a significant amount of bubbling, the bubbler is essentially at atmospheric pressure again.

8.11 Open the outlet stopcock very slightly and allow bubbling to proceed at a rate, determined by experience, such that 15 to 20 minutes are required to complete de-emanation.

8.12 Toward the end of the de-emanation, when the vacuum is no longer effective, gradually increase the helium gas pressure. When the system is at atmospheric pressure, shut off the helium gas, disconnect the tubing from the bubbler inlet and close the inlet and outlet stopcocks of the cell and bubbler, and record time. This is the beginning of radon-222 decay and ingrowth of radon-222 daughters.

8.13 Store the scintillation cell for at least 4 hours to ensure equilibrium between radon and radon daughters. Count the alpha scintillations from the cell in a radon counter with a light-tight enclosure that protects the photomultiplier tube. Record the counting time to correct for the decay of radon-222.

Note: After each analysis, flush the cell three times by evacuation and filling with helium, and store filled with helium at atmospheric pressure. This procedure removes radon from the cell and prevents the build-up of radon daughter products. Before each analysis, the scintillation cell should be evacuated, filled with helium and counted to ascertain the cell background.

9. Calculations

9.1 Calculate the radium-226 concentration, D, in picocuries per liter as follows:

$$D = \frac{C}{2.22\ EV} \times \frac{1}{1-e^{-\lambda t_1}} \times \frac{1}{e^{-\lambda t_2}} \times \frac{t_3}{1-e^{-\lambda t_3}}$$

where:

C = net count rate, cpm,
E = calibration constant for the de-emanation system and the scintillation cell in counts per minute/disintegrations per minute of radon-222, (see 9.2),
V = liters of sample used,
t_1 = the elapsed time in days between the first and second de-emanations (steps 8.6 and 8.12) and λ is the decay constant of radon-222 (0.181 d^{-1}),
t_2 = the time interval in hours between the second de-emanation and counting and λ is the decay constant of radon-222 (0.00755 hr^{-1}),

t_3 = the counting time in minutes and λ is the decay constant of radon-222 (1.26×10^{-4} min^{-1}), and
2.22 = conversion factor from dpm/pCi.

9.2 The calibration constant, E, is determined by the following equation:

$$E = \frac{C}{A\,(1-e^{-\lambda t_1})\;(e^{-\lambda t_2})}$$

where:

C = net count rate, cpm,
A = activity of radium-226 in the bubbler (dpm),
t_1 = ingrowth time of radon-222 in hours,
t_2 = decay time of radon-222 in hours occurring between de-emanation and counting, and
λ = decay constant of radon-222, (0.00755 $hour^{-1}$).

10. Precision and Accuracy

A number of laboratories which participate in the EPA, EMSL-Las Vegas intercomparison program for radium-226 in water used this method in their analyses of water samples received in that program for the period 4/78 through 12/78. Five intercomparison studies for radium-226 in water were conducted during that period. Two of the five studies were "Performance Studies" in which the sample contained other radionuclides. In the other three studies the samples contained only radium-226, radium-228 and their decay products. The radium-226 concentrations in the test samples for the five studies ranged from 3.7 to 9.2 pCi/l, all low level, which should relate well to drinking water supplies. Data from those five studies were used for this precision and accuracy evaluation of the method.

10.1 The number of laboratories that participated in the five studies (labs that were called and indicated that they used this method) ranged from 12 to 17 laboratories per study. The results from one laboratory in one study was rejected as an "outlier" as determined by the T test (ASTM Standards, Part 31, page 15, 1978). All laboratories reported triplicate analyses for each study (one test sample per study). The total number of analyses for the five studies was 207 of which 174 were acceptable results (within 3 sigma of the known value, 1 sigma being 15% of the known value). This calculates to be 84% acceptability of results as determined by this method.

10.2 A statistical evaluation of the data from the five studies was made according to the methods of Youden(4) and Steiner(5). The coefficient of variation for within-laboratory error ranged from 6.4% to 19% with an average of 10.2% for the five studies. The coefficient of variation for systematic error between laboratories ranged from 14% to 18% with an average of 16.2% for the five studies. The coefficient of variation for the total error between laboratories based on a single analysis ranged from 16% to 26% with

an average of 19.4% for the five studies. A comparison of the grand average values with the known values in a test for systematic error in a method gave a value for one of the studies higher than the critical value, indicating a bias (low) for the method. However, values for the other four studies were well below the critical values, indicating no bias for the method.

Bibliography

1. Blanchard, R. L. Uranium Decay Series Disequilibrium in Age Determination of Marine Calcium Carbonates. Doctoral Thesis, Washington University, St. Louis, Mo. (June 1963).

2. Ferri, E., P. J. Magno, and L. R. Setter. Radionuclide Analysis of Large Numbers of Food and Water Samples. U. S. Department of Health, Education, and Welfare, Public Health Service Publication No. 999-RH-17 (1965).

3. Rushing, D. E. The Analysis of Effluents and Environmental Samples from Uranium Mills and of Biological Samples for Uranium, Radium and Polonium. SM/41-44, Symposium on Radiological Health and Safety, Vienna, Austria (August 1963).

4. Youden, W. J. "Statistical Techniques for Collaborative Tests." Statistical Manual of the AOAC Association of Official Analytical Chemists, Washington, D.C. 1975.

5. Steiner, E. H. "Planning and Analysis of Results of Collaborative Tests." Statistical Manual of the AOAC, Association of Official Analytical Chemists, Washington, D.C. 1975.

SECTION 8
RADIUM-228 IN DRINKING WATER
METHOD 904.0

1. Scope and Application

1.1 This method covers the measurement of radium-228 in drinking water and, if desired, the determination of radium-226 on the same sample. The Interim Primary Drinking Water regulations state that if the alpha screening test reveals a gross alpha activity above 5 pCi/l, a radium-226 analysis must also be performed. If the level of radium-226 is above 3 pCi/l, the sample must also be measured for radium-228.

1.2 This technique is devised so that the beta activity from actinium-228 which is produced by decay of radium-228, can be determined and related to the radium-228 that is present in the sample.

1.3 To quantify actinium-228 and thus determine radium-228, the efficiency of the beta counter for measuring the very short half-lived actinium-228 (avg. beta energy-0.404 keV) is to be calibrated with a beta source of comparable average beta energy.

2. Summary of Method

2.1 The radium in the drinking water sample is collected by coprecipitation with barium and lead sulfate, and purified by reprecipitation from EDTA solution. Both radium-226 and radium-228 are collected in this manner. After a 36-hour ingrowth of actinium-228 from radium-228, the actinium-228 is carried on yttrium oxalate, purified and beta counted. If radium-226 is also desired, the activity in the supernate can be reserved for method 903.1 by coprecipitation on barium sulfate, dissolving in EDTA and storing for ingrowth in a sealed radon bubbler.

3. Sample Handling and Preservation - (see Sec. 3, Method 900.0)

4. Interferences

4.1 As evidenced from the results of the performance studies, the presence of strontium-90 in the water sample gives a positive bias to the radium-228 activity measured.

4.2 As in the case of method 903.0, excess barium in the drinking water sample might result in a falsely high chemical yield.

5. Apparatus - See Appendix D for details and specifications

5.1 Gas-flow proportional counting system. (Low-background beta < 3 cpm).

5.2 Electric hot plate

5.3 Centrifuge

5.4 Membrane filters, metricel 47mm

5.5 Drying lamp

5.6 Glassware

5.7 Stainless steel counting planchets

5.8 Analytical balance

6. Reagents

6.1 Distilled or deionized water.

6.2 Acetic acid, 17.4N: glacial CH_3COOH (conc.), sp. gr. 1.05, 99.8%

6.3 Ammonium hydroxide, 15N: NH_4OH (conc.), sp. gr. 0.90, 56.6%.

6.4 Ammonium oxalate, 5%: Dissolve 5g $(NH_4)_2C_2O_4.H_2O$ in water and dilute to 100 ml.

6.5 Ammonium sulfate, 200 mg/ml: Dissolve 20g $(NH_4)_2SO_4$ in water and dilute to 100 ml.

6.6 Ammonium sulfide, 2%: Dilute 10 ml $(NH_4)_2S$, (20-24%), to 100 ml with water.

6.7 Barium carrier, 16 mg/ml, standardized: (see Sec. 6, Method 903.0).

6.8 Citric acid, 1M: Dissolve 19.2g $C_6H_8O_7.H_2O$ in water and dilute to 100 ml.

6.9 EDTA reagent, basic (0.25M): Dissolve 20g NaOH in 750 ml water, heat and slowly add 93g disodium ethylenedinitriloacetate dihydrate, $(Na_2C_{10}H_{14}O_8N_2.2H_2O)$ while stirring. After the salt is in solution, filter through coarse filter paper and dilute to 1 liter.

6.10 Lead carrier, 15 mg/ml: Dissolve 2.397g $Pb(NO_3)_2$ in water, add 0.5 ml 16N HNO_3 and dilute to 100 ml with water.

6.11 Lead carrier, 1.5 mg/ml: Dilute 10 ml lead carrier, (15 mg/ml), to 100 ml with water.

6.12 Methyl orange indicator, 0.1%: Dissolve 0.1g methyl orange indicator in 100 ml water.

6.13 Nitric acid, 16N: HNO_3 (conc.), sp. gr. 1.42, 70.4%.

6.14 Nitric acid, 6N: Mix 3 volumes 16N HNO_3 (conc.) with 5 volumes of water.

6.15 Nitric acid, 1N: Mix 1 volume 6N HNO_3 with 5 volumes of water.

6.16 Sodium hydroxide, 18N: Dissolve 72g NaOH in water and dilute to 100 ml.

6.17 Sodium hydroxide, 10N: Dissolve 40g NaOH in water and dilute to 100 ml.

6.18 Strontium carrier, 10 mg/ml: Dissolve 24.16 g $Sr(NO_3)_2$ in water and dilute to 1 liter.

6.19 Sulfuric acid, 18N: Cautiously mix 1 volume 36N H_2SO_4 (conc.) with 1 volume of water.

6.20 Yttrium carrier 18 mg/ml: Add 22.85g Y_2O_3 to an Erlenmeyer flask containing 20 ml water. Heat to boiling and continue stirring with a magnetic stirring hot plate while adding 16N HNO_3 in small amounts. Usually about 30 ml 16N HNO_3 is necessary to dissolve the Y_2O_3. Small additions of water may be required to replace that lost by evaporation. After total dissolution add 70 ml 16N HNO_3 and dilute to 1 liter with water.

6.21 Yttrium carrier, 9 mg/ml: Dilute 50 ml yttrium carrier, (18 mg/ml), to 100 ml with water.

6.22 Strontium-yttrium mixed carrier, 0.9 mg/ml Sr^{+2} - 0.9 mg/ml Y^{+3}:

a. Solution A: Dilute 10.0 ml yttrium carrier, (18 mg/ml), to 100 ml.

b. Solution B: Dissolve 0.4348g $Sr(NO_3)_2$ in water and dilute to 100 ml.

Combine Solutions A and B and label.

7. Calibrations

7.1 Counter efficiency: It is not practical to calibrate the beta counter with actinium-228, since its' half-life is only six hours. Standard strontium-89 ($t_{1/2}$ = 51d) may be substituted. Strontium-89 has an average beta energy of 0.589 KeV, while the average beta energy for actinium-228 is 0.404 KeV. A standard strontium-89 tracer solution can be used to determine beta efficiencies over a range of precipitate weights on the stainless steel planchet.

7.2 If radium-226 analyses are also required, see Sec. 7, Method 903.1.

8. Procedure[1]

8.1 For each liter of drinking water, add 5 ml 1M $C_6H_8O_7.H_2O$ and few drops methyl orange indicator. The solution should be red.

Note: At the time of sample collection add 2 ml 16N HNO_3 for each liter of water.

8.2 Add 10 ml lead carrier (15 mg/ml), 2 ml strontium carrier (10 mg/ml) 2.0 ml barium carrier (16 mg/ml), and 1 ml yttrium carrier (18 mg/ml); stir well. Heat to incipient boiling and maintain at this temperature for 30 minutes.

8.3 Add 15N NH_4OH until a definite yellow color is obtained, then add a few drops excess. Precipitate lead and barium sulfates by adding 18N H_2SO_4 until the red color reappears, then add 0.25 ml excess. Add 5 ml $(NH_4)_2SO_4$ (200 mg/ml) for each liter of sample. Stir frequently and keep at a temperature of about 90°C for 30 minutes.

8.4 Cool slightly, then filter with suction through a 47-mm metricel membrane filter (GA-6,0.45 μ-pore size). Make a quantitative transfer of precipitate to the filter by rinsing last particles out of beaker with a strong jet of water.

8.5 Carefully place filter with precipitate in the bottom of a 250 ml beaker. Add about 10 ml 16N HNO_3 and heat gently until the filter completely dissolves. Transfer the precipitate into a polypropylene centrifuge tube with additional 16N HNO_3 . Centrifuge and discard supernate.

8.6 Wash the precipitate with 15 ml 16N HNO_3, centrifuge, and discard supernate.

8.7 Repeat step 8.6.

8.8 Add 25 ml basic EDTA reagent, heat in a hot water bath, and stir well. Add a few drops 10N NaOH if the precipitate does not readily dissolve.

8.9 Add 1 ml strontium-yttrium mixed carrier and stir thoroughly. Add a few drops 10N NaOH if any precipitate forms.

8.10 Add 1 ml $(NH_4)_2SO_4$ (200 mg/ml) and stir thoroughly. Add 17.4N CH_3COOH until barium sulfate precipitates, then add 2 ml excess. Digest in a hot water bath until precipitate settles. Centrifuge and discard supernate.

8.11 Add 20 ml basic EDTA reagent, heat in a hot water bath, and stir until precipitate dissolves. Repeat steps 8.9 and 8.10. (Note time of last barium sulfate precipitation; this is the beginning of the actinium-228 ingrowth time.)

8.12 Dissolve the precipitate in 20 ml basic EDTA reagent as before, then add 1.0 ml yttrium carrier (9 mg/ml) and 1 ml lead carrier (1.5 mg/ml). If any precipitate forms, dissolve by adding a few drops 10N NaOH. Cap the polypropylene tube and age at least 36 hours.

8.13 Add 0.3 ml $(NH_4)_2S$ and stir well. Add 10N NaOH dropwise with vigorous stirring until lead sulfide precipitates, then add 10 drops excess. Stir intermittently for about 10 minutes. Centrifuge and decant supernate into a clean tube.

8.14 Add 1 ml lead carrier (1.5 mg/ml), 0.1 ml $(NH_4)_2S$, and a few drops 10N NaOH. Repeat precipitation of lead sulfide as before. Centrifuge and filter supernate through Whatman #42 filter paper into a clean tube. Wash filter with a few ml water. Discard residue.

8.15 Add 5 ml 18N NaOH, stir well and digest in a hot water bath until yttrium hydroxide coagulates. Centrifuge and decant supernate into a beaker. Save for barium yield determination, step 8.20 (Note time of yttrium hydroxide precipitation; this is the end of the actinium-228 ingrowth time and beginning of actinium-228 decay time.)

8.16 Dissolve the precipitate in 2 ml 6N HNO_3. Heat and stir in a hot water bath about 5 minutes. Add 5 ml water and reprecipitate yttrium hydroxide with 3 ml 10N NaOH. Heat and stir in a hot water bath until precipitate coagulates. Centrifuge and discard supernate.

8.17 Dissolve precipitate with 1 ml 1N HNO_3 and heat in hot water bath a few minutes. Dilute to 5 ml and add 2 ml 5% $(NH_4)_2C_2O_4.H_2O$. Heat to coagulate, centrifuge and discard supernate.

8.18 Add 10 ml water, 6 drops 1N HNO_3 and 6 drops 5% $(NH_4)_2C_2O_4.H_2O$. Heat and stir in a hot water bath a few minutes. Centrifuge and discard supernate.

8.19 To determine yttrium yield, transfer quantitatively to a tared stainless steel planchet with a minimum amount of water. Dry under an infra-red lamp to a constant weight and count in a low-background beta counter.

8.20 To the supernate from step 8.15, add 4 ml 16N HNO_3 and 2 ml $(NH_4)_2SO_4$ (200 mg/ml), stirring well after each addition. Add 17.4N CH_3COOH until barium sulfate precipitates, then add 2 ml excess. Digest on a hot plate until precipitate settles. Centrifuge and discard supernate.

8.21 Add 20 ml basic EDTA reagent, heat in a hot water bath, and stir until precipitate dissolves. Add a few drops 10N NaOH if precipitate does not readily dissolve.

8.22 Add 1 ml $(NH_4)_2SO_4$ (200 mg/ml) and stir thoroughly. Add 17.4N CH_3COOH until barium sulfate precipitates, then add 2 ml excess. Digest in a hot water bath until precipitate settles. Centrifuge and discard supernate.

8.23 Wash precipitate with 10 ml water. Centrifuge and discard supernate.

8.24 Transfer precipitate to a tared stainless steel planchet with a minumum amount of water. Dry under an infra-red lamp and weigh for barium yield determination.

9. Calculation

9.1 Calculate the radium-228 concentration, D, in picocuries per liter as follows:

$$D = \frac{C}{2.22 \times EVR} \times \frac{\lambda t_2}{(1-e^{-\lambda t_2})^*} \times \frac{1}{(1-e^{-\lambda t_3})} \times \frac{1}{e^{-\lambda t_1}}$$

where:

C = average net count rate, cpm,
E = counter efficiency, for actinium-228, or comparable beta energy nuclide
V = liters of sample used,
R = fractional chemical yield of yttrium carrier (step 8.19) multiplied by fractional chemical yield of barium carrier (step 8.24),
2.22 = conversion factor from disintegrations/minute to picocuries,
λ = the decay constant for actinium-228 (0.001884 min^{-1}),

$*\frac{\lambda t_2}{(1-e^{-\lambda t_2}}$ is a factor to correct the average count rate to count rate at beginning of counting time.

t_1 = the time interval (in minutes) between the first yttrium hydroxide precipitation in step 8.15 and the start of the counting time,

t_2 = the time interval of counting in minutes, and

t_3 = the ingrowth time of actinium-228 in minutes measured from the last barium sulfate precipitation in step 8.11 to the first yttrium hydroxide precipitation in step 8.15.

10. Precision and Accuracy

10.1 In a single laboratory evaluation, an EMSL-Las Vegas Performance Sample was analyzed in replicate for radium-228. The known value of the water sample was 12.7 ± 1.9 pCi per liter. The grand average reported by 33 laboratories was 17.1 ± 8.8 pCi per liter indicating a positive bias reflecting the presence of other beta emitters in the sample.

The result of the nine replicate analyses for radium-228 expressed in pCi/l were:

16.5	16.1	16.6
16.5	16.4	16.6
15.5	16.7	16.8

The average and standard deviation of the method was 16.4 ± 0.4 pCi/l.
The accuracy of the method based on the known value was +29%.
The accuracy of the method based on the reported grand average was -4%.
The precision of the method was ±2.5%.

10.2 A number of laboratories which participate in the EPA, EMSL-Las Vegas intercomparison program for radium-228 in water used this method in their analyses of water samples received in that program for the period 9/78 to 6/79. During that period five studies for radium-228 in water were conducted. Three of the studies were crosscheck samples which contained only radium-228 and radium-226 in water. The other two studies were performance (blind) samples which contained other radionuclides, including strontium-90. Data from the five studies were used for this precision and accuracy statement of the method. However, data from the two types of studies (crosscheck and performance) are treated separately because there appears to be a bias in the performance sample studies.

The number of laboratories used for this data ranged from 8 to 15 laboratories per study. All laboratories reported triplicate analyses for each study (one test sample per study). The total number of analyses for the three cross check studies was 78, of which 60 were acceptable results (within 3 sigma of the known value, 1 sigma being 15% of the known value). This calculates to

be 77% acceptability of results as determined by this method. The total number of analyses for the two performance studies was 72, of which 36 were acceptable for a 50% acceptability of results.

A statistical evaluation of the three cross check studies and the two performance studies was done according to the methods of Youden[2] and Steiner[3]. The coefficient of variation for within-laboratory error was 15%, 19%, and 18% for the three cross check studies; and was 21% for the two performance studies. The coefficient of variation for systematic error between laboratories was 23%, 23%, and 21% for the three cross check studies; and was 23% and 25% for the two performance studies. The coefficient of variation for the total error between laboratories based on a single analysis was 28%, 29%, and 28% for the three crosscheck studies; and was 31% and 27% for the two performance studies.

A comparison of the grand average values with the known values in a test for systematic error in a method gave a value for one of the cross check studies higher than the critical value, indicating a bias (low) for the method. However, values for the other two crosscheck studies were well below the critical values, indicating no bias for the method. On the other hand, when the same test was applied to the data from the two performance studies, a high bias was indicated for both studies (see Sec. 10.3 below).

10.3 Test for Method Bias

Study	R(pCi/l)	x (pCi/l)	Calculated t	Critical t
Crosscheck				
9/78	20.8	17.0	2.56	2.32
12/78	8.9	8.6	0.43	2.23
3/79	13.6	12.6	1.05	2.32
Performance				
10/78	5.4	6.8	3.01	2.15
4/79	6.2	10.7	5.00	2.28

This is a standard t-test with (n-1) degrees of freedom

$$t = \frac{(\bar{x}-R)\sqrt{n}}{S_x}$$

where:

$\bar{x}$ = mean value of reported averages
R = known value
n = number of reported averages
S_x = standard deviation for the set of n reported averages.

Although the addition of man-made radionuclides to the performance samples may be creating samples that are somewhat unreal it is desirable that an approved EPA reference method for radium-228 in drinking water would not be biased by those radionuclides.

The radium-228 concentrations in the test samples for the three crosschecks and two performance studies are given in the above table (the R values). These are all relatively low level and should relate well to drinking water supplies.

References

1. Johnson, J.O. Determinaton of Radium-228 in Natural Waters. Radiochemical Analysis of Water, Geological Survey Water - Supply Paper 1696-G., U.S. Govt. Printing Office, Washington, D.C. (1971).

2. Youden, W. J. "Statistical Techniques for Collaborative Test," Statistical Manual of the AOAC, Association of Official Analytical Chemists, Washington, D.C. (1975).

3. Steiner, E.H. "Planning and Analysis of Results of Collaborative Tests," Statistical Manual of the AOAC, Association of Official Analytical Chemists, Washington, D.C. (1975).

SECTION 9
RADIOACTIVE STRONTIUM IN DRINKING WATER
Method 905.0

1. Scope and Application

1.1 This method covers the measurement of total strontium and soluble strontium-89 and strontium-90 in drinking water. Some naturally insoluble (and probably suspended) forms of strontium-89 and strontium-90 would also be measured by this method when samples of such drinking water supplies are acid-preserved before analysis.

1.2 The Drinking Water Regulations under the Safe Drinking Water Act set maximum contaminant concentrations for radionuclides in drink ing water based on a 2 liter per day drinking water intake using the 168 hour data listed in Handbook 69, National Bureau of Standards. The maximum contaminant concentration for strontium-89 and strontium-90 are 80 pCi/l and 8 pCi/l, respectively, the critical organ being bone marrow. If other radionuclides are also present in the drinking water, the sum of their annual dose equivalent must not exceed 4 mrem per year. The Regulations also give a required sensitivity of measurement which is defined in terms of a detection limit. The required detection limits given for strontium-89 and strontium-90 are 10 pCi/l and 2 pCi/l, respectively. Appendix C has equations for calculating the counting time necessary to meet the required detection limit.

2. Summary of Method

2.1 Stable strontium carrier is added to the drinking water sample and strontium-89 and strontium-90 are precipitated from the solution as insoluble carbonates. Interferences from calcium and some radionuclides are removed by one or more precipitations of the strontium carrier as strontium nitrate. Barium and radium are removed as the chromate. The yttrium-90 daughter of strontium-90 is removed by a hydroxide precipitation step and the separated combined strontium-89 and strontium-90 are counted for beta particle activity. The counting result, immediately ascertained, represents the total strontium activity (strontium-90 + strontium-89) plus an insignificant fraction of the yttrium-90 that has grown into the separated strontium-90. The yttrium-90 daughter grows in again and is then separated with stable yttrium carrier as hydroxide and finally precipitated as oxalate and beta counted. The strontium-90 concentration is determined by the yttrium-90 activity and the strontium-89 concentration is then determined by difference.

2.2 Counting efficiency data must be obtained with standard strontium-89, strontium-90, and yttrium-90 activities. These data are used to make corrections since strontium-89, strontium-90, and yttrium-90 emit beta particles with different energies.

3. Sample Handling and Preservation

3.1 It is recommended that samples be preserved with acid at the time of collection. For preservation, sufficient acid should be added to make the sample pH < 2.

3.2 The Drinking Water Regulations allow for the option of quarterly compositing for an annual analysis or averaging the analyses of four quarterly samples. It is especially recommended to preserve composited samples.

3.3 It is recommended that no less than one liter size samples be collected for analysis.

4. Interferences

4.1 Radioactive barium and radium will be carried down with radioactive strontium as carbonate. This method includes steps to separate strontium from barium and radium.

4.2 Samples that naturally contain significant amounts of stable strontium will cause errors in the recovery of the added strontium carrier. Blank samples to which no strontium carrier is added should be run to determine natural strontium content. Hard waters contain calcium which precipitates with the strontium in the initial carbonate precipitation. If not separated, the calcium will cause errors in the recovery of the strontium carrier. Repeated precipitations with 16N HNO_3 (conc.) will eliminate this interference.

5. Apparatus - See Appendix D for details and specifications.

5.1 Low background beta counting system (< 3 cpm background on the beta voltage plateau is recommended).

5.2 Centrifuge and 50 ml centrifuge tubes

5.3 Drying oven

5.4 Hot water bath

5.5 Electric hot plate

5.6 Analytical balance

5.7 pH meter

5.8 Desiccator, aluminum and/or glass

5.9 Stainless steel planchets, 2-inch diameter by 1/4-inch deep

5.10 Sintered-glass (fine) crucibles

5.11 Plastic ring and disc mounts

5.12 Mylar film

5.13 Teflon filter holder

5.14 Drying lamps

5.15 Glassware

6. Reagents

6.1 Distilled or deionized water is to be used, and all chemicals should be of "reagent-grade" or equivalent whenever they are commercially available.

6.2 Strontium carrier (10 mg/ml): Dissolve 24.16g $Sr(NO_3)_2$ in water and dilute to 1 liter in a volumetric flask with water. Mix thoroughly.

Standardization: (In triplicate).

Carefully pipet 10.0-ml portions of the strontium carrier solution into separate 50-ml centrifuge tubes. Add 1 ml 6N NaOH and heat in a water bath. Slowly, and with stirring, add 15 ml of 2N Na_2CO_3 solution (see sodium carbonate solution below) and continue digesting for 15 to 20 minutes. Allow to cool and filter the $SrCO_3$ precipitate through a tared sintered-glass (fine) crucible. Wash the precipitate and the crucible walls with three 5-ml portions of distilled water adjusted to pH 8 with 6N NH_4OH, and with three 5-ml portions of acetone. Dry the crucible for 30 minutes in a 105°C oven. Cool the crucibles in a desiccator and weigh.

$$\text{Strontium, mg/ml} = \frac{\text{mg of } SrCO_3 \times 0.5935}{10 \text{ ml}}$$

6.3 Yttrium carrier (10 mg/ml): Dissolve 43g $Y(NO_3)_3.6H_2O$ in water plus 5 ml 16N HNO_3 (conc.) and dilute to 1 liter in a volumetric flask with water. Mix thoroughly.

Standardization: (In triplicate).

Carefully pipet 10.0-ml portions of the yttrium carrier solution into separate 50-ml centrifuge tubes. Add 30 ml saturated $(NH_4)_2C_2O_4.H_2O$ to each centrifuge tube and stir. Digest in a hot water bath (near boiling) for 30 minutes. Cool in an ice bath. Filter the precipitate onto a Whatman #42 filter paper, then ignite in a tared crucible at 800°C for 1 hour to convert the oxalate to the oxide. Cool and weigh the crucible and calculate the yttrium concentration from the following equations.

$$Y/Y_2O_3 = 2 \times 88.92/225.84 = 0.7875$$

$$\text{yttrium, mg/ml} = \frac{\text{mg of } Y_2O_3 \times 0.7875}{10 \text{ ml}}$$

6.4 Acetic acid, 5.8N: Mix 1 volume 17.4N CH_3COOH (glacial) with 2 volumes of water.

6.5 Acetone, $(CH_3)_2CO$: anhydrous.

6.6 Ammonium acetate buffer: Dissolve 154g $NH_4C_2H_3O_2$ in 800 ml of water, add 57 ml 17.4N CH_3COOH (glacial), adjust the mixture to pH 5.5 using CH_3COOH or NH_4OH. Dilute to 1 liter.

6.7 Ammonium hydroxide, 15N: NH_4OH (conc.), sp. gr. 0.90, 56.6%.

6.8 Ammonium hydroxide, 6N: Mix 2 volumes 15N NH_4OH (conc.) with 3 volumes of water.

6.9 Ammonium hydroxide, 0.1N: Mix 1 volume 15N NH_4OH (conc.) with 150 volumes of water.

6.10 Ammonium oxalate, saturated: Into 100 ml boiling water, dissolve 10g $(NH_4)_2C_2O_4.H_2O$. Cool.

6.11 Barium carrier, (10 mg/ml): Dissolve 19.0g $Ba(NO_3)_2$ in water and dilute to 1 liter with water.

6.12 Hydrochloric acid, 6N: Mix 1 volume 12N HCl (conc.) with 1 volume of water.

6.13 Methyl red indicator, 0.1%: Dissolve 0.1g of methyl red in 100 ml ethanol.

6.14 Nitric acid, 16N: HNO_3 (conc.) sp. gr. 1.42, 70.4%.

6.15 Nitric acid, 6N: Mix 3 volumes 16N HNO_3 (conc.) with 5 volumes of water.

6.16 Nitric acid, 1N: Mix 1 volume 6N HNO_3 with 5 volumes of water.

6.17 Phenolphthalein indicator, 1%: Dissolve 1g phenolphthalein in 50 ml ethanol and add 50 ml water.

6.18 Sodium carbonate, 2N: Dissolve 124g $Na_2CO_3.H_2O$ (or 106g Na_2CO_3) in water and dilute to 1 liter with water.

6.19 Sodium chromate, 0.5M: Dissolve 117g $Na_2CrO_4.4H_2O$ in water and dilute to 1 liter with water.

6.20 Sodium hydroxide, 6N: Dissolve 240g NaOH in water and dilute to 1 liter with water.

6.21 Wetting agent solution: e.g. Photo-Flo, Eastman Kodak Co.

7. Calibrations

7.1 Counting Efficiencies - Separate counting efficiencies should be determined for strontium-89 and strontium-90 using known amounts of the respective radioactive standards and 20.0 mg of strontium carrier, precipitated as carbonate and counted. A strontium-90 precipitate is prepared after separation of the yttrium-90 daughter by the following procedure. Add a known amount of strontium-90 standard, in the order of 1000 disintegrations per minute (dpm), and 20 mg of strontium carrier to a 50-ml centrifuge tube, add 20 ml of water and proceed as in steps 8.9 through 8.11. Then for the yttrium-90 counting efficiency, continue with steps 8.12 through 8.16.

7.2 Sources of supply: For strontium-90-yttrium-90, the National Bureau of Standards, Washington, DC offers a standard solution (SRM 4234) as listed in their latest catalog #260.

For strontium-89, Amersham Radiochemicals, Arlington Heights, Illinois, offers a standardized aqueous solution essentially free from strontium-90. This item is listed as SMZ.64 in their latest catalog.

Standard sources of strontium-89 and strontium-90 are also available from the Quality Assurance Division, U.S. Environmental Protection, EMSL-Las Vegas.

8. Procedure

8.1 Transfer 1-liter water sample aliquots to 2-liter beakers. Add 2.0 ml each of strontium and barium carrier solutions to each sample and blank beakers. Heat the samples to boiling and add 6N NaOH while stirring, to the phenolphthalein end point (red color), and add 50 ml 2N Na_2CO_3 solution. Continue heating to near boiling for 1 hour with occasional stirring. Then set the beakers aside for at least 2 hours, allowing the carbonate precipitate to settle.

8.2 Decant most of the clear supernate and discard it. With the remainder of the supernate and necessary water washes (adjusted to pH 8 with 6N NH_4OH), quantitatively transfer the precipitate to a 50-ml centrifuge tube. Centrifuge and discard the supernate. This precipitate will contain the strontium and barium carriers.

8.3 Dissolve the precipitate by the dropwise addition of 4 ml 16N HNO_3.

8.4 Add 20 ml 16N HNO_3 to the centrifuge tube, cool in an ice bath and stir. Centrifuge and discard the supernate which will contain a significant fraction of the calcium present in the sample.

8.5 Add 20 ml 16N HNO_3 to the centrifuge tube, cool in an ice bath and stir. Centrifuge and discard supernate.

Note: If drinking water samples contain much calcium (hardness), it will be necessary to repeat step 8.5.

8.6 Dissolve the strontium and barium nitrate precipitate in 25 ml water, add 2 drops methyl red indicator, neutralize to yellow color with 6N NH_4OH, then adjust the pH back to red color by adding 5.8N CH_3COOH dropwise.

8.7 Add 5 ml ammonium acetate buffer solution, and heat in a hot water bath. Add, with stirring, 2 ml 0.5M Na_2CrO_4 and digest in the hot water bath for 15 minutes. Cool the reaction mixture and centrifuge. Transfer the supernate to a clean 50-ml centrifuge tube, and discard the barium chromate residue.

Note: This residue can be saved if radioactive barium, radium, or lead analysis is desired.

8.8 To the buffered chromate supernate add 2 ml 15N NH_4OH and heat in a hot water bath. Add 5 ml 2N Na_2CO_3 solution and digest for 15 minutes. Cool, centrifuge, and discard the supernate.

Note: In the next step, the strontium-89 and strontium-90 are separated from yttrium-90 with a yttrium carrier scavenge to start a specific ingrowth period and to get a separate radiostrontium count in the following steps.

8.9 Add a few drops 16N HNO_3 to the carbonate precipitate, then add 25 ml water and 1 ml yttrium carrier. Add 1 drop of wetting agent solution (such as "Photo-Flo," an Eastman Kodak Company film processing product) and 5 ml 15N NH_4OH. Heat in a hot water bath for 15 minutes with occasional stirring. Centrifuge and transfer the supernate to a clean 50-ml centrifuge tube. Wash the yttrium hydroxide precipitate with 5 ml water, centrifuge and add this wash to the supernate. Note the time of this yttrium hydroxide precipitation which marks the beginning of the yttrium-90 ingrowth period. From this point on it is important to proceed without

delay to the final separation and count of the strontium-89 and strontium-90 activity to minimize ingrowth of yttrium-90.

Note: Concentrated NH_4OH sometimes contains CO_2 in solution which will cause precipitation of some of the strontium carrier in this step. If low carrier recoveries are obtained in step 8.11, then for subsequent strontium analyses, anhydrous NH_3 gas may be substituted for concentrated NH_4OH in step 8.9 by bubbling NH_3 gas in the sample solution until the phenolphthalein end point is reached, and then 5 minutes more. The same precaution might be taken in step 8.14 to prevent carrydown of the strontium-90 as the carbonate precipitate in that step.

8.10 Add 5 ml 2N Na_2CO_3 to the supernate from step 8.9, heat in a hot water bath for about 10 minutes, centrifuge and discard the supernate.

8.11 Slurry the strontium carbonate precipitate with a few ml water and transfer quantitatively to a tared glass fiber filter. Wash the precipitate with three 10-ml portions of water adjusted to pH 8 with NH_4OH, then with three 10-ml portions of acetone. During filtration and washes of the strontium carbonate, minimize the time of air flow through the filter to avoid collection of radon daughters. Dry the filter at 105°C for 10 minutes, then weigh, mount and count (within 2 hours). This count gives the total of strontium-89 and strontium-90 activities, plus the ingrown yttrium-90. Note the time of this count as it must be corrected for yttrium-90 ingrowth (time between steps 8.9 and 8.11).

Note A: An alternative to step 8.11 involves the collection and counting of the strontium carbonate precipitate on a tared stainless steel planchet. For this, the approach is as follows:

1. Slurry the strontium carbonate precipitate with a few ml water and transfer quantitatively to a tared stainless steel planchet. Dry under infrared lamp.

2. Cool, weigh, and beta count (within 2 hours).

Note B: The calculation of the total strontium activity D, in the sample at this point in time can be made as follows:

$$D = \frac{C}{2.22 \times EVR}$$

where:

C = net count rate, cpm,
E = counter efficiency, for strontium-90
V = liters of sample used,

R = fractional chemical yield, and
2.22 = conversion factor from dpm/pCi.

Strontium-90 (By Yttrium-90)

8.12 After counting the strontium carbonate for strontium-89 and strontium-90 activity, store the filter or the planchet for a measured period of ingrowth, then proceed with the following steps for yttrium-90 separation. A 2-week or longer ingrowth period is recommended for samples with very low strontium-90 activity. Step 8.9 was the beginning of this ingrowth period.

8.13 Undo the mylar covering from the nylon ring and disc, and transfer the filter to a small funnel which has been placed to drain into a 50 ml centrifuge tube. Dissolve the strontium precipitate by carefully wetting the filter with 5 ml of 6N HNO_3. Wet the filter with 2.0 ml yttrium carrier. Rinse the strontium and yttrium into the centrifuge tube by washing the filter with four 5-ml portions of 1N HNO_3. Remove the funnel from the centrifuge tube, discard the filter, and add 1 drop of wetting agent solution to the centrifuge tube. Swirl the tube to mix the contents thoroughly.

Note: In the case of the stainless steel planchet:

1. After the period for yttrium-90 ingrowth, slurry the precipitate on the planchet with 2 ml water and transfer to a centrifuge tube with the aid of a rubber policeman. To make the transfer quantitative, wash the residue from the planchet with a small amount of 1N HNO_3. Dissolve the precipitate in the tube with sufficient 1N HNO_3, and dilute with water to 10 ml.

2. Add 2.0 ml yttrium carrier and stir.

3. Boil to expel dissolved carbon dioxide; cool to room temperature.

8.14 Precipitate the yttrium as hydroxide by adding 10 ml 15N NH_4OH to the centrifuge tube, stirring and heating for 10 minutes in a hot water bath. Cool, centrifuge and decant supernate into a 100-ml beaker. Note time of last precipitation; this is the end of yttrium-90 ingrowth and the beginning of yttrium-90 decay.

8.15 Dissolve precipitate in 1 ml 1N HNO_3 and dilute with water to 10 ml.

8.16 Reprecipitate yttrium by dropwise addition of 15N NH_4OH.

8.17 Centrifuge and combine supernate with solution in the 100-ml beaker (step 8.14).

8.18 Repeat steps 8.15, and 8.16. Save the combined supernates in the beaker for strontium gravimetric yield determination, step 8.22.

Note: Steps 8.22 to 8.25 are a repeat of the strontium carbonate precipitation to determine chemical yield after the yttrium has been removed.

8.19 Dissolve the precipitate in 15 ml water containing 2 ml 6N HCl. Precipitate the yttrium as oxalate by adding 20 ml saturated $(NH_4)_2C_2O_4$ and heating for 30 minutes in a hot water bath (near boiling). Cool in an ice bath and then filter the yttrium oxalate onto a Whatman #42 filter (4.25 cm diameter). Wash the precipitate with three 5-ml portions of water, then with three 5-ml portions of acetone. Air dry the filter for about 1 hour.

Note: A pH of 1.7-1.9 in the solution from which yttrium oxalate is being precipitated is necessary to get a uniform $9H_2O$ hydrate precipitate. This is necessary if the analyst prefers and is going to weigh the yttrium oxalate for chemical yield. Also, the analyst may then prefer to use a tared glass fiber filter instead of a Whatman #42 paper filter. The filter plus oxalate precipitate is weighed to determine chemical yield (recovery). See note following 9.1 for calculations. If this procedure is followed, step 8.21 can be eliminated.

8.20 Mount filter on a plastic ring and disc, and count for yttrium-90 activity. Record the time of the counting for decay correction (time between 8.14 and count time).

8.21 Undo the mylar covering, and transfer the filter to a tared crucible. Ignite at 800°C for 1 hour in a muffle furnace to convert the oxalate to the oxide. Cool and weigh the crucible. Determine the yttrium recovery (see Section 9.1).

8.22 Warm the combined supernates from step 8.14, add 5 ml 2N Na_2CO_3, and digest for 10 minutes. Cool, centrifuge, and discard supernate.

8.23 Wash the $SrCO_3$ with 15 ml water and discard wash solution.

8.24 Slurry with a few ml water and transfer quantitatively to a tared stainless-steel planchet. Dry under infrared lamps.

8.25 Cool and weigh the planchet. Determine the strontium recovery (see Section 9.1).

9. Calculations

9.1 Chemical yields for strontium and yttrium

$$a = \text{Yield factor for Sr} = \frac{\text{mg } SrCO_3 \text{ recovered}}{\text{mg Sr carrier added (as carbonate)}}$$

20.0 mg of strontium is equivalent to 33.7 mg $SrCO_3$.

$$b = \text{Yield factor for Y} = \frac{\text{mg } Y_2O_3 \text{ recovered}}{\text{mg Y carrier added (as oxide)}}$$

20.0 mg of yttrium is equivalent to 25.4 mg of Y_2O_3.

Note: If chemical yield is to be determined from the yttrium oxalate precipitate the following calculations are used.

$$b = \text{yield factor for Y} = \frac{\text{mg } Y_2(C_2O_4)_3 \cdot 9H_2O}{\text{mg Y carrier added (as oxalate)}}$$

20.0 mg of yttrium is equivalent to 67.9 mg of yttrium oxalate, $Y_2(C_2O_4)_3 \cdot 9H_2O$.

9.2 Calculations for Activities at Equilibrium Conditions:

Indicated cpm values are net cpm (reagent blank, including background, subtracted).

$$^{90}Y \text{ dpm} = \frac{^{90}Y \text{ cpm}}{abefi} = {}^{90}Sr \text{ dpm}$$

$$^{90}Sr \text{ cpm} = {}^{90}Y \text{ dpm} \times c$$

$$\text{Total } ^{89,90}Sr \text{ cpm} = \text{total cpm } (SrCO_3) - \text{ingrown } ^{90}Y \text{ cpm}$$

$$\text{Ingrown } ^{90}Y \text{ cpm} = {}^{90}Sr \text{ cpm} \times e \times g$$

$$^{89}Sr \text{ cpm} = \frac{\text{total Sr cpm}}{a} - {}^{90}Sr \text{ cpm} - {}^{90}Sr \text{ dpm} \times e \times g$$

$$^{89}Sr \text{ dpm} = \frac{^{89}Sr \text{ cpm}}{d}$$

$$^{90}Sr \text{ pCi/liter} = \frac{^{90}Sr \text{ dpm}}{2.22 \times V}$$

$$^{89}Sr \text{ pCi/liter} = \frac{^{89}Sr \text{ dpm}}{2.22 \times V}$$

where:

c = strontium-90 counting efficiency,
d = strontium-89 counting efficiency,
e = yttrium-90 counting efficiency,
f = yttrium-90 decay factor,
g = yttrium-90 ingrowth factor, for unwanted yttrium-90 in total strontium-89, strontium-90 count,
h = strontium-89 decay factor,
V = volume of sample analyzed, in liters,
i = yttrium-90 ingrowth factor for strontium-90 by yttrium-90 determination, and
2.22 = conversion factor from dpm/pCi.

Error associated with the results of the analysis should also be reported. See Section 10 for error and statistical calculations, for yttrium-90 decay and ingrowth factors, and for strontium-89 decay factors.

10. Calculation Factors

10.1 Error and Statistical Calculations - Because of the random nature of radioactivity disintegrations, there is an error associated with any measured count of these disintegrations. The variability of any measurement is indicated by the standard deviation. The standard deviation in the counting rate, (R). is determined by the following equation:

$$\sigma(R) = \left[\frac{R_o}{t_1} + \frac{B}{t_2}\right]^{1/2}$$

where: R_o = gross count rate
t_1 = counting time for the gross count
B = background count rate
t_2 = counting time for the background count

Let $\sigma(R_1) = D_1$ = standard deviation for the count of total strontium-89 and strontium-90 (from $SrCO_3$ precipitate, which includes the unwanted ingrown yttrium-90).

Let $\sigma(R_2) = D_2$ = standard deviation for the yttrium-90 count for strontium-90 determination

The counting errors, E, for a given sample for the strontium-89 and strontium-90 determinations expressed in pCi/liter are shown as follows:

$$\text{For } ^{90}Sr,\ E = \frac{1.96\ D_2 \times 1000}{2.22 x abefiV}$$

$$\text{For } ^{89}Sr,\ E = \frac{1.96 \times 1000}{2.22 \times adV}\left[(D_1)^2 + \left(\frac{c + e \times g}{befi}\right)^2 (D_2)^2\right]^{1/2}$$

where:

1.96 = 95% confidence factor
1000 = ml/liter
2.22 = conversion factor from disintegrations/minute to picocuries
a = strontium recovery factor
b = yttrium recovery factor
c = strontium-90 counting efficiency
d = strontium-89 counting efficiency
e = yttrium-90 counting efficiency
f = yttrium-90 decay factor
g = ingrowth factor for unwanted yttrium-90 in total radiostrontium count
i = ingrowth factor for yttrium-90 for strontium-90 determination

These were derived by applying propagation of error theory to the expressions in Section 9.3.

The standard deviations of a number of experimental analyses or observations is determined by:

$$S = \left[\sum_{i=1}^{n} (x_i - \bar{x})^2 / n - 1 \right]^{1/2}$$

where:

x_i = activity (pCi/liter) of a given sample
$\bar{x}$ = mean activity (pCi/liter) of a series of analyses
n = the number of replicate analyses

10.2 Yttrium-90 Decay and Ingrowth Factors (0-71 Hours)

t(hr)	$e^{-\lambda t}$	$1-e^{-\lambda t}$	t(hr)	$e^{-\lambda t}$	$1-e^{-\lambda t}$	t(hr)	$e^{-\lambda t}$	$1-e^{-\lambda t}$
0.0	1.0000	.0000	22.5	.7843	.2157	45.0	.6151	.3849
0.5	.9940	.0054	23.0	.7801	.2199	45.5	.6118	.3882
1.0	.9893	.0107	23.5	.7759	.2241	46.0	.6085	.3915
1.5	.9839	.0161	24.0	.7717	.2283	46.5	.6053	.3947
2.0	.9786	.0214	24.5	.7676	.2324	47.0	.6020	.3980
2.5	.9734	.0266	25.0	.7634	.2366	47.5	.5988	.4012
3.0	.9681	.0319	25.5	.7593	.2407	48.0	.5955	.4045
3.5	.9629	.0371	26.0	.7552	.2448	48.5	.5923	.4077
4.0	.9577	.0423	26.5	.7512	.2488	49.0	.5891	.4109
4.5	.9526	.0474	27.0	.7471	.2529	49.5	.5860	.4140
5.0	.9474	.0526	27.5	.7431	.2569	50.0	.5828	.4172
5.5	.9423	.0577	28.0	.7391	.2609	50.5	.5797	.4203
6.0	.9373	.0627	28.5	.7351	.2549	51.0	.5766	.4234
6.5	.9322	.0678	29.0	.7311	.2689	51.5	.5735	.4265
7.0	.9272	.0728	29.5	.7272	.2728	52.0	.5704	.4296
7.5	.9222	.0778	30.0	.7233	.2767	52.5	.5673	.4327
8.0	.9172	.0828	30.5	.7194	.2806	53.0	.5642	.4358
8.5	.9123	.0877	31.0	.7155	.2845	53.5	.5612	.4388
9.0	.9074	.0926	31.5	.7117	.2883	54.0	.5582	.4418
9.5	.9025	.0975	32.0	.7078	.2922	54.5	.5552	.4448
10.0	.8976	.1024	32.5	.7040	.2960	55.0	.5522	.4478
10.5	.8928	.1072	33.0	.7002	.2998	55.5	.5492	.4508
11.0	.8880	.1120	33.5	.6965	.3035	56.0	.5462	.4538
11.5	.8832	.1168	34.0	.6927	.3073	56.5	.5433	.4567
12.0	.8785	.1215	34.5	.6890	.3110	57.0	.5404	.4596
12.5	.8737	.1263	35.0	.6853	.3147	57.5	.5375	.4625
13.0	.8690	.1310	35.5	.6816	.3184	58.0	.5346	.4654
13.5	.8644	.1356	36.0	.6779	.3221	58.5	.5317	.4683
14.0	.8597	.1403	36.5	.6743	.3257	59.0	.5288	.4712
14.5	.8551	.1449	37.0	.6706	.3294	59.5	.5260	.4740
15.0	.8505	.1495	37.5	.6670	.3330	60.0	.5232	.4768
15.5	.8459	.1541	38.0	.6634	.3366	60.5	.5203	.4797
16.0	.8413	.1587	38.5	.6599	.3401	61.0	.5175	.4825
16.5	.8468	.1632	39.0	.6563	.3437	61.5	.5148	.4852
17.0	.8323	.1677	39.5	.5428	.3472	62.0	.5092	.4880
17.5	.8278	.1722	40.0	.6493	.3507	62.5	.5092	.4908
18.0	.8234	.1766	40.5	.6458	.3542	63.0	.5065	.4935
18.5	.8189	.1811	41.0	.6423	.3577	64.0	.5010	.4990
19.0	.8145	.1855	41.5	.6388	.3612	65.0	.4957	.5043
19.5	.8101	.1899	42.0	.6354	.3646	66.0	.4903	.5097
20.0	.8058	.1942	42.5	.6320	.3680	67.0	.4851	.5149
20.5	.8014	.1986	43.0	.6286	.3714	68.0	.4799	.5201
21.0	.7971	.2029	43.5	.6252	.3748	69.0	.4747	.5253
21.5	.7928	.2072	44.0	.6219	.3781	70.0	.4696	.5304
22.0	.7885	.2115	44.5	.6185	.3815	71.0	.4646	.5354

10.3 Yttrium-90 Ingrowth Factors (0-27 days)

t(days)	$1-e^{-\lambda t}$	t(days)	$1-e^{-\lambda t}$	t(days)	$1-e^{-\lambda t}$
0.00	.0000	9.00	.9029	18.00	.9906
0.25	.0627	9.25	.9090	18.25	.9912
0.50	.1215	9.50	.9147	18.50	.9917
0.75	.1766	9.75	.9201	18.75	.9922
1.00	.2283	10.00	.9251	19.00	.9927
1.25	.2767	10.25	.9298	19.25	.9932
1.50	.3221	10.50	.9342	19.50	.9936
1.75	.3646	10.75	.9384	19.75	.9940
2.00	.4045	11.00	.9422	20.00	.9944
2.25	.4418	11.25	.9458	20.25	.9948
2.50	.4768	11.50	.9492	20.50	.9951
2.75	.5097	11.75	.9524	20.75	.9954
3.00	.5404	12.00	.9554	21.00	.9957
3.25	.5692	12.25	.9582	21.25	.9959
3.50	.5963	12.50	.9608	21.50	.9962
3.75	.6216	12.75	.9633	21.75	.9964
4.00	.6453	13.00	.9656	22.00	.9967
4.25	.6676	13.25	.9678	22.25	.9969
4.50	.6884	13.50	.9697	22.50	.9971
4.75	.7080	13.75	.9716	22.75	.9973
5.00	.7263	14.00	.9734	23.00	.9974
5.25	.7435	14.25	.9751	23.25	.9976
5.50	.7596	14.50	.9766	23.50	.9977
5.75	.7746	14.75	.9781	23.75	.9979
6.00	.7888	15.00	.9795	24.00	.9980
6.25	.8020	15.25	.9808	24.25	.9981
6.50	.8145	15.50	.9820	24.50	.9982
6.75	.8261	15.75	.9831	24.75	.9984
7.00	.8370	16.00	.9842	25.00	.9985
7.25	.8472	16.25	.9852	25.25	.9986
7.50	.8568	16.50	.9861	25.50	.9987
7.75	.8658	16.75	.9870	25.75	.9987
8.00	.8742	17.00	.9878	26.00	.9988
8.25	.8820	17.25	.9886	26.25	.9989
8.50	.8896	17.50	.9893	26.50	.9990
8.75	.8864	17.75	.9900	26.75	.9990
				27.00	.9991

10.4 Strontium-89 Decay Factors (0-59.5 days) (t 1/2 = 51 days)

t(days)	$e^{-\lambda t}$	t(days)	$e^{-\lambda t}$	t(days)	$e^{-\lambda t}$
0.0	1.0000	20.0	.7620	40.0	.5808
0.5	.9932	20.5	.7569	40.5	.5769
1.0	.9865	21.0	.7518	41.0	.5730
1.5	.9798	21.5	.7568	41.5	.5690
2.0	.9732	22.0	.7416	42.0	.5652
2.5	.9668	22.5	.7366	42.5	.5613
3.0	.9601	23.0	.7317	43.0	.5575
3.5	.9536	23.5	.7267	43.5	.5539
4.0	.9471	24.0	.7218	44.0	.5500
4.5	.9407	24.5	.7169	44.5	.5462
5.0	.9344	25.0	.7120	45.0	.5427
5.5	.9280	25.5	.7072	45.5	.5380
6.0	.9217	26.0	.7023	46.0	.5352
6.5	.9155	26.5	.6977	46.5	.5318
7.0	.9093	27.0	.6930	47.0	.5280
7.5	.9031	27.5	.6882	47.5	.5245
8.0	.8970	28.0	.6836	48.0	.5210
8.5	.8909	28.5	.6790	48.5	.5175
9.0	.8849	29.0	.6742	49.0	.5140
9.5	.8789	29.5	.6699	49.5	.5105
10.0	.8729	30.0	.6651	50.0	.5070
10.5	.8670	30.5	.6608	50.5	.5035
11.0	.8612	31.0	.6562	51.0	.5000
11.5	.8553	31.5	.6519	51.5	.4967
12.0	.8495	32.0	.6473	52.0	.4933
12.5	.8438	32.5	.6430	52.5	.4900
13.0	.8381	33.0	.6388	53.0	.4868
13.5	.8324	33.5	.6342	53.5	.4834
14.0	.8268	34.0	.6300	54.0	.4801
14.5	.8212	34.5	.6259	54.5	.4769
15.0	.8156	35.0	.6215	55.0	.4734
15.5	.8101	35.5	.6172	55.5	.4702
16.0	.8046	36.0	.6131	56.0	.4671
16.5	.7991	36.5	.6090	56.5	.4640
17.0	.7938	37.0	.6050	57.0	.4608
17.5	.7883	37.5	.6009	57.5	.4578
18.0	.7881	38.0	.5968	58.0	.4547
18.5	.7778	38.5	.5928	58.5	.4513
19.0	.7725	39.0	.5888	59.0	.4484
19.5	.7672	39.5	.5848	59.5	.4454

11. Precision and Accuracy

11.1 In a single operator test of the method, two sets of five water samples containing known amounts of strontium-89, strontium-90, were analyzed for those radionuclides. The average recovery of added strontium-90 was 95 and 94 percent for the two sets of samples at a precision of 3 and 5 percent at the 95 percent confidence level.

11.2 In a collaborative test of the method with 13 laboratories participating, three samples containing known amounts of strontium-89 and strontium-90 were analyzed (Samples A, B and C).

11.3 The data of two laboratories for all three samples for strontium-90 were rejected because their scores in the ranked results of the laboratory averages were outside the acceptable range for 13 laboratories and 3 samples.

11.4 The coefficients of variation for the three samples ranged from 11.3% for 1000 pCi/l concentrations to 57% for 10 pCi/l concentrations.

11.5 The coefficients of variation for the combined within-laboratory precision for strontium-90 in the three samples ranged from 13.6% for 1000 pCi/l concentrations to 23% for 10 pCi/l concentrations.

11.6 The coefficients of variation for the precision of the method between laboratories for strontium-89 in the three samples ranged from 20% for 1000 pCi/l concentrations to 43% for 10 pCi/l concentrations.

11.7 The coefficients of variation for the precision of the method between laboratories for strontium-90 in the samples ranged from 15% for 1000 pCi/l concentrations to 44% for 10 pCi/l concentrations.

11.8 The coefficients of variation for the total error between laboratories based on a single analysis for strontium-89 in the three samples ranged from 23% for 1000 pCi/l concentrations to 71% for 10 pCi/l concentrations.

11.9 The coefficients of variation for the total error between laboratories based on a single analysis for strontium-90 in the three samples ranged from 17% for 1000 pCi/l concentrations to 46% for 10 pCi/l concentrations.

11.10 In the statistical test to detect method bias, no significant bias was shown in the analysis of the three samples for strontium-89. In the analysis of the three samples for strontium-90, sample C (1000 pCi/l concentration) showed a low bias but not seriously.

11.11 The strontium-89 analysis of samples A, B, and C deviated from the known values by the factor 1.49, 1.01, and 1.03, respectively. The strontium-90 analysis of samples A, B, and C deviated from the known values by the factors 1.00, 0.899, and 0.820, respectively.

Bibliography

1. EPA Drinking Water Regulations, Federal Register, Vol. 41, No. 133, Friday July 9, 1976, Part 141.

2. American Public Health Association. Standard Methods for the Examination of Water and Wastewater, 13th Edition, Washington, D.C. 1971.

3. American Society for Testing and Materials. 1976 Annual Book of ASTM Standards, Part 31, Philadelphia, PA.

4. Dixon, W.J., and F. J. Massey, Jr. Introduction to Statistical Analysis, McGraw-Hill, 1969.

5. HASL-300, Health and Safety Laboratory, ERD, 376 Hudson Street, New York, New York 10014.

6. Steiner, E.H., 1975. Planning and Analysis for Results of Collaborative Tests, Statistical Manual of the AOAC, Association of Official Analytical Chemists, Washington, D. C.

7. Youden, W. J. 1969. Precision Measurements and Calibration. H. H. Ku, editor. National Bureau of Standards, Special Publication 300, Vol. 1.

8. Youden, W. J. 1975. Statistical Techniques for Collaborative Tests. Statistical Manual of the AOAC. Association of Official Analytical Chemists, Washington, D. C.

9. Douglas, G. S., ed. Radioassay Procedures for Environmental Samples, Environmental Health Series, USDHEW Rept. 999-RH-27, National Center for Radiological Health, Rockville, Md. 10852 (Jan. 1967).

10. Hahn, R.B., and C. P. Straub. "Determination of Radioactive Strontium and Barium in Water." J. Am. Water Works Assoc. 47 (4) 335-340 (April 1955)

11. Goldin, A. S., R. J. Velten and G. W. Frishkorn, "Determination of Radioactive Strontium," Anal. Chem. 31, 1490 (1959).

SECTION 10
TRITIUM IN DRINKING WATER
METHOD 906.0

1. Scope and Application

1.1 This method covers the measurement of tritium (as T_2O or HTO) in a sample of drinking water by liquid scintillation spectrometry. This technique assures the identification of tritium in drinking water at a concentration fifty-fold lower than promulgated in the Safe Drinking Water Act, PL 93-523.

1.2 The maximum contaminant level for tritium in drinking water as given in the National Interim Primary Drinking Water Regulations (NIPDWR) is 20,000 pCi/l. The NIPDWR list a required detection limit for tritium in drinking water of 1000 pCi/l or 1 pCi/ml, meaning that drinking water supplies, where required, should be monitored for tritium at a sensitivity of 1 pCi/ml. In Appendix C, the use of equation (3) will determine the necessary counting time required to meet the sensitivity for drinking water monitoring.

1.3 By counting standard tritium and background samples at the same time as the prepared drinking water samples, the results and the behavior of the liquid scintillation spectrometer can be routinely monitored.

2. Summary of Method

2.1 A 100 ml aliquot of a drinking water sample is treated with a small amount of sodium hydroxide and potassium permanganate, then is distilled, and a specified fraction of the distillate is collected for tritium analysis. The alkaline treatment prevents other radionuclides such as radioiodine and radiocarbon from distilling over with the tritium. Some drinking water supplies will contain trace quantities of organic compounds (especially surface water sources that contain fish and other life). The permanganate treatment oxidizes trace organics in the sample aliquot which could distill over and cause quenching interferences. A middle fraction of the distillate is collected for tritium analysis because the early and late fractions are more apt to contain interfering materials for the liquid scintillation counting process.

2.2 The collected distillate fraction is thoroughly mixed and a portion is mixed with liquid scintillator solution, and after dark

adapting, is counted in the liquid scintillation counting system for tritium beta particle activity.

2.3 The scintillator solution, mixed with the radioactive sample, is excited by beta particles and emits light pulses by a molecular de-excitation process. The number of pulses per unit time is proportional to the quantity of activity present. Multiple solutes are used in the scintillator to provide the best combination of wavelength and pulse height for this application. The pulses are detected by two photomultiplier tubes connected in coincidence and converted to electric signals. The amplified pulses are recorded and the count rate is measured. The efficiency of the system can be determined by use of prepared tritiated water standards having the same density and color as the sample.

3. Sample Handling and Preservation

3.1 The drinking water sample should be collected in its natural state, and should not be acidified. Since tritium in drinking water is very much apt to be in the form of T_2O or HTO there is no need for special handling or preservation.

4. Interferences

4.1 Tritium in background water is an interference. Slightly elevated levels are present in surface waters so deep well sources for background water should be used.

4.2 All fluors should be checked for excitation under lighting conditions being used and if necessary they should be exposed only to red light. Dioxane-base scintillators exposed to fluorescent lighting should be dark-adapted for 24 hours. Toluene-or xylene-base scintillators exposed to fluorescent lighting should be dark-adapted for a minimum of 1 hour.

4.3 The use of plastic vials may cause build-up of static charge and give erratic results.

5. Apparatus - See Appendix D for details and specifications.

5.1 Coincidence-type liquid scintillation spectrometer.

5.2 Liquid scintillation vials: Low-potassium glass is recommended. Polyethylene vials may be used when dioxane liquid scintillator solution is used.

5.3 Distillation apparatus: For aqueous distillation: 250-ml and 1000-ml round bottom pyrex flasks, connecting side arm adapter (such as Corning part #9060), condenser, graduated cylinder, boiling chips, and heating mantle.

6. Reagents

6.1 Reagents for distillation treatment: sodium hydroxide pellets and potassium permanganate. (ACS - reagent grade)

6.2 Background water with tritium activity below the minimum detectable activity (most deep well waters are low in tritium content).

6.3 Scintillator solutions:

6.3.1 Solution G liquid scintillator solution: Dissolve 18g scintillation-grade PPO (2,5-diphenyloxazole) and 3.6g scintillation-grade BIS-MSB p-bis(o-methylstyryl)benzene in 2 liters of spectroquality p-xylene. Add 1 liter Triton N-101 detergent (Rohm & Haas) to the p-xylene scintillator solution. Dissolve 50g SXS (sodium xylene sulfonate) in 100 ml distilled water and add this solution to the p-xylene scintillator-Triton solution. Mix thoroughly. Store the solution in a dark (amber) bottle. The organic solvent evaporates slowly through the wall of the polyethylene vials. For this reason counting samples should be completed within 3 days after preparation.

6.3.2 Detergent-type liquid scintillator solutions are available as commercial preparations. They are also prepared with aromatic hydrocarbon solvents and should therefore, when used with plastic vials, be counted within 3 days for the reason stated above. (See Representative Sources of Laboratory Supplies, Appendix E)

6.3.3 Dioxane liquid scintillator solution: Dissolve 4g scintillation-grade PPO (2,5-diphenyloxazole), 0.05g scintillation-grade POPOP 1,4-bis(5-phenyloxazolyl-2-yl) benzene , and 120g naphthalene in 1 liter of spectroquality 1,4-dioxane. Store the solution in a dark (amber) bottle. This solution can be used with glass or polyethylene vials.

7. Calibrations

7.1 Determination of Recovery and Counting Efficiency Factors - (See calculations, Sec. 9.2 and 9.3)

7.1.1 Into a 1-liter volumetric flask, pipette a tritium standard solution containing approximately 1000 disintegrations per minute (dpm) per ml and dilute to volume using low level tritium background raw water (undistilled) and standard tritium activity. Label this solution "Raw Water Tritium Standard Solution." For tritium background determinations, distill approximately 600 ml of water, obtained from the same raw water source as above (without tritium activity added). Using the distillate and standard tritium activity,

prepare a tritium standard solution in a 500-ml volumetric flask containing the same specific activity as the "Raw Water Tritium Standard Solution." Label this solution "Distilled Water Tritium Standard Solution."

7.1.2 Aqueous permanganate distillation:
To a 100-ml aliquot of the "Raw Water Tritium Standard Solution" in a 250-ml distillation flask, add 0.5g sodium hydroxide, 0.1g potassium permanganate, and a boiling chip. Proceed according to the procedure described in section 8.1. Discard the first 10 ml and collect 50 ml of the distillate for analysis. Mix well. Repeat the distillation with two more 100-ml aliquots for triplicate analyses.

7.1.3 For liquid scintillation counting:
Prepare 3 aliquots of the "Raw Water Tritium Standard Solution" distillate (from step 7.1.2), 3 aliquots of the "Distilled Water Tritium Standard Solution;" and 3 aliquots of the distilled raw water (for background). Mix 4 ml water with 16 ml of the dioxane scintillator solution or 8 ml water with 12 ml of a detergent-type scintillator solution in a liquid scintillator vial (glass vials should be used for detergent-type scintillator solutions). Shake well and dark-adapt the vials overnight. Count each vial in a liquid scintillation counter long enough to meet the required detection limit (1 pCi/ml) or longer (see Appendix C for calculating required counting time).

8. Procedure

8.1 Add 0.5g sodium hydroxide and 0.1g potassium permanganate to a 100-ml aliquot of the sample in a 250-ml distillation flask. Add a boiling chip to the flask. Connect a side arm adapter and a condenser to the outlet of the flask, and insert a graduated cylinder at the outlet of the condenser (Fig. 5). Heat the sample to boiling to distill, and discard the first 10 ml of distillate as a separate fraction. (It is important that the first 10-ml fraction for samples and standards alike be discarded, since there is a gradient in the tritium concentration of the distillate). Collect the next 50-ml of distillate for tritium analysis and mix thoroughly.

8.2 Mix 4 ml of the distillate with 16 ml of the dioxane liquid scintillator or 8 ml of the distillate with 12-ml of a detergent-type scintillator solution in a liquid scintillation vial.

8.3 Prepare background and standard tritium water solutions for counting, using the same amount of water and the same scintillator as used in the preparation of samples. Use low tritium background distilled water for these preparations (distillate of most deep well water sources is acceptable, but each source should be checked for tritium activity before using).

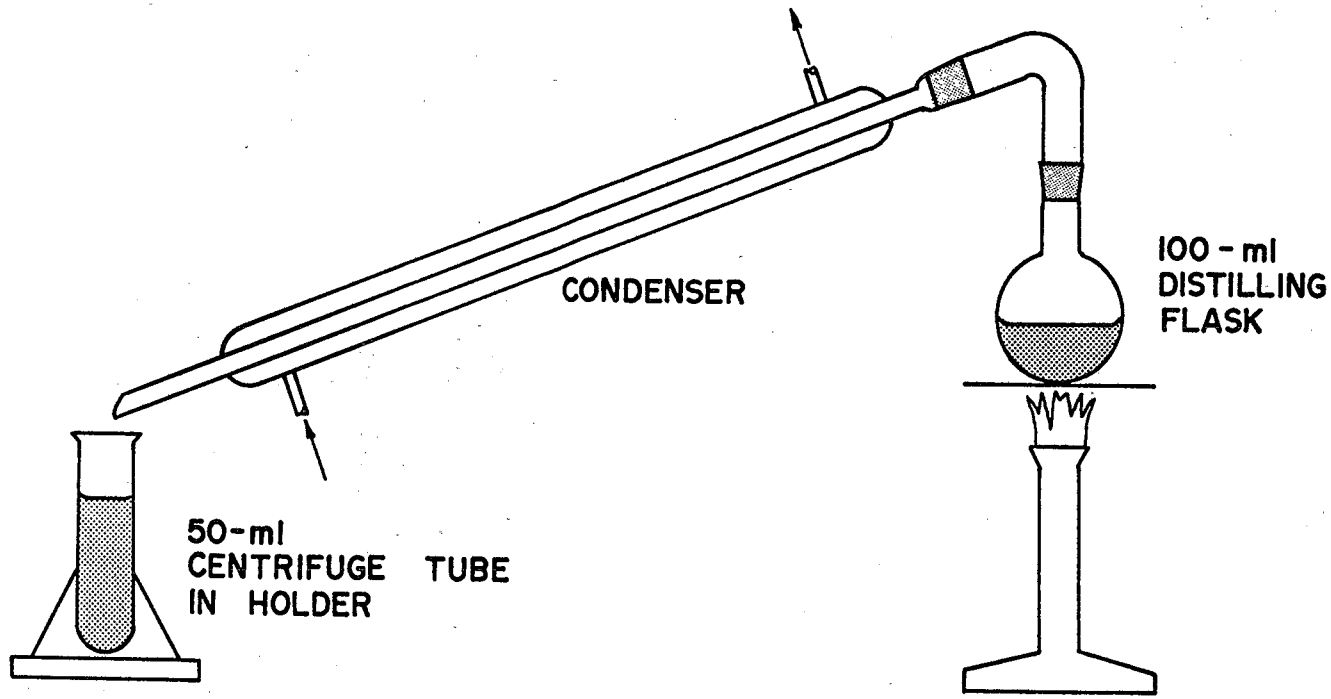

Figure 5. Distillation apparatus for tritium analysis

8.4 Dark-adapt all samples, backgrounds, and standards. Count the samples, backgrounds, and standards at least long enough to meet the required detection limit (1 pCi/ml) for the sample (see Appendix C for calculating required time).

Note: In normal counting operation, tritium is counted with a window setting where the figure of merit is at maximum.

$$\text{Figure of Merit} = \frac{E^2}{B} = \frac{(\text{Efficiency})^2}{(\text{Background})}$$

9. Calculations

9.1 Calculate the tritium concentration, A, in picocuries per liter as follows:

$$A = \frac{(C - B) \times 1000}{2.22 \times E \times V \times F}$$

where:

C = sample count rate, cpm,
B = background count rate, cpm,
E = counting efficiency, as determined in Sec. 9.2,
V = volume of the sample aliquot in ml,
F = recovery factor, as determined in Sec. 9.3
2.22 = conversion factor for dpm/pCi.

9.2 Determine the counting efficiency, E, as follows:

$$E = \frac{D - B}{G}$$

where:

D = distilled water standard count rate, cpm,
B = background count rate, cpm, and
G = activity of distilled water standrd (dpm)

9.3 Calculate the recovery correction factor, F, as follows:

$$F = \frac{L - B}{E \times M}$$

where:

L = raw water standard distillate count rate, cpm,
B = background count rate, cpm,
E - counting efficiency, as determined in Sec. 9.2, and
M = activity of raw water standard (before distillation), dpm.

10. Precision and Accuracy

10.1 In an interlaboratory collaborative test of the method three water samples were analyzed for tritium by 25 laboratories. The three water samples were prepared by spiking tap water with measured amounts of tritiated water of known concentrations.

10.2 The data from three laboratories for the three water samples were rejected from the statistical analysis because their scores in the ranked results of the laboratory averages were outside the acceptable range for 25 laboratories and 3 samples.

10.3 The coefficients of variation for the combined within-laboratory precision for the three samples ranged from 2.1 to 5.2 percent.

10.4 The coefficients of variation for the precision of the method between laboratories for the three samples ranged from 21.0 to 28.8 percent.

10.5 The coefficients of variation for the total error between laboratories based on a single analysis for the three samples ranged from 21.3 to 29.2 percent.

10.6 In the statistical test to detect method bias, the method showed no bias for tritium concentrations at the 7 pCi/ml level to a small bias on the low side for concentrations at the 300 pCi/ml level (average analytical value about 9 percent lower than the known value).

Bibliography

1. Standard Methods for the Examination of Water and Wastewater, 14th Edition, American Public Health Association, Washington, D.D., 1976

2. Moghissi, A.A., E.W. Bretthauer, and E.H. Compton, "Separation of Water from Biological and Environmental Samples for Tritium Analysis," Anal. Chem., 45:1565, 1973

3. EPA Drinking Water Regulations, Federal Register, Vol. 41, No. 133, Friday, July 9, 1976, Title 40, Part 141. (See Appendix B in the Reference Method for Gross Alpha and Gross Beta).

4. Chase, G.D., and J.L. Rabinowitz, Principles of Radioisotope Methodology, Burgess Publishing Co., Minneapolis, Minnesota, 1967.

5. Bush, E.T., "General applicability of the Channels Ratio Method of Measuring Liquid Scintillation Counting Efficiencies," Anal. Chem., 35:1024, 1963

6. 1978 Annual Book of ASTM Standards, Part 31, American Society for Testing and Materials, Philadelphia, Pennsylvania.

7. Youden, W.J., 1975 "Statistical Techniques for Collaborative Tests," Statistical Manual of the AOAC, Association of Official Analytical Chemists, Washington, D.C.

8. Steiner, E.H. 1975. "Planning and Analysis of Results of Collaborative Tests," Statistical Manual of the AOAC, Association of Official Analytical Chemists, Washington, D. C.

9. Youden, W. J. 1969. Precision Measurements and Calibration, H.H. Ku, Editor. National Bureau of Standards, Special Publication 300, Vol. 1.

10. Dixon, W.J. and F.J. Massey, Jr. Introduction to Statistical Analysis, McGraw-Hill, 1969.

11. Precision, Measurements and Calibration, Statistical Concepts and Procedures, U.S. Department of Commerce, NBS, Spec. Pub. 300, 1:349-354.

12. Friedlander, G., J.W. Kennedy, and J. Miller, Nuclear and Radiochemistry, John Wiley and Sons, Inc., New York, New York, 1964.

13. Sodd, V.J., and K.L. Scholz, "Analysis of Tritium in Water; A Collaborative Study," J. Assoc. Offic. Anal. Chem. 52:1, 1969.

SECTION 11
ACTINIDE ELEMENTS IN DRINKING WATER - THORIUM, URANIUM, NEPTUNIUM, PLUTONIUM, AMERICIUM AND CURIUM
METHOD 907.0

1. Scope and Application

   1.1 This method covers the determination of soluble actinide elements by means of coprecipitation, various chemical separation techniques and alpha counting. These elements are coprecipitated on ferric hydroxide, chemically separated by coprecipitation on bismuth phosphate and subsequent solvent extraction, and prepared for alpha counting by coprecipitation on lanthanum fluoride. Alpha counting can be made by use of an internal proportional counter or, scintillation counting using zinc sulfide discs. Suspended matter when present as in the case of raw water supplies, is removed by filtration prior to analyses.

   1.2 Alpha counting techniques such as internal proportional counting or zinc sulfide scintillation counting preclude the use of internal tracer yield measurement. This method has been so designed that chemical yield as determined by tracer measurements has exceeded 85%. Application of this yield factor would result in a maximum 15% bias in the accuracy of the measurement, providing an overestimated value which is conservative when compared to a maximum concentration level. Good laboratory techniques must be followed to consistently achieve these high recoveries.

2. Summary of Method

   2.1 The actinide elements are concentrated by coprecipitation on ferric hydroxide. The ferric hydroxide is dissolved and thorium, neptunium, plutonium, americium and curium, are coprecipitated on bismuth phosphate, leaving uranium in solution for subsequent solvent extraction using trioctylphosphine oxide (TOPO). The bismuth phosphate is dissolved in strong hydrochloric acid and plutonium and neptunium are extracted in tri-isooctylamine (TIOA). The thorium is separated from americium and curium by extraction with TOPO. All separated and purified elements are coprecipitated on lanthanum fluoride and alpha counted. Figure 6 illustrates the general procedural separations.

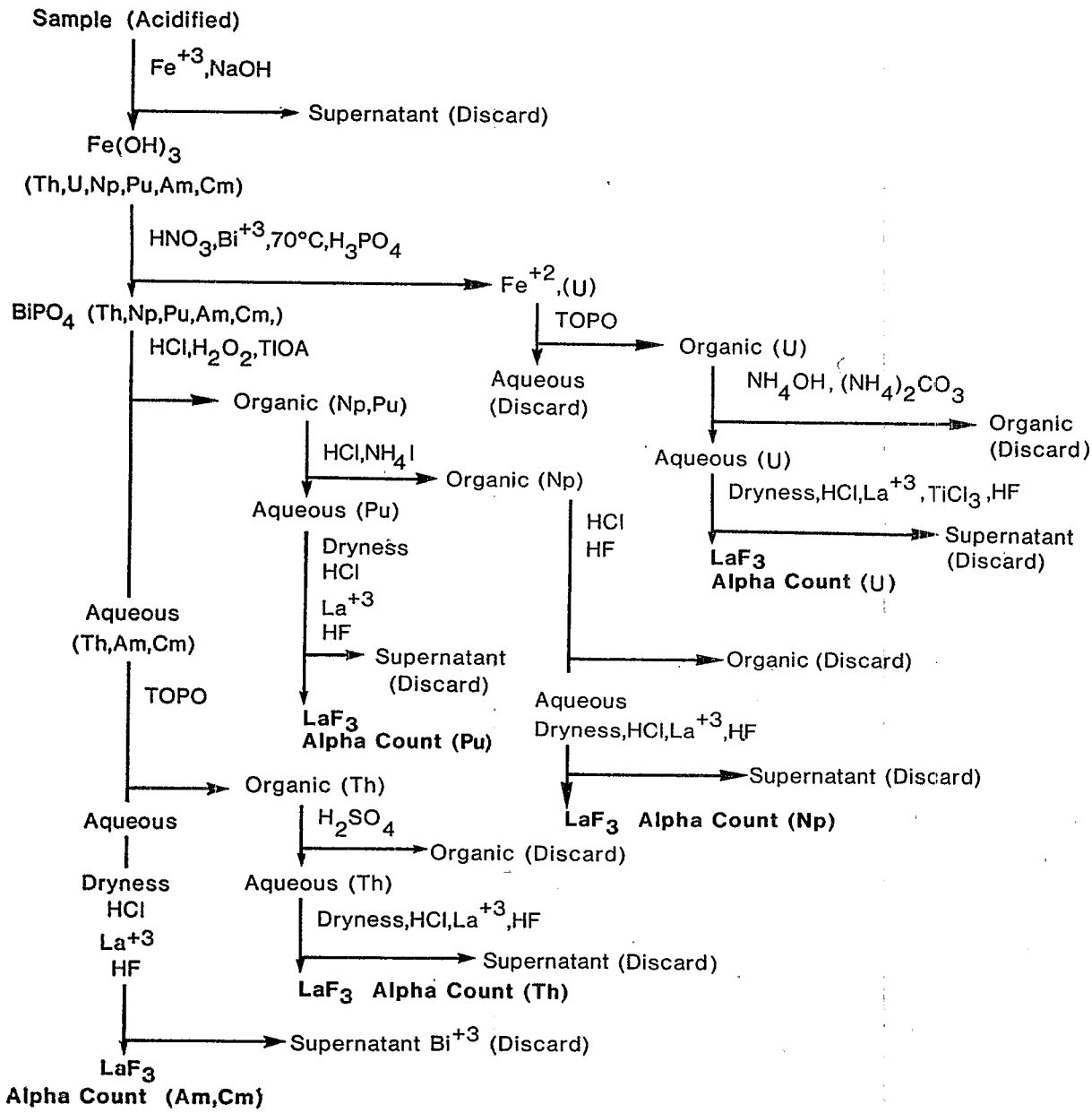

Figure 6. Generalized chemical procedure (for actinide elements)

3. Significance and Use

3.1 The National Interim Primary Drinking Water Regulation has established a Maximum Contaminant Level (MCL) equivalent to an annual dose of 4 mrem per year. This dose equivalent applies only to man-made beta and photon emitters. There are no specific maximum contaminant levels for alpha emitters other than radium-226. However, in the absence of specific MCL for each of the actinides, the limit of 15 pCi/l for gross alpha activity may be inferred.

Maximum Concentration Levels (MCL)

Element	Isotope	Critical Organ	MPC,µCi/cc	MCL,pCi/l
Neptunium	237	Bone	$3x10^{-5}$	15
Plutonium	238	Bone	$5x10^{-5}$	15
	239	Bone	$5x10^{-5}$	15
	240	Bone	$5x10^{-5}$	15
Americium	241	Kidney	$4x10^{-5}$	15
Curium	242	GI Tract	$2x10^{-4}$	15
	243	Bone	$5x10^{-5}$	15
	244	Bone	$7x10^{-5}$	15

3.2 This method was developed for the sequential analysis of these elements from a single sample. The method is responsive to the requirements of drinking water monitoring as well as being time responsive and economical.

4. Interferences

4.1 Carbonate and bicarbonate ions interfere in the complete coprecipitation of uranium on ferric hydroxide by forming soluble uranium complexes. The sample must be boiled or purged with nitrogen gas under acid conditions to expel carbon dioxide gas from solution.

4.2 Ammonium ions interfere in the complete coprecipitation of neptunium on ferric hydroxide. The use of sodium hydroxide to adjust the alkalinity results in complete recovery of neptunium. A freshly prepared solution of sodium hydroxide is recommended as carbon dioxide is easily absorbed from the air, and will interfere in the uranium analysis.

4.3 Chelating agents, whether present from natural sources or from industrial processes, will interfere to varying extent by totally or partially complexing these actinide elements. When chelating agents are known to be present in drinking water supplies, the

analyst should resort to alternate methods such as coprecipitation from acid solutions.

5. Apparatus - See Appendix D for Details and Specifications

5.1 Alpha Particle Counter, consisting of either a proportional detector or a scintillation detector.

5.2 Stainless steel counting planchets

5.3 Plastic ring and disc mounts.

5.4 Filtering Apparatus

5.4.1 Millipore Filter for 47 mm and 25 mm diameter filters.

5.5 Alpha Sensitive Phosphors

5.6 Centrifuge.

5.7 Silica Columns - 2.5 cm I.D. X 20 cm. Fit one end with rubber stopper containing an 8 mm O.D. glass tube. Place a wire screen on the inside of the tube. The filtering column is composed of 3 mm paper pulp layer, 25 cm^3 of silica sand, and covering plug of glass wool. The top of the column is fitted with a rubber stopper containing an 8 mm O.D. glass tube. In usage, the column is filled with water and the top fastened to the siphon tube and the bottom to the vacuum chamber.

5.8 Glassware

6. Reagents

6.1 Purity of Reagents - Reagent grade chemicals shall be used in all tests. Unless otherwise indicated, it is intended that all reagents shall conform to the specifications of the committee on analytical reagents of the American Chemical Society. Other grades may be used provided it is first ascertained that the reagent is ofsufficiently high purity to permit its use without lessening the accuracy of the determination.

6.1.1 Purity of Water - Unless otherwise indicated, reference to water shall be understood to mean conforming to ASTM Specifications D 1193, Type III.

6.1.2 Radioactive Purity - Radioactive purity shall be such that the measured radioactivity of blank samples does not exceed 1 cpm.

6.2 Acetone, $(CH_3)_2CO$, anhydrous.

6.3 Ammonium hydroxide, 15N: NH_4OH (conc.), sp. gr. 0.9, 56.6%.

6.4 Ammonium hydroxide, 1.0N: Mix 1 volume 15N NH_4OH (conc.) with 14 volumes of water.

6.5 Ammonium hydroxide - Ammonium carbonate solution: Dissolve 1.92g $(NH_4)_2CO_3$ in 100 ml 1.0N NH_4OH. This solution is 1M in ammonium hydroxide and 0.2M in ammonium carbonate.

6.6 Ascorbic Acid, $C_6H_8O_6$: reagent grade.

6.7 Bismuth carrier, (10 mg Bi^{+3}/ml): Dissolve 5.8g $Bi(NO_3)_3.5H_2O$ in 250 ml of 0.5N HNO_3.

6.8 Ethanol, 95%: C_2H_5OH.

6.9 Ferric nitrate carrier, (25 mg Fe^{+3}/ml): Dissolve 50.4g $Fe(NO_3)_3 \cdot 9H_2O$ in 500 ml of 0.5N HNO_3.

6.10 Hydrochloric acid, 12N HCl (conc.), sp gr 1.19, 37.2%

6.11 Hydrochloric acid, 8N: Mix 2 volumes of 12N HCl (conc.) with 1 volume of water.

6.12 Hydrochloric acid - ammonium iodide solution: Dissolve 720 mg NH_4I in 100 ml 8N HCl. This solution is 8N in HCl and 0.05M in NH_4I (Prepare fresh each time).

6.13 Hydrochloric acid - hydrofluoric acid solution: Mix 8 volumes of 8N HCl with 1 volume of 0.8N HF and 7 volumes of water. This solution is 4N in HCl and 0.05N in HF. Store in plastic bottle.

6.14 Hydrofluoric acid, 29N: HF (conc.), sp. gr. 1.18, 49.0%.

6.15 Hydrofluoric acid, 0.8N: Mix 1 volume of HF (conc.), 49.0% with 35 volumes of water. Store in plastic bottle.

6.16 Hydrogen peroxide, 30%: H_2O_2, 30% assay.

6.17 Lanthanum nitrate, (1.0 mg La^{+3}/ml): Dissolve 3.11g $La(NO_3)_3.6H_2O$ in one liter of 0.1N HNO_3.

6.18 Nitric acid, 16N: HNO_3 (conc.), sp. gr. 1.42, 70.4%.

6.19 Nitric acid, 8N: Mix 1 volume of 16N HNO_3 (conc.) with 1 volume of water.

6.20 Nitric acid, 1N: Mix 1 volume of 16N HNO_3 (conc.) with 15 volumes of water.

6.21 Nitric acid, 0.25N: Mix 1 volume 1N HNO_3 with 3 volumes of water.

6.22 Nitrogen, gas. C.P.

6.23 Phenolphthalein indicator (5 g/l): Dissolve 0.5g phenolphthalein in 50 ml ethanol (95%) and dilute to 100 ml with water.

6.24 Phosphoric acid, 11N: Mix 1 volume of 44N H_3PO_4 (conc.) (sp.gr. 1.70) with 3 volumes of water.

6.25 Silica sand - granular, 80-120 mesh.

6.26 Sodium hydrogen sulfate - sulfuric acid solution: Dissolve 10g $NaHSO_4$ in 100 ml of water and then carefully add 100 ml of 36N H_2SO_4 (conc.) while stirring. This solution contains 5g $NaHSO_4$ per 100 ml of 18N H_2SO_4.

6.27 Sodium hydroxide, 6N: Dissolve 48g NaOH pellets in 125 ml of water. Cool and dilute to 200 ml with water. (Prepare fresh as NaOH will absorb CO_2 from the air and interfere with the uranium analysis).

6.28 Sodium hydroxide, 0.1N - Dissolve 4g NaOH pellets in 800 ml water in a one liter volumetric flask and dilute to volume. Standardize against potassium acid phthalate.

6.29 Sulfuric acid, 36N: H_2SO_4 (conc.), sp. gr. 1.84, 96.0%.

6.30 Sulfuric acid, 0.6N: Mix 1 volume of 36N H_2SO_4 (conc.) with 59 volumes of water.

6.31 Titanium trichloride, $TiCl_3$: 20%

6.32 Triisooctylamine (TIOA) (1+9): Mix 1 volume of TIOA with 9 volumes of xylene. Wash this reagent twice with 0.5N HNO_3 and once with water at a phase ratio of 2 volumes of TIOA and 1 volume acid and water, respectively.

6.33 Tri-octyl phosphine oxide (TOPO) (0.1M) Dissolve 19.3g TOPO in 500 ml heptane.

7. Sample Handling and Preservation - (See Sec. 3, Method 900.0)

7.1 Collect the samples in accordance with ASTM D 3370, Standard Practices for Sampling Water.

7.2 To ensure continued solubility of the sample constituents, adjust the pH of the sample to ~ 2 with 1N HNO_3.

7.3 If the sample is taken from a raw water supply, it must be filtered as soon as possible after collection to minimize adsorption of the soluble constituents onto the suspended matter, and then acidified to maintain their solubilities.

8. Procedure

8.1 Coprecipitation

8.1.1 Measure a volume of finished drinking water or filtered raw water from 1 to 15 liters into an appropriately sized container. Acidify with 16N HNO_3 (conc.) at a rate of 5 ml per liter and mix.

8.1.2 Add ferric nitrate solution at a rate of 1 ml per liter for the first 6 liters and 0.5 ml per liter thereafter, and mix.

8.1.3 Add 10 drops of the phenolphthalein indicator and if sample volume is small (< 4 liters), heat to boiling with stirring to remove carbon dioxide. If sample volume is large (> 4 liters), purge the solution with nitrogen gas for 30 minutes at a purge rate to simulate a rolling boil. (A glass fritted filter stick is recommended to disperse the gas stream).

8.1.4 Add sufficient 6N NaOH until alkaline to phenolphthalein. Continue the stirring or nitrogen gas purge for 30 minutes. Remove stirring bar or nitrogen purge system, and allow the precipitate to settle for 1 hour.

8.1.5 With gentle vacuum, siphon and filter the cleared supernate through the silica column, being careful not to disturb the precipitate.

8.1.6 Collect the settled precipitate in a 250 ml centrifuge bottle centrifuge and discard the supernate.

8.1.7 Add 100 ml 1N HNO_3 to the precipitating vessel to dissolve any remaining ferric hydroxide.

8.1.8 Pass this solution slowly through the silica column to dissolve any filtered ferric hydroxide.

8.1.9 Add this acid effluent to the 250 ml centrifuge bottle containing the bulk of the ferric hydroxide.

8.1.10 Warm to effect solution, cool, and estimate volume.

8.1.11 Transfer 1.0 ml of the solution to a 125 ml Erlenmeyer flask containing 25 ml of water and 3 drops phenolphthalein.

8.1.12 Titrate with the standardized 0.1 N NaOH solution to the phenolphathalein end point and determine the normality of the solution.

8.1.13 Dilute remaining solution with water until the acid concentration is 0.25N in HNO_3. If solution is less than

400 ml, add sufficient 0.25N HNO_3 to bring to 400 ml volume. Filter through a 47 mm 0.45 μ millipore filter to remove any silica fines. Discard filter.

8.1.14 Add 5 ml bismuth carrier, and sufficient ascorbic acid to concentration of 0.2% and mix.

8.1.15 Heat to 70°C and while stirring, add 4 ml 11N H_3PO_4.

8.1.16 Remove from heat and agitate slowly for 30 minutes. Remove stirring bar and allow to settle.

8.1.17 Filter precipitate on a 47 mm diameter Millipore filter (0.45 μ) and wash twice with 10 ml 0.25N HNO_3. Save both the filtrate and precipitate.

8.2 Uranium Analysis

8.2.1 Transfer the filtrate from Step 8.1.17 to a one-liter separatory funnel. Rinse the container with a minimum of 0.25N HNO_3, adding rinsings to the separatory funnel.

8.2.2 Increase the HNO_3 concentration to 1N by adding sufficient 8N HNO_3.

8.2.3 Add trioctylphosphine oxide solution (TOPO) equal to 1/10 the aqueous volume and extract by shaking vigorously for four minutes.

8.2.4 Allow the phases to separate for 10 minutes. Drain the aqueous phase into a beaker and the organic phase into a 125 ml separatory funnel.

8.2.5 Transfer the aqueous phase back to the one-liter separatory funnel and add TOPO solution equal to 1/20 of the aqueous volume. Extract by shaking vigorously for 4 minutes.

8.2.6 Allow the phases to separate for ten minutes. Discard the aqueous phase and transfer the organic phase into the 125 ml separatory funnel.

8.2.7 Wash the combined organic phases with 15 ml 1N HNO_3, discarding the wash solution.

8.2.8 Add 25 ml ammonium hydroxide-ammonium carbonate solution and carefully shake, relieving the evolved CO_2 gas. Shake vigorously for 2 minutes.

8.2.9 Allow the phases to separate for 10 minutes and drain the aqueous phase into a 100 ml beaker.

8.2.10 Repeat steps 8.2.8 and 8.2.9, discarding the organic phase.

8.2.11 Cover the beaker with a ribbed watch glass and evaporate to dryness over moderate heat.

8.2.12 Remove from heat and add 5 ml 16N HNO_3 and 1 ml 5% $NaHSO_4$ and slowly evaporate to dryness.

8.2.13 Place in muffle furnace and heat to 500°C to remove all organics. Cool and continue with Section 8.6.

8.3 Plutonium and Neptunium Analysis

8.3.1 Transfer the membrane filter containing the precipitate (Step 8.1.17) to a 40 ml centrifuge tube.

8.3.2 Add 20 ml 8N HCl and dissolve precipitate.

8.3.3 Add 5 drops of 30% hydrogen peroxide, and heat in a water bath until effervescence ceases, using occasional stirring.

8.3.4 Cool and transfer the solution to a 125 ml separatory funnel. Wash the centrifuge tube twice with 15 ml 8N HCl, and add the washings to the separatory funnel.

8.3.5 Add 25 ml tri-isooctylamine solution (TIOA) and shake vigorously for 2 minutes.

8.3.6 Allow the phases to separate and drain the aqueous phase into a second 125 ml separatory funnel.

8.3.7 Wash the organic phase by shaking with 10 ml 8N HCl.

8.3.8 Allow the phases to separate and combine the wash into the second separatory funnel. Retain this aqueous phase for further analyses. (Section 8.4)

8.3.9 Add 10 ml hydrochloric acid - ammonium iodide solution to the organic phase and shake for 2 minutes.

8.3.10 Allow the phases to separate and drain the aqueous phase into a 30 ml beaker.

8.3.11 Repeat steps 8.3.9 and 8.3.10.

8.3.12 Add 1 ml of the acidified $NaHSO_4$ solution and evaporate the combined aqueous solutions to dryness. Place in muffle furnace and heat to 500°C to remove organics. Save for plutonium mounting and counting. (Section 8.6.)

8.3.13 Add 10 ml of the hydrochloric acid - hydrofluoric acid solution to the organic phase and shake for 2 minutes.

8.3.14 Allow the phases to separate and drain the aqueous phase into a 30 ml beaker.

8.3.15 Repeat steps 8.3.13 and 8.3.14.

8.3.16 Add 1 ml of the acidified $NaHSO_4$ solution and evaporate the combined aqueous solutions to dryness. Place in muffle furnace and heat to 500°C to remove organics. Save for neptunium mounting and counting. (Section 8.6.)

8.4 Thorium, Americium and Curium Analyses

8.4.1 To the aqueous phase resulting from step 8.3.8, add 20 ml TOPO and shake for 3 minutes.

8.4.2 Allow the phases to separate and drain aqueous phase into a 125 ml separatory funnel.

8.4.3 Wash the organic phase by shaking with 10 ml 8N HCl, adding the wash to the 125 ml separatory funnel. Save the aqueous phase for further analyses. (Section 8.5)

8.4.4 Add 20 ml 0.6N H_2SO_4 to the organic phase and shake for 2 minutes.

8.4.5 Allow the phases to separate and drain the aqueous phase into a 50 ml beaker.

8.4.6 Repeat steps 8.4.4 and 8.4.5 and discard organic phase.

8.4.7 Add 1 ml of the acidified $NaHSO_4$ solution and evaporate combined acid extracts to dryness. Place in muffle furnace and heat to 500°C to remove organics. Save for sample mounting and counting. (Section 8.6).

8.5 Americium and Curium

8.5.1 To the solution remaining from step 8.4.3, add 20 ml heptane.

8.5.2 Extract by shaking for 1 minute and allow the phases to separate.

8.5.3 Drain the aqueous phase into a 100 ml beaker.

8.5.4 Wash the organic phase by shaking with 10 ml water.

8.5.5 Combine the water wash into the 100 ml beaker. Discard the organic layer.

8.5.6 Evaporate the contents of the 100 ml beaker to dryness.

8.5.7 Place beaker in a 500°C muffle furnace for one hour.

8.5.8 Remove from furnace, cool and save for sample preparation and counting. (Section 8.6.)

8.6 Sample Mounting (Lanthanum fluoride coprecipitation)

8.6.1 To all separated and purified fractions remaining from steps 8.2.13, 8.3.12, 8.3.16, 8.4.7, and 8.5.8, add 1 ml 12N HCl (conc.).

8.6.2 Dilute to 10 ml and add 1.0 ml lanthanum carrier solution and for uranium analyses only, add 0.2 ml 20% $TiCl_3$.

8.6.3 Add 0.5 ml HF (conc.), stir well and allow to stand for 30 minutes.

8.6.4 Filter through a 25 mm diameter millipore filter (0.2μ pore size).

8.6.5 Wash one time each with 10 ml portions of water and ethanol.

8.6.6 Prepare for sample counting. (Section 8.7.)

8.7 Sample Counting

8.7.1 Internal proportional counting or scintillation counting as described in Sections 5.1.1 and 5.1.2.

8.7.1.1 Transfer the nucleopore filter to the center of a stainless steel disc of appropriate diameter, previously treated with a thin coating of rubber cement and containing one drop each of acetone and ethanol.

8.7.1.2 Allow the excess acetone and ethanol to evaporate.

8.7.1.3 Dry and alpha count.

8.7.2 Scintillation counting assembly as described in Section 5.1.4.

8.7.2.1 Carefully center the nucleopore filter on a plastic disc, lightly coated with rubber cement.

8.7.2.2 Cover with an alpha sensitive phosphor disc by placing the sensitized side in direct contact with the sample filter.

8.7.2.3 Place a sheet of mylar film over entire disc and retain in place with the plastic ring. Trim away excess mylar.

8.7.2.4 Place the mounted sample on the photomultiplier tube with the mylar cover in direct contact with the tube.

8.7.2.5 Alpha count.

9. Calibration

9.1 General guidance information may be found in ASTM D 3648, Standard Practices for the Measurement of Radioactivity.

9.2 Counting standards to calibrate instrumental response to alpha particles are prepared from calibrated standards which are NBS certified or traceable to NBS certification.

9.3 Chemical preparation of counting standards must follow the same procedures as prescribed in Section 8.6 and 8.7.

9.4 Counter efficiency, E, is then determined by counting the calibration source for sufficient time to minimize counting error and is expressed as:

$$E = \frac{D - B}{G}$$

where:

D = observed count rate, cpm,
B = background count rate, cpm, and
G = activity of calibration source, dpm.

10. Calculation

10.1 The results of analysis, A, are expressed in picocuries per liter. This unit is useful for direct comparison to the maximum concentration level as determined from the National Interim Primary Drinking Water Regulations.

$$A = \frac{D - B}{E \times 2.22 \times 0.85 \times V}$$

where:

D = observed count rate, cpm,
B = background count rate, cpm,
E = counter efficiency
2.22 = conversion factor for dpm/pCi
0.85 = chemical yield, and
V = sample volume in liters

11. Precision and Accuracy

11.1 The U.S. Environmental Monitoring Systems Laboratory in Las Vegas, Nevada, is in the process of conducting a single laboratory study to determine the accuracy and precision of this test procedure.

Bibliography

1. Carl T. Bishop, et. al. "Tentative Method for the Determination of Plutonium-239 and Plutonium-238 in Water," MLM-MU-76-69-0002, Sept. 1976.

2. G. A. Burney and R. M. Harbour, "Radiochemistry of Neptunium," NAS-NS-3060, Dec. 1974.

3. George H. Coleman, "Radiochemistry of Plutonium," NAS-NS-3058, Sept. 1965.

4. James E. Grindler, "Radiochemistry of Uranium," NAS-NS-3050, March 1962.

5. E. K. Hyde, "Radiochemistry of Thorium," NAS-NS-3004, January 1960.

6. H. L. Krieger and B. Jacobs, "Analysis of Radioactive Contaminants in By-Products from Coal-Fired Power Plant Operations," EPA-600/4-78-039, July 1978.

7. Fletcher L. Moore, "Liquid-Liquid Extraction with High-Molecular-Weight Amines," NAS-NS-3101, December 1960.

8. R. A. Pennamen and T. K. Keenan, "Radiochemistry of Americium and Curium, " NAS-NS-3006, January 1960.

9. T. G. Scott and S. A. Reynolds, "Determination of Plutonium in Environmental Samples. Part II. Procedures." Radiochem. Radioanal. Letters, Vol. 23, p. 275 fl. (1975).

10. J. C. White and W. J. Ross, "Separations by Solvent Extraction with Tri-n-octylphosphine Oxide," NAS-NS-3102, February 1961.

11. 1979 Annual Book of ASTM Standards, Part 31, American Society for Testing and Materials, Philadelphia, Pa. (1979).

12. R. Lieberman and A.A. Moghissi, "Coprecipitation Techniques for Alpha Spectroscopic Determination of Uranium, Thorium and Plutonium," Health Physics, 15, 359 (1968).

SECTION 12
URANIUM IN DRINKING WATER -
RADIOCHEMICAL METHOD
METHOD 908.0

1. Scope and Application

1.1 This method covers the measurement of total uranium alpha particle activity in drinking water. Most drinking water sources, especially ground water sources, contain soluble carbonates and bicarbonates which complex and keep uranium in the water in solution.

1.2 Uranium isotopic abundances in drinking water sources are apt to be present in ratios different from the ratios in the deposits from which the uranium entered the water sources. The two predominant natural alpha emitting isotopes of uranium are uranium-234 and uranium-238. Uranium-238 is the predominant mass abundant isotope; greater than 99% compared to about 0.006% for uranium-234. However, uranium-234 has a specific activity for alpha particle emission that is 1.8×10^4 times greater than that of uranium-238. For an equilibrium condition, the activity of the uranium-234 is equal to that of the uranium-238. Therefore, the uranium mass concentration in water is not related to the alpha particle activity of the water.

1.3 The Drinking Water Regulations under the Safe Drinking Water Act, PL 93-523, require a measurement of uranium for drinking water samples that have a gross alpha activity greater than 15 pCi/l. A mass uranium concentration measurement of a water sample cannot be converted to uranium alpha activity without first analyzing for isotopic abundances. Therefore, a method such as this one is needed to determine the total uranium alpha activity of the sample, without doing an isotopic uranium analysis.

2. Summary of Method

2.1 The water sample is made acid by adding HCl and the sample is boiled to eliminate carbonate and bicarbonate ions. Uranium is coprecipitated with ferric hydroxide and separated from the sample. The uranium is then separated from other radionuclides which were carried down with the ferric hydroxide by dissolving the hydroxide precipitate in 8N HCl, putting the solution through an

anion exchange column, washing the column with 8N HCl, and finally eluting the uranium with 0.1N HCl. The uranium eluate is evaporated and the uranium chemical form is converted to nitrate. The residue is transferred to a stainless steel planchet, dried, flamed, and counted for alpha particle activity.

2.2 Uranium recovery is determined with blank samples spiked with known amounts of uranium and taken through the procedure as a regular sample.

2.3 Counting efficiency is determined by transferring measured aliquots of an uranium standard to a planchet, diluting with 6-8 ml of a 1 mg/ml HIO_3 solution in 4N HNO_3, evaporating to dryness, flaming the planchet, and counting in an alpha counter.

3. Sample Handling and Preservation.

3.1 Although carbonate ions in a water sample will help to keep uranium in solution, the addition of extra carbonate or bicarbonate ions to the sample as a preservative is not recommended because an increased carbonate concentration in the sample may cause some precipitation. Therefore, it is recommended that samples be preserved with HCl to pH 2 at the time of collection.

3.2 A sample size of at least 1 liter should be collected for uranium analysis.

4. Interferences

4.1 The only alpha-emitting radionuclide that may come through the chemistry and cause interference would be protactinium-231. However, protactinium-231 results from the decay of uranium-235, a low abundance natural isotope of uranium, and would therefore cause only a very small interference.

4.2 Since uranium is a naturally occuring radionuclide, reagents must be checked for uranium contamination by analyzing a complete reagent blank by the same procedure as used for the samples.

5. Apparatus - See Appendix D for details and specifications

5.1 Gas-flow proportional counting system or

5.2 Scintillation detection system

5.3 Glassware

5.4 Electric hot plate

5.5 Ion exchange column: approximately 13 mm (i.d.) x 150 mm long with a 100 ml reservoir.

5.6 Stainless steel counting planchets, 2 inch diameter by 1/4 inch deep.

5.7 Millipore filter apparatus, 47 mm.

6. Reagents

6.1 All chemicals should be of reagent grade or equivalent whenever they are commercially available.

6.2 Ammonium hydroxide, 6N: Mix 2 volumes 15N NH_4OH (conc.) with 3 volumes of water (carbonate-free.)

6.3 Anion exchange resin - Strongly basic, styrene, quaternary ammonium salt, 4% crosslinked, 100-200 mesh, chloride form (such as Dowex 1x4, or equivalent).

6.4 Ferric chloride carrier, 20 mg Fe^{+3}/ml: Dissolve 9.6g of $FeCl_3.6H_2O$ in 100 ml of 0.5 N HCl.

6.5 Hydriodic acid: HI (conc.), sp. gr. 1.5, 47%.

6.6 Hydrochloric acid, 12N: HCl (conc.), sp. gr. 1.19, 37.2%.

6.7 Hydrochloric acid, 8N: Mix 2 volumes 12N HCl (conc.) with 1 volume of water.

6.8 Hydrochloric acid, 6N: Mix 1 volume 12N HCl (conc.) with 1 volume of water.

6.9 Hydrochloric acid, 0.1N: - Mix 1 volume 0.5N HCl with 4 volumes of water.

6.10 Iodic acid, 1 mg/ml: Dissolve 100 mg HIO_3 in 100 ml 4N HNO_3.

6.11 Nitric acid, 16N: HNO_3 (conc.), sp. gr. 1.42, 70.4%.

6.12 Nitric acid, 4N: Mix 1 volume 16N HNO_3 (conc.) with 3 volumes of water.

6.13 Sodium hydrogen sulfite, $NaHSO_3$.

6.14 Sodium hydrogen sulfite, 1% in HCl: Dissolve 1g $NaHSO_3$ in 100 ml 6N HCl.

7. Calibrations

7.1 Determine a counting efficiency (E), for a known amount of standard uranium (about 1000 dpm) evaporated from a 6-8 ml volume of a 1 mg/ml HIO_3 solution in a 2 inch diameter stainless steel planchet. If the standard solution is an HCl solution, then aliquot portions of that solution must be converted to

nitrate/ HNO_3 solutions, eliminating all chloride ions from the solutions. This can be done by three successive evaporations after adding 5 ml portions of 16N HNO_3 to aliquot portions of the standard in small beakers (avoiding dry baking of the evaporated residue). The final solutions of the standard aliquots are made by adding 2 ml 4N HNO_3 solution to the third evaporated residues. Transfer the uranium standard aliquot solutions to 2 inch diameter stainless steel planchets.

Complete the transfer by rinsing the beakers two times with 2 ml portions of 4N HNO_3 and evaporate to dryness. Flame the planchets and count for at least 50 minutes for alpha particle activity. A reagent blank should be run along with the standard aliquots and should be alpha counted.

$$\text{Efficiency, cpm/dpm, (E)} = \frac{A - B}{C}$$

where:

A = gross cpm for standard
B = cpm for instrument background
C = dpm of standard used.

7.2 A uranium recovery factor R, is determined by the following procedure: Spike one liter tap water samples with aliquots of uranium standard solution (500-1000 dpm per sample). Take these spiked samples and a tap water blank through the entire procedure and count the separated and evaporated uranium for alpha particle activity.

$$\text{Recovery factor, (R)} = \frac{(F - B)}{CE}$$

where:

C = dpm of uranium standard added
F = gross cpm of spiked sample
B = cpm of reagent blank
E = efficiency factor, cpm/dpm

8. Procedure

8.1 Measure the volume of approximately one liter of the water sample to be analyzed.

8.1.2 If the sample has not been acidified, add 5 ml 12N HCl. and 1 ml ferric chloride carrier.

8.1.3 Mix the sample completely and use pH paper to check the hydrogen-ion concentration. If the pH is > 1, add 12N HCl until it reaches this value.

8.1.4 Cover with a watch glass and heat the water sample to boiling for 20 minutes.

8.1.5 The pH must be checked again after boiling and if it is > 1, 12N HCl must be added to bring the pH back to 1.

8.1.6 While the sample is still boiling gently add 6N NH_4OH to the sample from a polyethylene squeeze bottle with the bottle delivery tube inserted between the watch glass and the pouring lip of the beaker. The boiling action of the sample provides sufficient stirring action. Add 6N NH_4OH until turbidity persists while boiling continues; then add an additional 10 ml, (estimated addition from the squeeze bottle).

8.1.7 Continue to boil the sample for 10 minutes more; then set it aside for 30 minutes to cool and settle.

8.1.8 After the sample has settled sufficiently, decant and filter the supernate through a 47 mm 0.45 micron membrane filter, using the larger millipore filtering apparatus.

8.1.9 Slurry the remaining precipitate, transfer to the filtering apparatus and filter with suction.

8.1.10 Place the filtering apparatus over a clean 250 ml filtering flask, add 25 ml 8N HCl to dissolve precipitate, and filter the solution.

8.1.11 Add another 25 ml 8N HCl to wash the filter, and then filter.

8.1.12 Transfer solution to the 100 ml reservoir of the ion exchange column.

8.1.13 Rinse the side arm filtering flask twice with 25 ml portions of 8N HCl. Combine in the ion exchange reservoir.

8.2 Anion Exchange Separation

8.2.1 Prepare the column by slurrying the anion exchange resin with 8N HCl and pouring it onto a column of about 13 mm inside diameter. The height of the resin bed should be about 80 mm.

8.2.2 Pass the sample solution through the anion exchange resin column at a flow rate not to exceed 5 ml/min.

8.2.3 After the sample has passed through the column, elute the iron (and plutonium if present) with 6 column volumes of 8N HCl containing 1 ml 47% HI per 9 ml of 8N HCl (freshly prepared).

8.2.4 Wash the column with an additional two column volumes of 8N HCl.

8.2.5 Elute the uranium with six column volumes of 0.1N HCl.

8.2.6 Evaporate the acid eluate to near dryness and convert the residue salts to nitrates by three successive treatments with 5 ml portions of 16N HNO_3, evaporating to near dryness each time.

8.2.7 Dissolve the residue (may be very little visible residue) in 2 ml 4N HNO_3.

8.2.8 Transfer the residue solution, using a Pasteur pipet, to a marked planchet, and complete the transfer by rinsing the sample beaker three times with 2 ml portions of 4N HNO_3.

8.2.9 Evaporate the contents in the planchet to dryness, flame to remove traces of HIO_3, cool, and count for alpha particle activity.

8.3 Column Regeneration

8.3.1 Pass three column volumes of 1% $NaHSO_3$ in 6N HCl through the column.

8.3.2 Pass six column volumes of 6N HCl through the column.

8.3.3 Pass three column volumes of water through the column.

8.3.4 Pass six column volumes of 8N HCl through the column to equilibrate and ready the resin for the next set of samples.

9. Calculations

$$\text{Uranium alpha activity, pCi/l} = \frac{(S - B) \times 1000}{2.22 \times E\ R\ V}$$

where:

S = gross cpm for sample
B = cpm of reagent blank
V = volume of sample used, ml
E = efficiency, cpm/dpm
R = recovery factor
2.22 = conversion factor for dpm/pCi

10. Precision and Accuracy

In a single laboratory test of this method, a stock uranium solution was prepared using tap water and spiked with an NBS uranium standard. The calculated concentration was 26.7 pCi/l. This stock solution was acidified with HCl as a preservative. Nine 1-liter aliquots were

withdrawn and the procedure tested. Individual results were 22.4, 22.5, 24.0, 25.9, 26.9, 26.5, 24.6, 25.7 and 23.9 pCi/l. The average concentration was 24.7 pCi/l with a standard deviation of 1.7 pCi/l. From these data, the method shows a negative 7.4% bias and a precision of ± 6.7% without the correction of the recovery factor.

References

1. Bishop, C. T., et.al. "Radiometric Method for the Determination of Uranium in Water," EPA 600/7-79-093, EMSL-LV, April 1979.

2. Edwards, K. W. "Isotopic Analysis of Uranium in Natural Waters by Alpha Spectrometry," Radiochemical Analysis of Water, Geological Survey Water - Supply Paper 1696-F, U.S. Government Printing Office, Washington, D.C., 1968.

SECTION 13
URANIUM IN DRINKING WATER - FLUOROMETRIC METHOD
METHOD 908.1

1. Scope and Application

   1.1 The method covers the determination of soluble uranium in waters at concentrations greater than 0.1 µg/l. There is no upper limit, since waters whose uranium concentrations exceed the upper limit of the measurement range need only be diluted to be within this range.

   1.2 Uranium is present in surface and ground waters at concentrations generally less than 20 µg/l. This method is applicable for the monitoring of water discharges from industries related to the uranium fuel cycle. Since the method measures the mass of uranium, it is applicable to the assessment of chemical toxicity. The method can be indirectly used for the assessment of radiation effects if the isotopic composition is known or measured.

2. Summary of Method

   Uranium is concentrated by coprecipitation with aluminum phosphate. The aluminum phosphate is dissolved in dilute nitric acid containing magnesium nitrate as a salting agent and the coprecipitated uranium is extracted into ethyl acetate. After the ethyl acetate is removed by evaporation, the extracted residue is dissolved in nitric acid and diluted to volume in a small volumetric flask. Aliquots are transferred to each of two fusion dishes and dried. To one dish is added a known mass of uranium (0.1 µg) and dried. Flux containing sodium fluoride is added to each of the dishes, fused at a prescribed temperature, cooled and read in a fluorometer. The use of the standard addition technique corrects for any interference that may coextract with uranium.

3. Interferences

   3.1 The fluorescence of uranium in a fluoride matrix can be quenched or enhanced by either cations or anions. When uranium is present in low concentration (less than 20 µg/l) these interferences can be eliminated by the coprecipitation of uranium on aluminum phosphate and subsequent uranium extraction into ethyl acetate.

3.2 Carbonate ions form soluble uranium complexes which prevent the coprecipitation on aluminum phosphate. Carbonates are removed by acidification and expelled from solution as volatile carbon dioxide.

4. Apparatus - See Appendix D for details and specifications

4.1 Fluorometer, Jarrell-Ash or equivalent.

4.2 Dish forming die, Cat. No. 26100, Fisher Scientific

4.3 Fusion dish blanks - Gold or Platinum 0.015" thickness x 0.75" diameter.

4.4 Muffle furnace - controlled temperature.

4.5 Microliter pipette - 100 µl.

4.6 Glassware

5. Reagents

5.1 Purity of Reagents - Reagent grade chemicals shall be used in all tests. Unless otherwise indicated, it is intended that all reagents shall conform to the specifications of the committee on analytical reagents of the American Chemical Society. Other grades may be used provided it is first ascertained that the reagent is of sufficiently high purity to permit its use without lessening the accuracy of the determination.

5.2 Purity of Water. Unless otherwise indicated, reference to water shall be understood to mean conforming to ASTM Specification D 1193, Type III.

5.3 Aluminum nitrate, 0.08M: Dissolve 15g $Al(NO_3)_3.9H_2O$ in 500 ml of water.

5.4 Ammonium hydroxide, 15N: NH_4OH (conc.) sp.gr. 0.90, 56.6%.

5.5 Diammonium hydrogen phosphate 0.11M: Dissolve 7.26g $(NH_4)_2HPO_4$ in 500 ml water.

5.6 Ethyl acetate, $CH_3COOC_2H_5$, reagent grade

5.7 Flux: Mix together 9 parts NaF, 45.5 parts Na_2CO_3, 45.5 parts K_2CO_3 by weight in a ball mill.

5.8 Magnesium nitrate, 3.5M: Dissolve 449g $Mg(NO_3)_2.6H_2O$ in 350 ml water containing 32 ml 16N HNO_3. Warm if necessary to dissolve. Cool and dilute to 500 ml.

5.9 Nitric acid, 16N: HNO_3 (conc.), sp. gr. 1.42, 70.4%.

5.10 Nitric acid, 0.1N: Mix 1 volume 16N HNO_3 (conc.) with 159 volumes of water.

5.11 Phenolphthalein (5g/l): Dissolve 0.5g phenolphthalein in 50 ml ethanol (95%) and dilute to 100 ml with water.

5.12 Sodium thiosulfate, $Na_2S_2O_3$: crystal

5.13 Uranium standard stock solution. 1000 µg/ml. Weigh out 0.1179g U_3O_8 into a 100 ml beaker and dissolve in 10 ml 1N HNO_3, warming on a hot plate as required. Transfer to a 100 ml volumetric flask with water and dilute to volume.

5.14 Uranium standard solution, 10 µg/l. Transfer 5.0 ml of the 1000 µg/l uranium solution to a 500 ml volumetric flask and dilute to volume with 0.1N HNO_3.

5.15 Uranium standard solution, 1 µg/l. Transfer 10.0 ml of the 10 µg/l uranium solution to a 100 ml volumetric flask and dilute to volume with 0.1N HNO_3.

5.16 Uranium standard solution, 0.1 µg/l: Transfer 10.0 ml of the 1.0 µg/l uranium solution to a 100 ml volumetric flask and dilute to volume with 0.1N HNO_3.

6. Procedure

6.1 Direct Analysis (Samples greater than 20 µg/l).

6.1.1 Transfer two 100 µl aliquots of the filtered sample to each of two gold dishes and evaporate to dryness under heat lamps.

6.1.2 To one of the gold dishes add 100 µl of a uranium standard (0.1 µg/ml for samples 20-400 µg/l or 1.0 µg/ml for samples greater than 400 µg/l).

6.1.3 Evaporate to dryness under a heat lamp.

6.1.4 Using a balance sensitive to at least one milligram, weigh out 400 ± 4 mg flux into each of the two gold dishes.

6.1.5 Prepare a blank flux sample by weighing out 400 ± 4 mg flux into a clean gold dish.

6.1.6 Place the three gold dishes into a stainless steel support and place in a preheated muffle furnace at 625°C for 15 minutes.

6.1.7 Remove from furnace and cool in a desiccator for 30 minutes.

6.1.8 Read in a fluorometer as directed in Section 7.0.

6.2 Coprecipitation (Samples less than 20 µg/l).

6.2.1 Measure a 1 liter aliquot of filtered water into a 1500 ml beaker.

6.2.2 Acidify with 2 ml 16N HNO_3 (This may be omitted if sample was previously acidified for preservation).

6.2.3 Add 5 ml each of the aluminum nitrate and diammonium hydrogen phosphate solutions and mix.

6.2.4 If sample was chlorinated as in the case of a drinking water sample, add one crystal of sodium thiosulfate and stir.

6.2.5 Heat to near boiling to expel dissolved carbon dioxide gas.

6.2.6 Add 5 drops of phenolphthalein indicator and neutralize to the pink end point using 15N NH_4OH.

6.2.7 Lower the heat and digest sample for 30 minutes.

6.2.8 Remove from heat, cool, and settle for one hour.

6.2.9 Decant and filter the clarified supernate through a 47 mm glass fiber filter, transferring the settled precipitate at the very end.

6.2.10 Wash beaker and filter with small portions of water.

6.2.11 Fold filter into thirds (similar to the folding of a letter) and transfer to a 50 ml screw cap centrifuge tube.

Note: If some of the precipitate remains on the inside edges of the filtering apparatus gently wipe with the folded filter before transferring to the centrifuge tube.

6.2.12 Add 15 ml 3.5M $Mg(NO_3)_2.6H_2O$ to the centrifuge tube to dissolve the aluminum phosphate.

6.2.13 Add 10 ml ethyl acetate, securely cap the tube and mix thoroughly for one minute using a vortex mixer.

6.2.14 Centrifuge at 2000 rpm for 5 minutes.

6.2.15 Using a Pasteur transfer pipette, transfer about 9 ml of the top layer (ethyl acetate) to a 30 ml beaker.

6.2.16 Repeat steps 6.2.13 to 6.2.15 two more times.

6.2.17 Slowly evaporate the combined ethyl acetate fractions to dryness.

6.2.18 Add 1 ml 16N HNO_3 and dissolve residue.

6.2.19 Using the same Pasteur pipette, transfer the nitric acid to a 5 ml volumetric flask.

6.2.20 Add 1 ml of water to the beaker, wash down the sides of the beaker using the pipet, and transfer to the 5 ml volumetric flask.

6.2.21 Repeat 6.2.20 two more times.

6.2.22 Gently mix, cool, dilute to volume with water, and shake thoroughly.

6.2.23 Proceed with steps 6.1.1 through 6.1.8, using the 1.0 µg/ml uranium standard.

7. Fluorometric Determination

7.1 Place the gold dish containing the sample plus the uranium spike into the fluorometer.

7.2 Following the manufacturer's suggested technique, adjust the voltage to maximize the reading such as full scale deflection.

7.3 Remove the spiked sample, insert the background sample and adjust the null voltage to read zero.

7.4 Repeat steps 7.2 and 7.3 until no more voltage adjustments are required.

7.5 Insert the gold dish containing the sample only and record the output.

8. Calculations

8.1 The results of the analysis are expressed in micrograms per liter and are calculated as follows:

$$\text{Uranium, } \mu g/l = \frac{5\left[\dfrac{R_s - R_b}{R_{ss} - R_s}\right] \times a}{b \times V}$$

where:

R_s = Reading of the sample
R_b = Reading of the blank
R_{ss} = Reading of the spiked sample
a = Mass of the uranium spike, ug
b = Aliquot size of the concentrate, ml
V = Initial sample size in liters
5 = Volume of the volumetric flask, ml

8.2 In the case where the uranium concentration is greater than 20 µg/l and no concentration procedure is performed, the factors "5" and "b" of the above equation are deleted.

9. Precision and Accuracy

9.1 Precision

9.1.1 The single laboratory precision of the method was evaluated by replicate analyses of a spiked uranium sample at the 10 µg/l concentration. The standard deviation is calculated from the equation:

$$S = \left[\frac{\Sigma(X_i^2) - \frac{(\Sigma X_i)^2}{N}}{N - 1} \right]^{1/2}$$

where:

$\Sigma(X_i^2)$ = summation of the squares of the individual results

$(\Sigma X_i)^2$ = square of the summation of the individual results

N = number of results

9.1.2 The coefficient of variation (CV) is calculated from the equation.

$$CV = \frac{100\ S}{X}$$

where:

S = standard deviation from the above equation
X = mean value of the individual results

9.1.3 Using the above equations, the coefficient of variation has been estimated as ± 15%.

9.2 Accuracy or Bias

9.2.1 The single laboratory accuracy of the method was evaluated over the uranium concentration range of 1-10 µg/l. The percent accuracy was calculated from the equation:

$$\%\ \text{Accuracy} = \frac{100\ (X_i - X_t)}{X_t}$$

where:

X_i = determined value of individual sample
X_t = known value of the sample

9.2.2 The average percent accuracy, A, is calculated from the equation:

$$A = \frac{\Sigma \text{ \% Accuracy}}{N}$$

where:

Σ% Accuracy = Summation of the individual accuracy determination
N = number of determinations

9.2.3 The single laboratory evaluation of the average percent accuracy is estimated to be $\pm$ 104%.

References

1. Barker, F.B., et al., "Determination of Uranium in Natural Waters," Geol. Survey Water Supply Paper, 1696-C (1965).

2. Blanchard, R., "Uranium Decay Series Disequilibrium in Age Determination of Marine Calcium Carbonates," Ph.D. Thesis, Washington University, St. Louis, Mo. June 1963.

3. Edward, K.W., "Isotopic Analysis of Uranium in Natural Waters by Alpha Spectroscopy," Geological Survey Water Supply Paper 1696-F, (1968).

4. Grimaldi, F.S., et al., "Collected Papers on Methods of Analysis for Uranium and Thorium," Geological Survey Bulletin 1006, (1954).

APPENDIX A

METHOD CAPABILITIES
PRECISION AND ACCURACY SUMMARY

Method #	Drinking Water Procedure	Type of Testing[1]	pCi/l Minimum Detectable Level[2] (3-Sigma)	% Precision	% Coefficient Variation	% Bias
900.0	Gross Alpha	C	1.0	15	±12	±10
900.0	Gross Beta	C	0.5	8	± 5	±5
900.1	Gross Radium Screen	R	0.25	10	± 5	±10
901.0	Cesium	R	1.0	4	± 5	±15
902.0	Iodine	C	1.0	2	± 4	±10
903.0	Alpha Emitting Radium Isotopes	C	0.5	5	±25	±30
903.1	Radium-226	C	0.5	15	±10	±20
904.0	Radium-228	R	1.0	15	±30	± 5
		C	1.0	30	±20	± 5
905.0	Strontium	R	0.5	5	± 5	± 5
		C	0.5	15	±20	± 5
906.0	Tritium	C	300	25	± 5	± 5
907.0	Actinides (Tentative)	U	-	-	-	-

Method #	Drinking Water Procedure	Type of Testing[1]	pCi/l Minimum Detectable Level[2] (3-Sigma)	% Precision	% Coefficient Variation	% Bias
908.0	Uranium-Radiochemical	R	1.0	7	±10	± 8
908.1	Uranium-Fluorometry	R	1.0	4	±15	± 5

(1) C = results of collaborative test study
R = results of single-lab replicate test study
U = results are forthcoming

(2) Based on 1000 ml sample and 100 min counting time unless otherwise designated in the procedure.

APPENDIX B

ERROR AND STATISTICAL CALCULATIONS

Radioactivity determinations include analytical and counting errors. In the collaborative testing for each method, estimated standard deviations were reported which included both analytical and counting errors. The total error can only be determined when a large number of samples are analyzed.

In order to have an estimate of the variation in a single analysis, a counting error is calculated. For an analysis of a single sample, this calculation will ensure that the counting error contribution to the total error is relatively small.

Because of the random nature of radioactive disintegrations there is an error associated with any measured count of these disintegrations. The variability of any measurement is indicated by the standard deviation. The standard deviation S_n, of the net counting rate, is determined by the following equation:

$$S_n = \left[\frac{R_o}{t_1} + \frac{B}{t_2} \right]^{1/2} \qquad (1)$$

where:

R_o = gross count rate
t_1 = counting time for the gross count
B = background count rate
t_2 = counting time for the background count

The counting error (CE) for a given sample expressed in pCi/l and at the 95% confidence level is shown by:

$$CE = \frac{1.96\ S_n \times 1000}{2.22\ E\ VF} \qquad (2)$$

where:

1.96 = 95% confidence factor
2.22 = conversion factor from dpm/pCi,

E = efficiency factor, cpm/dpm
V = volume of the aliquot analyzed, in ml
F = recovery factor

The best estimate of standard deviation of a number of experimental analyses or observations, (S_o), is determined by:

$$S_o = \left[\sum_{i=1}^{n} (x_i - \bar{x})^2/(n - 1) \right]^{1/2} \qquad (3)$$

where:

x_i = activity (pCi/ml) of a given sample
$\bar{x}$ = mean activity (pCi/ml) of a series of analyses
n = the number replicate analyses

APPENDIX C

DETERMINATION OF COUNTING TIME FOR REQUIRED SENSITIVITY

This is the information and equations to be used for the determination of required counting times to meet the required sensitivities (detection limits) as given in the National Interim Primary Drinking Water Regulations (NIPDWR) (July 9, 1976) Section 141.25(c), and to be used in the monitoring for radionuclides under the Nuclear Regulatory Commission (NRC) and the Department of Energy (DOE) programs.

Three methods of calculation are provided: The first method is based on the definition of sensitivity in terms of detection limit in the NIPDWR. The second method is based on the lower limit of detection "LLD" as given in HASL-300, part D-08, and is recommended by the NRC and DOE. The second method includes a preselected percent chance of a false positive result for a sample having no activity (α) as well as a preselected per cent of confidence of detecting activity ($1-\beta$). In the NIPDWR the $1-\beta$ is given as 0.95 or 95% confidence. An $\alpha = 0.05$ and $1-\beta = 0.95$ have been selected for the second method below. The third method is similar to the second method but based on approximations to the first method.

Method I

From the definition of sensitivity (detection limit) in the NIPDWR, at a precision of ± 100% at the 95% confidence level, the net count rate (N) would be:

$$N = 1.96 \quad S_n \tag{1}$$

Also, the standard deviation, (S_n) of the net count rate, (N), can be calculated from Equation 1 (Appendix B).

$$S_n = \left[\frac{R_o}{t_1} + \frac{B}{t_2}\right]^{1/2} \tag{2}$$

where:

R_o = gross count rate = net count rate (N) plus the background count rate (B)
t_1 and t_2 = the counting times for the gross count and background count respectively.

Equating equations (1) and (2):

$$N = 1.96 \left[\frac{R_o}{t_1} + \frac{B}{t_2} \right]^{1/2} \qquad (3)$$

This can be further simplified by setting $R_o = N + B$.

When sample radioactivity count rate is near the detector background count rate (as with drinking water and other environmental type samples), then the sample counting time and the detector background counting time should be about equal.

If the sample counting time (t_1) is equal to the background counting time (t_2), and $R_o = N + B$, then equation (3) can be simplified to:

$$N = 1.96 \left[\frac{N + 2B}{t_1} \right]^{1/2} \qquad (4)$$

Solving for t_1:

$$t_1 = \frac{3.84\ N + 7.68B}{N^2} \qquad (5)$$

Example 1

Assume a water supply has a total dissolved solids, (TDS) of 80 mg/250 ml (320 mg/l), the counting system has a counting efficiency of 6.00% (0.0600 cpm/dpm) for ^{241}Am alpha particles emitted from a 2-inch diameter dish containing 80 mg of water solids, and an alpha background of 0.05 cpm. How long must a 80 mg/250 ml aliquot (evaporated) be counted to meet the required 3 pCi/l sensitivity?

For the assumptions given the net counting rate (N) would be:

N = Sensitivity x volume x efficiency x 2.22
N = (3 pCi/l) (0.25 l) (0.06 cpm/dpm) (2.22 dpm/pCi)
N = 0.0999 cpm

Then substituting N = 0.0999 and B = 0.05 into equation (5) gives a required counting time of:

$$t_1 = \frac{3.84\ (0.0999) + 7.68\ (0.05)}{(0.0999)^2} = 77 \text{ min.}$$

Example 2

Assume a water supply has a TDS of 80 mg/100 ml (800 mg/l) and the same counting efficiency and alpha background as above. What counting time will be

required for the 3 pCi/l sensitivity?
For the assumptions given the net counting rate (N) would be:

N = (3 pCi/l) (0.1 l) (0.060 cpm/dpm) (2.22 dpm/pCi)
N = 0.040 cpm

Then substituting N = 0.040 and B = 0.05 into equation (5) gives a required counting time of:

$$t_1 = \frac{3.84\ (0.040) + 7.68\ (0.05)}{(0.040)^2} = 336 \text{ min.}$$

Method II

From HASL-300* the LLD may be approximated as LLD $\cong$ $(K_\alpha + K_\beta)S_o$ (1)

where:

K_α = the value for the percentile of the standardized normal variate corresponding to the preselected risk for concluding falsely that activity is present (α),
K_β = the corresponding value for the predetermined degree of confidence for detecting the presence of activity (1-β), and
S_o = the estimated standard error for the net sample activity

If the values of α and β are set at the same level and if the gross activity and background activity are close, the following approximation may be made:

$$S_o = (S^2_{gross} + S^2_{bkg})^{1/2} = (2\ S^2_b)^{1/2} = S_b\ (2)^{1/2}$$

$$S_o = 1.414\ S_b \qquad (2)$$

Then, equation (1) becomes

$$LLD = 2K\ S_o = 2K\ (1.414 S_b)$$

$$LLD = 2.828K\ S_b \qquad (3)$$

The values for K for common α's are:

α	1- β	K	2.828K
0.01	0.99	2.377	6.59
0.02	0.98	2.054	5.81
0.05	0.95	1.645	4.66
0.10	0.90	1.282	3.63
0.16	0.84	1.000	2.83
0.50	0.50	0	0

* Harley, J. H., ed. EML Procedures Manual, HASL-300, Env. Meas. Lab., U.S.DOE, New York, NY (1972)

In the equation $LLD = 2.83KS_b$, S_b = (Bkg count)$^{1/2}$ and the Bkg count = Bkg count rate x counting time (Bt)

$$S_b = (Bt)^{1/2} \tag{4}$$

$$LLD = 2.828K \cdot S_b = 2.828\ K \cdot (Bt)^{1/2} \tag{5}$$

$$N = \frac{LLD}{t} = \text{Sample net count rate}$$

Set $N = LLD = \frac{2.828K}{t} \cdot (Bt)^{1/2}$ and solve for t: (6)

$$Nt = 2.828K\ (Bt)^{1/2} \tag{7}$$

$$t\ (N^2t - (2.828)^2K^2B) = 0.$$

Use the positive root for t: (8)

$$t = \frac{(2.828)^2K^2B}{N^2} \tag{9}$$

For $\alpha = 0.05$ and $1-\beta = 0.95$, $K = 1.645$, using equation (9), we get:

$$t = \frac{(4.66)^2\ B}{N^2} = \frac{21.71\ B}{N^2}$$

then using the data for the same examples for Method I, the following results are obtained for Method II:

Example 1

Alpha background (B) = 0.05 cpm

Sample net count rate should be (N) = 0.0999 cpm for a required sensitivity or detection limit of 3 pCi/l.

then: $t = \frac{21.71\ (0.05)}{(0.0999)^2} = \frac{1.09}{0.01} = 109$ min.

Example 2

Alpha background (B) = 0.05 cpm
Sample net count rate should be (N) = 0.040 cpm

then: $t = \frac{21.71\ (0.05)}{(0.040)^2} = \frac{1.09}{0.0016} = 678$ min.

Method III

The definition of LLD from HASL-300 uses the approximation that the sample counting time and the background counting time are the same. A second approximation considers that the net count is very small or very close to zero. If these two approximations are also used with the EPA definition, we then would have:

$$LLD = N = 1.96\sqrt{\frac{2B}{t_B}} = 1.96\sqrt{2}\sqrt{\frac{B}{t_B}} = 2.77\ S_b$$

$$LLD = N = 2.77\ S_b$$

This definition is the approximation of the EPA definition converted to the HASL-300 form (equation 5)

$LLD = 2.828K \cdot S_b$
If we set $2.77\ S_b = 2.828K\ S_b$
Then $K = 0.98$
This gives $LLD = 2.828 \cdot 0.98\ S_b = 2.77\ S_b$
for $K = 0.98$, this is equivalent to an α of 16% and $1-\beta$ of 84%.
Therefore, the table shows $2.77\ S_b$ values for time, since this is the HASL-300 approximation of the EPA definition.

The table gives values of t for:

$$t = \frac{(2.828)^2\ (0.98)^2\ B}{N^2} = \frac{7.681B}{N^2}$$

Example 1

Alpha background (B) = 0.05 cpm
Sample net count rate should be (N) = 0.0999 cpm for a required sensitivity or detection limit of 3 pCi/l.

then $t = \frac{7.681\ (0.05)}{(0.0999)^2} = \frac{0.384}{0.01} = 38.4$ min.

Example 2

Alpha background (B) = 0.05 cpm
Sample net count rate should be (N) = 0.040 cpm

then $t = \frac{7.681\ (0.05)}{(0.040)^2} = \frac{0.384}{0.0016} = 240$ min.

The next several tables contain compilations of required counting times for several conditions in order to attain a specified sensitivity. These tables only indicate the required counting times for an arbitrary set of conditions. In a laboratory, for a real set of conditions, when the required counting time becomes excessive (>1000 min), it is recommended that a new counting system or a larger sample or a combination of both, be used.

REQUIRED COUNTING TIMES FOR SENSITIVITY OF
1 PCI/LITER

BKGD C P M	COUNTNG EFF, %	SAMPLE SIZE, ML	REQ NET C P M	E P A T, MIN	4.66 S T, MIN
0.05	16	100	0.04	412.6	860.6
0.05	16	500	0.18	33.8	34.4
0.05	16	1000	0.36	13.9	8.6
0.05	32	100	0.07	130.2	215.1
0.05	32	500	0.36	13.9	8.6
0.05	32	1000	0.71	6.2	2.2
0.05	48	100	0.11	69.9	95.6
0.05	48	500	0.53	8.6	3.8
0.05	48	1000	1.07	3.9	1.0

BKGD C P M	COUNTNG EFF, %	SAMPLE SIZE, ML	REQ NET C P M	E P A T, MIN	4.66 S T, MIN
0.10	16	100	0.04	717.1	1721.2
0.10	16	500	0.18	46.0	68.8
0.10	16	1000	0.36	16.9	17.2
0.10	32	100	0.07	206.3	430.3
0.10	32	500	0.36	16.9	17.2
0.10	32	1000	0.71	6.9	4.3
0.10	48	100	0.11	103.7	191.2
0.10	48	500	0.53	9.9	7.6
0.10	48	1000	1.07	4.3	1.9

BKGD C P M	COUNTNG EFF, %	SAMPLE SIZE, ML	REQ NET C P M	E P A T, MIN	4.66 S T, MIN
1.00	16	100	0.04	6197.9	17211.8
1.00	16	500	0.18	265.2	688.5
1.00	16	1000	0.36	71.7	172.1
1.00	32	100	0.07	1576.5	4303.0
1.00	32	500	0.36	71.7	172.1
1.00	32	1000	0.71	20.6	43.0
1.00	48	100	0.11	712.7	1912.4
1.00	48	500	0.53	34.3	76.5
1.00	48	1000	1.07	10.4	19.1

BKGD C P M	COUNTNG EFF, %	SAMPLE SIZE, ML	REQ NET C P M	E P A T, MIN	4.66 S T, MIN
10.00	16	100	0.04	61005.3	172118.1
10.00	16	500	0.18	2457.5	6884.7
10.00	16	1000	0.36	619.8	1721.2
10.00	32	100	0.07	15278.4	43029.5
10.00	32	500	0.36	619.8	1721.2
10.00	32	1000	0.71	157.7	430.3
10.00	48	100	0.11	6802.4	19124.2
10.00	48	500	0.53	277.9	765.0
10.00	48	1000	1.07	71.3	191.2

REQUIRED COUNTING TIMES FOR SENSITIVITY OF
2 PCI/LITER

BKGD C P M	COUNTNG EFF, %	SAMPLE SIZE, ML	REQ NET C P M	E P A T, MIN	4.66 S T, MIN
0.05	16	100	0.07	130.2	215.1
0.05	16	500	0.36	13.9	8.6
0.05	16	1000	0.71	6.2	2.2
0.05	32	100	0.14	46.1	53.8
0.05	32	500	0.71	6.2	2.2
0.05	32	1000	1.42	2.9	0.5
0.05	48	100	0.21	26.5	23.9
0.05	48	500	1.07	3.9	1.0
0.05	48	1000	2.13	1.9	0.2

BKGD C P M	COUNTNG EFF, %	SAMPLE SIZE, ML	REQ NET C P M	E P A T, MIN	4.66 S T, MIN
0.10	16	100	0.07	206.3	430.3
0.10	16	500	0.36	16.9	17.2
0.10	16	1000	0.71	6.9	4.3
0.10	32	100	0.14	65.1	107.6
0.10	32	500	0.71	6.9	4.3
0.10	32	1000	1.42	3.1	1.1
0.10	48	100	0.21	34.9	47.8
0.10	48	500	1.07	4.3	1.9
0.10	48	1000	2.13	2.0	0.5

BKGD C P M	COUNTNG EFF, %	SAMPLE SIZE, ML	REQ NET C P M	E P A T, MIN	4.66 S T, MIN
1.00	16	100	0.07	1576.5	4303.0
1.00	16	500	0.36	71.7	172.1
1.00	16	1000	0.71	20.6	43.0
1.00	32	100	0.14	407.6	1075.7
1.00	32	500	0.71	20.6	43.0
1.00	32	1000	1.42	6.5	10.8
1.00	48	100	0.21	187.2	478.1
1.00	48	500	1.07	10.4	19.1
1.00	48	1000	2.13	3.5	4.8

BKGD C P M	COUNTNG EFF, %	SAMPLE SIZE, ML	REQ NET C P M	E P A T, MIN	4.66 S T, MIN
10.00	16	100	0.07	15278.4	43029.5
10.00	16	500	0.36	619.8	1721.2
10.00	16	1000	0.71	157.7	430.3
10.00	32	100	0.14	3833.1	10757.4
10.00	32	500	0.71	157.7	430.3
10.00	32	1000	1.42	40.8	107.6
10.00	48	100	0.21	1709.6	4781.1
10.00	48	500	1.07	71.3	191.2
10.00	48	1000	2.13	18.7	47.8

REQUIRED COUNTING TIMES FOR SENSITIVITY OF
3 PCI/LITER

BKGD C P M	COUNTNG EFF, %	SAMPLE SIZE, ML	REQ NET C P M	E P A T, MIN	4.66 S T, MIN
0.05	16	100	0.11	69.9	95.6
0.05	16	500	0.53	8.6	3.8
0.05	16	1000	1.07	3.9	1.0
0.05	32	100	0.21	26.5	23.9
0.05	32	500	1.07	3.9	1.0
0.05	32	1000	2.13	1.9	0.2
0.05	48	100	0.32	15.8	10.6
0.05	48	500	1.60	2.6	0.4
0.05	48	1000	3.20	1.2	0.1

BKGD C P M	COUNTNG EFF, %	SAMPLE SIZE, ML	REQ NET C P M	E P A T, MIN	4.66 S T, MIN
0.10	16	100	0.11	103.7	191.2
0.10	16	500	0.53	9.9	7.6
0.10	16	1000	1.07	4.3	1.9
0.10	32	100	0.21	34.9	47.8
0.10	32	500	1.07	4.3	1.9
0.10	32	1000	2.13	2.0	0.5
0.10	48	100	0.32	19.5	21.2
0.10	48	500	1.60	2.7	0.8
0.10	48	1000	3.20	1.3	0.2

BKGD C P M	COUNTNG EFF, %	SAMPLE SIZE, ML	REQ NET C P M	E P A T, MIN	4.66 S T, MIN
1.00	16	100	0.11	712.7	1912.4
1.00	16	500	0.53	34.3	76.5
1.00	16	1000	1.07	10.4	19.1
1.00	32	100	0.21	187.2	478.1
1.00	32	500	1.07	10.4	19.1
1.00	32	1000	2.13	3.5	4.8
1.00	48	100	0.32	87.2	212.5
1.00	48	500	1.60	5.4	8.5
1.00	48	1000	3.20	2.0	2.1

BKGD C P M	COUNTNG EFF, %	SAMPLE SIZE, ML	REQ NET C P M	E P A T, MIN	4.66 S T, MIN
10.00	16	100	0.11	6802.4	19124.2
10.00	16	500	0.53	277.9	765.0
10.00	16	1000	1.07	71.3	191.2
10.00	32	100	0.21	1709.6	4781.1
10.00	32	500	1.07	71.3	191.2
10.00	32	1000	2.13	18.7	47.8
10.00	48	100	0.32	763.8	2124.9
10.00	48	500	1.60	32.5	85.0
10.00	48	1000	3.20	8.7	21.2

REQUIRED COUNTING TIMES FOR SENSITIVITY OF
4 PCI/LITER

BKGD C P M	COUNTNG EFF, %	SAMPLE SIZE, ML	REQ NET C P M	E P A T, MIN	4.66 S T, MIN
0.05	16	100	0.14	46.1	53.8
0.05	16	500	0.71	6.2	2.2
0.05	16	1000	1.42	2.9	0.5
0.05	32	100	0.28	18.3	13.4
0.05	32	500	1.42	2.9	0.5
0.05	32	1000	2.84	1.4	0.1
0.05	48	100	0.43	11.1	6.0
0.05	48	500	2.13	1.9	0.2
0.05	48	1000	4.26	0.9	0.1

BKGD C P M	COUNTNG EFF, %	SAMPLE SIZE, ML	REQ NET C P M	E P A T, MIN	4.66 S T, MIN
0.10	16	100	0.14	65.1	107.6
0.10	16	500	0.71	6.9	4.3
0.10	16	1000	1.42	3.1	1.1
0.10	32	100	0.28	23.0	26.9
0.10	32	500	1.42	3.1	1.1
0.10	32	1000	2.84	1.4	0.3
0.10	48	100	0.43	13.2	12.0
0.10	48	500	2.13	2.0	0.5
0.10	48	1000	4.26	0.9	0.1

BKGD C P M	COUNTNG EFF, %	SAMPLE SIZE, ML	REQ NET C P M	E P A T, MIN	4.66 S T, MIN
1.00	16	100	0.14	407.6	1075.7
1.00	16	500	0.71	20.6	43.0
1.00	16	1000	1.42	6.5	10.8
1.00	32	100	0.28	108.7	268.9
1.00	32	500	1.42	6.5	10.8
1.00	32	1000	2.84	2.3	2.7
1.00	48	100	0.43	51.3	119.5
1.00	48	500	2.13	3.5	4.8
1.00	48	1000	4.26	1.3	1.2

BKGD C P M	COUNTNG EFF, %	SAMPLE SIZE, ML	REQ NET C P M	E P A T, MIN	4.66 S T, MIN
10.00	16	100	0.14	3833.1	10757.4
10.00	16	500	0.71	157.7	430.3
10.00	16	1000	1.42	40.8	107.6
10.00	32	100	0.28	965.0	2689.3
10.00	32	500	1.42	40.8	107.6
10.00	32	1000	2.84	10.9	26.9
10.00	48	100	0.43	431.9	1195.3
10.00	48	500	2.13	18.7	47.8
10.00	48	1000	4.26	5.1	12.0

REQUIRED COUNTING TIMES FOR SENSITIVITY OF
10 PCI/LITER

BKGD C P M	COUNTNG EFF, %	SAMPLE SIZE, ML	REQ NET C P M	E P A T, MIN	4.66 S T, MIN
0.05	16	100	0.36	13.9	8.6
0.05	16	500	1.78	2.3	0.3
0.05	16	1000	3.55	1.1	0.1
0.05	32	100	0.71	6.2	2.2
0.05	32	500	3.55	1.1	0.1
0.05	32	1000	7.10	0.5	0.0
0.05	48	100	1.07	3.9	1.0
0.05	48	500	5.33	0.7	0.0
0.05	48	1000	10.66	0.4	0.0

BKGD C P M	COUNTNG EFF, %	SAMPLE SIZE, ML	REQ NET C P M	E P A T, MIN	4.66 S T, MIN
0.10	16	100	0.36	16.9	17.2
0.10	16	500	1.78	2.4	0.7
0.10	16	1000	3.55	1.1	0.2
0.10	32	100	0.71	6.9	4.3
0.10	32	500	3.55	1.1	0.2
0.10	32	1000	7.10	0.6	0.0
0.10	48	100	1.07	4.3	1.9
0.10	48	500	5.33	0.7	0.1
0.10	48	1000	10.66	0.4	0.0

BKGD C P M	COUNTNG EFF, %	SAMPLE SIZE, ML	REQ NET C P M	E P A T, MIN	4.66 S T, MIN
1.00	16	100	0.36	71.7	172.1
1.00	16	500	1.78	4.6	6.9
1.00	16	1000	3.55	1.7	1.7
1.00	32	100	0.71	20.6	43.0
1.00	32	500	3.55	1.7	1.7
1.00	32	1000	7.10	0.7	0.4
1.00	48	100	1.07	10.4	19.1
1.00	48	500	5.33	1.0	0.8
1.00	48	1000	10.66	0.4	0.2

BKGD C P M	COUNTNG EFF, %	SAMPLE SIZE, ML	REQ NET C P M	E P A T, MIN	4.66 S T, MIN
10.00	16	100	0.36	619.8	1721.2
10.00	16	500	1.78	26.5	68.8
10.00	16	1000	3.55	7.2	17.2
10.00	32	100	0.71	157.7	430.3
10.00	32	500	3.55	7.2	17.2
10.00	32	1000	7.10	2.1	4.3
10.00	48	100	1.07	71.3	191.2
10.00	48	500	5.33	3.4	7.6
10.00	48	1000	10.66	1.0	1.9

APPENDIX D

LABORATORY APPARATUS SPECIFICATIONS

1. Gas-flow proportional counting system: A gas-flow proportional counting system may be used for the measurement of gross alpha and gross beta activities. The detector may be either a "windowless" (internal proportional counter) or a "thin window" type. A minimum shielding equivalent to 5 cm of lead should surround the detector. A cosmic (guard) detector operated in anticoincidence with the main sample detector will convert this system to a low-background beta counter (< 3 cpm). The system shall be such that the sensitivity of the radioanalysis of water samples will meet or exceed the requirements of the drinking water promulgated standards. The instrument should have a lengthy voltage plateau for detecting alpha or beta radioactivity plus a scaler consisting of a register, power supply, amd amplifier.

2. Scintillator detector system: For measurement of alpha activities a scintillation system designed for alpha counting may be substituted for the gas-flow proportional counter described. In such a system, a Mylar disc coated with a phosphor (silver-activated zinc sulfide) is placed directly on the sample or on the face of a photomultiplier tube, enclosed within a light-tight container, along with the appropriate electronics (high voltage supply, amplifier, timer, and scaler).

3. Gamma spectrometer systems: Either a sodium iodide (NaI(Tl)) crystal or a solid state lithium drifted germanium (Ge(Li)) detector used in conjunction with a multichannel analyzer is required if the laboratory is to be certified for analyses of photon emitters from man-made radionuclides.

   If a sodium iodide detector is used, a 10 cm X 10 cm NaI cylindrical crystal is recommended, although, a 7.5 cm X 7.5 cm crystal is satisfactory. The detector must be shielded with a minimum of 10 cm of iron or equivalent. It is recommended that the distance from the center of the detector to any part of the shield should not be less than 30 cm. The multichannel analyzer, in addition to appropriate electronics, should contain a memory of not less than 200 channels.

   A system with a lithium drifted germanium (Ge(Li) detector may be used for measurement of these photon emitters if the efficiency of the detector is such that the sensitivity of the system meets the minimum detectable activity requirements.

4. Beta/Gamma coincidence scintillation system. Since iodine-131 has a distinctive beta-gamma decay chain and a high enough beta-particle energy to be efficiently detected, a beta/gamma coincidence technique can be employed for quantification. A system of high-resolution detectors and multichannel analyzers results in very low background.

5. Liquid scintillation spectrometer counting system. The measurement of low-energy beta emitters such as tritium or carbon-14 can be best determined by liquid scintillation counting. These instruments use an organic phosphor as the primary detector. This organic phosphor is combined with the sample in an appropriate solvent that achieves a uniform dispersion. The counting system normally uses two multiplier phototubes in coincidence, thus providing a lower background. In order to minimize detectable radioactivity, scintillation-grade organic phosphors and solvents, and low-potassium scintillation vials are used.

6. Scintillation cell system: For the specific measurement of radium-226 by the radon emanation method, a scintillation system designed to accept scintillation flasks ("Lucas cells") shall be used. The system consists of a light-tight enclosure capable of accepting the scintillation flasks, a detector (phototube), and the appropriate electronics (high voltage supply amplifier timers and scalers). The flasks (cells) required for this measurement may either be purchased from commercial suppliers or constructed according to published specifications.

7. Radon emanation apparatus: This specialized glassware apparatus consists of:

   Radon bubbler - Figure 2.
   Scintillation cell - Figure 3.
   The glassware can be fabricated by a competent glassblower, and the scintillation cell can be purchased from specified companies.

8. Fluorometer: An instrument to measure the fluorescence of a fused disc of a uranium compound exposed to ultraviolet light. The response to this excitation is proportional to the concentration of uranium in the drinking water sample. One of the specifications of the fluorometer is that it should be able to measure 0.0005 µg of uranium or less.

9. Analytical balance: Minimum scale readability, 0.1 mg.

10. Centrifuge:

    10.1 General purpose table-top model with a maximum speed of at least 3,000 rpm and a loading option of 4 x 50 ml.

    10.2 Floor model with a maximum speed of 2,000 rpm and a loading option of 4 x 250 ml centrifuge bottles.

11. pH meter: Accuracy, ±0.5 units. Scale readability, ±0.1 units. Instrument may be either line/bench or battery/portable.

12. Electric hot plate: This instrument should have a built-in stirrer, and stepless temperature controls which can be changed as heating requirements may demand.

13. Drying oven: The gravity convection type is recommended, having thermostatic controls to maintain desired temperature.

14. Mylar film: As a covering for precipitates to protect them during counting and storage, the thickness suggested is 0.0005 inches, in rolls of 1-1/2 inch width.

15. Stainless steel counting planchets: These should be fabricated from uniform surface density stainless steel and capable of withstanding nitric acid and heat treatment. The planchets should be flat, have a raised wall to contain the sample being evaporated and should be of the size determined by the inside diameter of the detector.

16. Drying lamps: As a minimum, these should consist of 250 watt infrared lamps with built-in reflectors that can be mounted on porcelain support stands.

17. Teflon filter holder: A fabricated device for filtering precipitates prior to mounting. These teflon units are to be made in dimensions compatible with the size of the plastic ring and disc mounts.

18. Plastic ring and disc mounts: These are plastic units molded of nylon in dimensions compatible with the size of the counting chamber of the counting instrument.

19. Desiccator:

    Aluminum models, normally used for plastic ring and disc planchets.

    Glass models, capable of holding a vacuum, and large enough to hold dried S.S. planchets until ready for counting.

20. Glassware: Borosilicate type glass. All glassware should meet Federal specifications. Beakers, 250 ml larger are required for specific analyses.

21. Glass fiber filters: These are type A-E, 47 mm in diameter.

22. Membrane filters: Metricel, 47 mm GA-6, 0.45 μ size.

23. Alpha sensitive phosphors - alpha phosphor disc, 24 mm ASP-4.

APPENDIX E

REPRESENTATIVE SOURCES OF LABORATORY SUPPLIES

1. Counting planchets

   a) Stainless steel

   Coy Laboratory Products
   P. O. Box 1108
   Ann Arbor, Mich. 48106
   (313) 663-1320

   Specifications: Catalog #75750 2 x 0.018 x 0.25 inches

   b) Plastic ring and disc mounts

   Control Molding Corp.
   84 Granite Avenue
   Staten Island, N. Y. 10303
   (212) 442-8733

   Specifications: Catalog #J-356, 1" dia (natural) nylon type 6/6

2. Glass-fiber filter paper

   Reeve-Angel
   Whatman, Inc.
   9 Bridewell Place
   Clifton, N.J. 07014
   (201) 777-4825
   (201) 773-5800

   Specifications: Grade 934AH, 2.8 cm

3. Electrodeposition apparatus

   Sargent-Welch Scientific Co.
   10400 Taconic Terrace
   Cincinnati, Ohio 45215
   (513) 771-3850

   Specifications: Catalog #S-29465, Sargent-Slomin model

4. Membrane filters

   Metricel, GA-6, 0.45u 25 mm and 47 mm

Gelman Instrument Company	Fisher Scientific
600 S. Wagner Road	585 Alpha Drive
Ann Arbor, Mich. 48106	Pittsburg, Pa. 15238
(313) 665-0651	(412 781-3400
Catalog #60173	Catalog #9-730-20

5. Mylar film

   Retail quantities can be obtained from local distributors: Specifications: 0.0005" (0.5mil) thick. Manufactured only by E.I. DuPont de Nemours.

6. Phosphors, alpha sensitive — W. B. Johnson & Associates, Inc.
Research Park
Montville, N. J. 07045
(201) 334-9222

Specifications: Catalog #ASP-4, 24 mm disc

7. Polypropylene centrifuge tube — Nalgene Labware

Retail quantities available from local distributors
Specifications: 134 mm x 28.7 mm O.D., Nalge #3100
50 ml Tube closure 29C, Nalge #C4085

8. Radon emanation bubblers

These and associated glassware can be fabricated by local glass companies with the specifications from Figures 3 and 4.

9. Scintillation solutions (commercial)

Packard Instruments Company
2200 Warrenville Road
Downers Grove, Ill. 60515
(312) 969-6000
Instagel

New England Nuclear
549 Albany Street
Boston, Mass. 02118
(617) 482-9595
Aquasol

Isolab, Inc.
Drawer 4350
Akron, Ohio 44321
(216) 825-4528
Scintisol Complete

Mallinckrodt, Inc.
Science Products Division
P. O. Box 5439
St. Louis, Mo. 63147
(314) 895-0123
Handifluor

Fisher Scientific Co.
717 Forbes Road
Pittsburgh, Pa. 15219
(412) 562-8300
Scintiverse "Scintidiox"

J. T. Baker Chemical Co.
222 Red School Lane
Phillipsburg, N. J. 08865
(201) 859-2151
"Scintrex"

Beckman Instruments Inc.
2500 Harbor Blvd.
Fullerton, Calif. 92634
(714) 871-4848
Ready-Solv MP

10. Scintillation vials

Specifications: Polyethylene or low potassium glass
20 ml capacity 22 mm screw cap

Catalog #6001075 — Packard Instrument Company
2200 Warrenville Rd.
Downers Grove, Ill. 60515
(312) 969-6000

	Catalog NEF #938	New England Nuclear 549 Albany Street Boston, Mass. 02118 (617) 482-9595
	Catalog #966350	Beckman Instrument Company Campus Drive at Jamboree Blvd. P. O. Box C-19600 Irvine, Calif. 92713 (714) 833-0751
11.	Teflon filter holder	Atomic Products Corporation Center Moriches, N. Y. 11934 (516) 878-1074
		Fluorulon Laboratories Box 305 Caldwell, N. J. 07006

APPENDIX F

REPRESENTATIVE SOURCES OF LABORATORY COUNTING INSTRUMENTS

I. Gas Flow Proportional Counting Systems: The range of prices for a complete system is from $3000 - $10,000.

1. Canberra Industries
   45 Gracey Avenue
   Meriden, Conn. 06450
   (203) 238-2351

2. Nuclear Measurements Co.
   24 N. Arlington Avenue
   Indianapolis, Ind. 46218
   (317) 546-2415

3. Tracor Analytic
   1842 Brummel Drive
   Elk Grove Village, Ill. 60007
   (312) 364-9100

4. Beckman Instruments, Inc.
   2500 Harbor Boulevard
   Fullerton, Calif. 92634
   (714) 871-4848

5. LND, Inc.
   3230 Lawson Boulevard
   Oceanside, N. Y. 11572
   (516) OR-8-6141

6. Baird-Atomic, Inc.
   125 Middlesex Turnpike
   Bedford, Mass. 01730
   (617) 276-6000

II. Liquid Scintillation Spectrometer Counting Systems: Depending upon what accessories are wanted, the price will range from $15,000 - $30,000.

1. Packard Instrument Co.
   2200 Warrenville Road
   Downers Grove, Ill. 60616
   (312) 969-6000

2. Beckman Instruments, Inc.
   2500 Harbor Boulevard
   Fullerton, Calif. 92634
   (714) 871-4848

3. Tracor Analytic
   1842 Brummel Drive
   Elk Grove Village, Ill. 60007
   (312) 364-9100

III. Scintillation Cell (Radon-Emanation) Counting Systems: At the present time one complete unit will be about $2500.

Specifications: Bias network, detector circuits, 6 digit decade counter. External high voltage supply and 2-inch photomultiplier tubes.

1. Randam Electronics, Inc.
   3091 Shadycrest Drive
   Cincinnati, Ohio 45239
   (513) 522-3322

2. Johnson Laboratories, Inc.
   Three Industry Lane
   Cockeysville, Md. 21030
   (301) 666-9500

3. Ortec, Inc.
   100 Midland Road
   Oak Ridge, Tenn. 37830
   (615) 482-4411

4. Eberline Instrument Corp.
   Airport Road, P.O. Box 2108
   Santa Fe, N. M. 87501
   (505) 471-3232

5. Ludlum Measurements Corp., Inc.
   501 Oak Street
   Sweetwater, Texas 79556
   (915) 235-5494

IV. Gamma Spectrometer Counting Systems: From the simplest system to one completely automated and including computer capabilities, the prices will range from $6,000 - $50,000.

1. Canberra Industries
   45 Gracey Avenue
   Meriden, Conn. 06450
   (203) 238-2351

2. Packard Instrument Co.
   2000 Warrenville Rd.
   Downers Grove, Ill. 60515
   (312) 969-6000

3. Edax International, Inc.
   P. O. Box 135
   Prairie View, Ill. 60069
   (312) 634-3870

4. Ortec, Inc.
   100 Midland Road
   Oak Ridge, Tenn. 37830
   (615) 482-4411

5. Nuclear Data, Inc.
   Golf and Meacham Road
   Schaumberg, Ill. 60172
   (312) 884-3600

6. Nuclear Enterprises, Ltd.
   935 Terminal Way
   San Carlos, Calif. 94070
   (415) 593-1455

7. Bicron Corp.
   12345 Kinsman Rd.
   Newbury, Ohio 44065
   (216) 564-2251

8. Tracor Northern, Inc.
   2551 W. Beltline Hwy.
   Middleton, Wisc. 53562
   (608) 836-6511

TECHNICAL REPORT DATA
(Please read Instructions on the reverse before completing)

1. REPORT NO. EPA-600/4-80-032	2.	3. RECIPIENT'S ACCESSION NO.
4. TITLE AND SUBTITLE "Prescribed Procedures for Measurement of Radioactivity in Drinking Water"		5. REPORT DATE August 1980
		6. PERFORMING ORGANIZATION CODE
7. AUTHOR(S) Herman L. Krieger and Earl L. Whittaker		8. PERFORMING ORGANIZATION REPORT NO.
9. PERFORMING ORGANIZATION NAME AND ADDRESS Radiological Methods Section, Physical and Chemical Methods Branch, Environmental Monitoring and Support Laboratory, Cincinnati, Ohio 45268		10. PROGRAM ELEMENT NO.
		11. CONTRACT/GRANT NO.
12. SPONSORING AGENCY NAME AND ADDRESS Environmental Monitoring and Support Laboratory, Office of Research and Development, U.S. Environmental Protection Agency, Cincinnati, Ohio 45268		13. TYPE OF REPORT AND PERIOD COVERED In-house
		14. SPONSORING AGENCY CODE EPA/600/06

15. SUPPLEMENTARY NOTES
This report is an update of the "Interim Manual," EPA-600/4-75-008, March 1976

16. ABSTRACT
Appropriate radiochemical procedures have been compiled in a laboratory manual for use in the analysis of gross alpha activity, gross beta activity, $^{134/137}Cs$, ^{131}I, $^{226/228}Ra$, $^{89,90}Sr$, ^{3}H, uranium, and the actinide elements, in drinking water. These methods possess the necessary sensitivity for achieving the maximum contaminant levels recommended by the U.S. Environmental Protection Agency in its Interim Primary Drinking Water Regulations. The method capabilities and minimum detection levels have been determined by replicate testing, by an internal quality assurance program, and collaborative test studies specifically designed for these nuclides.

17. KEY WORDS AND DOCUMENT ANALYSIS

a. DESCRIPTORS	b. IDENTIFIERS/OPEN ENDED TERMS	c. COSATI Field/Group
Radiochemistry Radioactive pollutants Potable water Quality control	Radiochemical analysis Methodology Maximum contaminant level Minimum detection level	13B

18. DISTRIBUTION STATEMENT Release to Public	19. SECURITY CLASS *(This Report)* Unclassified	21. NO. OF PAGES 143
	20. SECURITY CLASS *(This page)* Unclassified	22. PRICE

EPA Form 2220-1 (9-73)

☆ U.S. GOVERNMENT PRINTING OFFICE: 1980-657-165/0060

Environmental Protection Information
Agency Cincinnati OH 45268

Fees Paid
Environmental
Protection
Agency
EPA-335

Official Business
Penalty for Private Use, $300

Special Fourth-Class Rate
Book

Please make all necessary changes on the above label, detach or copy, and return to the address in the upper left-hand corner.

If you do not wish to receive these reports CHECK HERE ☐; detach, or copy this cover, and return to the address in the upper left-hand corner.

EPA-600/4-80-032