INDUSTRIAL WASTEWATER PERMIT RENEWAL APPLICATION

Florida Power & Light Company
St. Lucie Power Plant
Permit No. FL0002208

Prepared For: Florida Power & Light Company
700 Universe Boulevard
Juno Beach, FL 33408 USA

Submitted By: Golder Associates Inc.
6026 NW 1st Place
Gainesville, FL 32607 USA

July 2010

103-87527

A world of capabilities delivered locally

Golder Associates

TABLE OF CONTENTS

FDEP FORM 1

GENERAL INFORMATION

WASTEWATER FACILITY OR ACTIVITY PERMIT APPLICATION FORM 1 GENERAL INFORMATION

This form must be completed by all persons applying for a permit for a wastewater facility or activity under Chapter 62-620, F.A.C. See Form 1 to determine which other application forms you will need.

WASTEWATER FACILITY OR ACTIVITY PERMIT APPLICATION FORM 1 GENERAL INFORMATION

I - IDENTIFICATION NUMBER:

Facility ID FL0002208

II - CHARACTERISTICS:

INSTRUCTIONS: Complete the questions below to determine whether you need to submit any permit application forms to the Department of Environmental Protection. If you answer "yes" to any questions, you must submit this form and the supplemental form listed in the parenthesis following the question. Mark "X" in the blank in the third column if the supplemental form is attached. If you answer "no" to each question, you need not submit any of these forms. You may answer "no" if your activity is excluded from permit requirements. See Section B of the instructions. See also, Section C of the instructions for definitions of the terms used here.

SPECIFIC QUESTIONS	YES	NO	FORM ATTACHED
A. Is this facility a domestic wastewater facility which results in a discharge to surface or ground waters?		X	
B. Does or will this facility (either existing or proposed) include a concentrated animal feeding operation or aquatic animal production facility which results in a discharge to waters?		X	
C. Does or will this facility (other than those describe in A. or B.) discharge process wastewater, or non-process wastewater regulated by effluent guidelines or new source performance standards, to surface waters?	X		Form 2CS
D. Does or will this facility (other than those described in A. or B.) discharge process wastewater to ground waters?	X		Form 2CG
E. Does or will this facility discharge non-process wastewater, not regulated by effluent guidelines or new source performance standards, to surface waters?		X	
F. Does or will this facility discharge non-process wastewater to ground waters?		X	
G. Does or will this facility discharge stormwater associated with industrial activity to surface waters?	X		Form 2F
H. Is this facility a non-discharging/closed loop recycle system?		X	
I. Is this facility a public water system whose primary purpose is the production of potable water for public consumption and which discharges demineralization concentrate to surface water or groundwater?		X	

III - NAME OF FACILITY: (80 characters and spaces)

FPL St. Lucie Power Plant

DEP Form 62-620.910(1)
(Effective July 7, 2006)

Facility ID FL0002208

IV - FACILITY CONTACT: (A. 30 characters and spaces)

A. Name and Title (Last, first, & title)	B. Phone (area code & no.)
Vince Munne, Environmental Manager	(772) 467-7453

V - FACILITY MAILING ADDRESS: (A. 30 characters and spaces; B. 25 characters and spaces)

A. Street or P.O. Box: 6501 S. Ocean Drive		
B. City or Town: Jensen Beach	State: FL	Zip Code: 34957

VI - FACILITY LOCATION: (A. 30 characters and spaces; B. 24 characters and spaces; C. 3 spaces (if known); D. 25 characters and spaces; E. 2 spaces; F. 9 spaces)

A. Street, Route or Other Specific Identifier: 6501 S. Ocean Drive		
B. County Name: St. Lucie	C. County Code (if known):	
D. City or Town: Jensen Beach	E. State: FL	F. Zip Code: 34957

VII - SIC CODES: (4-digit, in order of priority)

1. Code #: 4911	(Specify) Electric Serv	2. Code #:	(Specify)
3. Code #:	(Specify)	4. Code #:	(Specify)

VIII - OPERATOR INFORMATION: (A. 40 characters and spaces; B. 1 character; C. 1 character (if other, specify); D. 12 characters; E. 30 characters and spaces; F. 25 characters and spaces; G. 2 characters; H. 9 characters)

A. Name: Florida Power & Light Company		B. Is the name in VIII A. the owner? ☒Yes ☐No	
C. Status of Operator: F = Federal; S = State; P = Private; O = Other; M = Public (other than F or S)	(code) P	(specify) Private	D. Phone No.: 772-467-7122
E. Street or P. O. Box: 700 Universe Blvd.			
F. City or Town: Juno Beach		G. State: FL	H. Zip Code: 33408

IX - INDIAN LAND:

A. Is the facility located on Indian lands?	☐ Yes	☒ No

Facility ID FL0002208

X - EXISTING ENVIRONMENTAL PERMITS:

A. NPDES Permit No.	B. UIC Permit No.	C. Other (specify)	D. Other (specify)
FL0002208		FWC 08SR-018A	Final Order No. DEP 08-0942

XI - MAP: Attach to this application a topographic map of the area extending to at least one mile beyond property boundaries. The map must show the outline of the facility, the location of each of its existing and proposed intake and discharge structures, each of its hazardous waste treatment, storage, or disposal facilities, and each well where it injects fluids underground. Include all springs, rivers and other surface water bodies in the map area. See instructions for precise requirements.

XII - NATURE OF BUSINESS (provide a brief description)

Electric power generating station.

XIII - CERTIFICATION (see instructions)

I certify under penalty of law that I have personally examined and am familiar with the information submitted in this application and all attachments and that, based on my inquiry of those persons immediately responsible for obtaining the information contained in the application, I believe that the information is true, accurate and complete. I am aware that there are significant penalties for submitting false information, including the possibility of fine and imprisonment.

Richard L. Anderson	FOR RLA
A. Name (type or print)	B. Signature
V.P., St. Lucie Power Plant	7/20/10
Official Title (type or print)	C. Date Signed

FDEP FORM 2CS

WASTEWATER APPLICATION FOR PERMIT TO DISCHARGE PROCESS WASTEWATER FROM NEW OR EXISTING INDUSTRIAL WASTEWATER FACILITIES TO SURFACE WATER

WASTEWATER APPLICATION FORM 2CS

PERMIT TO DISCHARGE PROCESS WASTEWATER
FROM NEW OR EXISTING
INDUSTRIAL WASTEWATER FACILITIES
TO SURFACE WATER

FORM
2CS

WASTEWATER APPLICATION FOR PERMIT TO DISCHARGE PROCESS WASTEWATER FROM NEW OR EXISTING INDUSTRIAL WASTEWATER FACILITIES TO SURFACE WATERS

Facility I.D. Number: FL0002208

Please print or type information in the appropriate areas.

I OUTFALL LOCATION For each outfall, list the X,Y coordinates and the name of the receiving water.
(latitude/longitude to the nearest 15 seconds)

A. Outfall No. (List)	B. Latitude			C. Longitude			D. Name of Receiving Water
	Deg.	Min.	Sec.	Deg.	Min.	Sec.	
D-001	27	21	05	80	14	26	Atlantic Ocean
I-003	27	20	57	80	14	48	Plant Discharge Canal
I-005	27	20	59	80	14	43	Plant Discharge Canal
I-007	27	20	52	80	14	41	Plant Discharge Canal
I-008	27	20	36	80	14	28	Plant Intake Canal

II OUTFALL DESIGN

A. Outfall No. (List)	B. Design Configuration and Construction Materials	C. Distance from shore	D. Diameter	E. Elevation of Discharge Invert (MSL)	F. Receiving Water Depth at POD (MSL)
D-001	Y-Port Diffuser Reinforced Concrete Pipe Multiport Diffuser Reinforced Concrete Pipe	1500 ft 1959-3375 ft	12 ft 16 ft	−36 ft −27 to −38 ft	−42 ft ± −33 to −44 ft
I-003	Low Volume Waste - Liquid Radiation Waste Stainless Steel Pipe	< 75 ft from canal shore	3.5 in	N/A	−12 ft ±
I-005	Low Volume Waste - Steam Generator Blowdown	< 75 ft from canal shore	4 in	N/A	−12 ft ±
I-007	Screen Wash Water Two concrete sluiceways Units 1 & 2	On canal shoreline	3 ft	+9 ft	−30 ft ±
I-008	Southeast Evaporation/Percolation Basin	On canal shoreline	N/A	N/A	−30 ft ±

Facility I.D. Number: FL0002208

II RECEIVING WATER INFORMATION

For each surface water that will receive effluent, supply the following information:

A. Name of Receiving Water	B. Check One		C. Classification (See Ch. 62-302, F.A.C.)	D. Type of Receiving Water (canal, river, lake, etc.)
	Fresh	Salt or Brackish		
Atlantic Ocean	☐	☒	III - Marine	Ocean
	☐	☐		
	☐	☐		
	☐	☐		
	☐	☐		
	☐	☐		

E. Minimum 7-day 10-year low flow of the receiving water at each outfall (if appropriate).

F. Identify and describe the flow of effluent from each outfall to a major body of water. A suitably marked map or aerial photograph may be used.

G. Do you request a mixing zone under Rule 62-4.244, F.A.C.? If yes, for what parameters or pollutants?

V FLOWS, SOURCES OF POLLUTION, AND TREATMENT TECHNOLOGIES

A. Attach a line drawing showing the water flow through the facility. Indicate sources of intake water, operations contributing wastewater to the effluent, and treatment units labeled to correspond to the more detailed descriptions in Item B. Construct a water balance on the line drawing by showing average flows between intakes, operations, treatment units, and outfalls. If a water balance cannot be determined (e.g., for certain mining activities), provide a pictorial description of the nature and amount of any sources of water and any collection or treatment measures.

Refer to Figures 2 and 3.

B. For each outfall, provide a description of:

Refer to Attachment A.

1. All operations contributing wastewater to the effluent; including process wastewater, sanitary wastewater, cooling water, and stormwater runoff;

2. The average flow contributed by each operation; and

3. The treatment received by the wastewater.

Use the space on the next page. Continue on additional sheets, if necessary.

(1) Outfall No. (List)	(2) Operation(s) Contributing Flow (a) Operation (list)	(b) Avg. Flow & Units	(3) Treatment (a) Description	(b) List Code from Table 2CS-1	
D-001	All operations listed below	1,487 MGD	Point of Discharge to Atlantic Ocean	4-B	
	Unit 1 and Unit 2 Once-Through		Screening	1-T	
	and Auxiliary Cooling Water		Chlorination (Biofouling control)	XX	
			Discharge to Surface Water	4-A	
I-003	Low Volume Waste	0.0234 MGD	Filtration (Fiber Cartridge)	XX	
	Liquid Radiation Waste		Ion Exchange	2-J	
			Discharge to Surface Water	4-A	
I-005	Low Volume Waste	0.109 MGD	Ion Exchange	2-J	
	Steam Generator Blowdown		Discharge to Surface Water	4-A	
07	Intake Screen Wash	N/A	Screening	1-T	
			Discharge to Surface Water	4-A	
I-008	SE Evaporation/Percolation Basin	0.819 MGD	Sedimentation (Settling)	1-U	
			Evaporation	1-F	
			Percolation	1-Y	
			Discharge to Surface Water	4-A	

C. Except for storm runoff, leaks, or spills, are any of the discharges described in Items II-A or B intermittent or seasonal?
☒ Yes (complete the following table) ☐ No (go to D. below)

(1) Outfall No. (List)	(2)Operation(s) Contributing Flow(List)	(3) Frequency		(4) Flow				
		(a) Days per Week (specify avg.)	(b) Months per Yr. (specify avg.)	(a) Flow Rate (in mgd)		(b) Total Volume (specify with units)		(c) Duration (in days)
				Long Term Avg.	Max. Daily	Long Term Avg.	Max. Daily	
I-003	Low Volume - Liquid Radiation Waste	1	12	0.0233	0.036	0.0233 MG	0.036 MG	< 1
I-005	Low Volume Waste - Steam Generator Blowdown	1/4 wks	12	0.154	0.349	0.154 MG	0.349 MG	< 1
I-007	Intake Screen Wash Water	7	12	N/A	—	—	—	—
I-008	SE Evaporation/Percolation Basin	N/A	1	0.82	14.25	0.82 MG	14.25 MG	4

D. Describe practices to be followed to ensure adequate wastewater treatment during emergencies such as power loss and equipment failures causing shutdown of pollution abatement equipment of the proposed/permitted facilities.

Refer to Attachment A

E. List the method(s) and location(s) of flow measurement.

Refer to Attachment A

V PRODUCTION

A. Does an effluent guideline limitation promulgated by EPA under Section 304 of the Clean Water Act apply to your facility?

☐ Yes (complete Item V-B) ☒ No (go to Section VI)

B. Are the limitations in the applicable guideline expressed in terms of production (or other measure of operation)?

☐ Yes (complete Item V-C) ☒ No (go to Section VI)

C. If you answered "yes" to Item V-B, list the quantity which represents an actual measurement of your level of production, expressed in the terms and units used in the applicable effluent guideline, and indicate the affected outfalls.

1. AVERAGE DAILY PRODUCTION			2. Affected Outfalls
a. Quantity per Day	b. Units of Measure	c. Operation, Product, Materials, Etc. (specify)	(list outfall nos.)

Facility I.D. Number: FL0002208

VI IMPROVEMENTS

A. Are you now required by any Federal, State or local authority to meet any implementation schedule for the construction, upgrading or operation of wastewater treatment equipment or practices or any other environmental programs which may affect the discharges described in this application? This includes, but is not limited to, permit conditions, administrative or enforcement order, enforcement compliance schedule letter, stipulations, court orders, and grant or loan conditions.

☒ Yes (complete the following table) ☐ No (go to Item VI-B)

1. Identification of Condition, Agreement, Etc.	2. Affected Outfalls		3. Brief Description of Project	4. Final Compliance Date	
	a. No.	b. Source of Discharge		a. Required	B. Projected
Item VI.4., Permit FL0002208	D-001	Once-through and auxiliary cooling water	Revised Thermal Discharge Study*	July 19, 2010 (6 months prior to expiration date)	—
*Submitted as Attachment D of Substantial NPDES Permit Revision Response to FDEP RFI #1, June 8, 2010.					

B. OPTIONAL: You may attach additional sheets describing any additional water pollution control programs (or other environmental projects which may affect your discharges) you now have underway or which you plan. Indicate whether each program is now underway or planned, and indicate your actual or planned schedules for construction.

☐ Mark "X" if description of additional control programs is attached.

VII INTAKE AND EFFLUENT CHARACTERISTICS

A, B, & C: See instructions before proceeding--Complete one set of tables for each outfall -- Annotate the outfall number in the space provided. NOTE: Tables VII-A, VII-B, and VII-C are included on separate sheets number VII-1 through VII-9.

D. Use the space below to list any of the pollutants listed in Table 2CS-3 of the instructions, which you know or have reason to believe is discharged or may be discharged from any outfall. For every pollutant you list, briefly describe the reasons you believe it to be present and report any analytical data in your possession.

1. Pollutant	2. Source	1. Pollutant	2. Source
Dimethylamine	I-005 Steam Gen. Blowdown		

Facility I.D. Number: FL0002208

III POTENTIAL DISCHARGES NOT COVERED BY ANALYSIS

Is any pollutant listed in Item VII-C a substance or a component of a substance which you currently use or manufacture as an intermediate or final product or by-product?

☐ YES (list all such pollutants below) ☒ NO (go to IX)

IX BIOLOGICAL TOXICITY TESTING DATA

Do you have any knowledge or reason to believe that any biological test for acute or chronic toxicity has been made on any of your discharges or on a receiving water in relation to your discharge within the last 3 years?

☒ YES (identify the test(s) and describe their purposes below) ☐ NO (go to Section X)

Ninety-six hour static renewal definitive toxicity tests were conducted as required by the current NPDES - FL0002208 Permit for D-001 on May 29, 2006 and September 6, 2007. The tests were conducted using Mysidopsis bahia and Menidia beryllina. FDEP performed a similar test on April 10, 2010 as a part of the 5-year compliance performance testing. The results for the three tests were satisfactory.

X CONTRACT ANALYSIS INFORMATION

Were any of the analyses reported in Item VII performed by a contract laboratory or consulting firm?

☒ YES (list the name, address, telephone number, and certification number of, and pollutants analyzed by each such laboratory or firm below) ☐ NO (go to Section XI)

A. Name	B. Address	C. Telephone (area code & no.)	D. Pollutants Analyzed (list)
FPL Central Lab #E56078	6001 A Village Blvd. West Palm Beach, FL	561-640-2010	Oil and grease, sulfate, TSS (except I-003)
GEL, LLC #E87156	2040 Savage Rd. Charleston, SC 29407	843-556-8171	All analyses for I-003
Harbor Branch Lab #E93080	5600 US Hwy 1, Ft. Pierce, FL	772-465-2400	Fecal Coliforms
TestAmerica #E81010	3355 McLemore Drive Pensacola, FL 32514	850-474-1001	Mercury (except I-003)
Summit Environmental Labs. #E87688	3310 Win Street Cuyahoga Falls, OH 44223	330-253-8211	Radio chemistry (except I-003)
Xenco Laboratories #E86240	3231 NW 7th Avenue Boca Raton, FL	561-447-7373	Wet chemistry, metals, VOCs, SVOCs

Facility I.D. Number: FL0002208

CONNECTION TO REGIONAL POTW

A. Indicate the relationship between this project and area regional planning for wastewater treatment. List steps to be taken for this industrial wastewater facility to become part of an area-wide wastewater treatment system.

The majority of the St. Lucie Power Plant is connected to the South Hutchinson Island Wastewater Treatment Facility, although there still exist a small number of septic tanks.

XII-A CERTIFICATIONS FOR NEW OR MODIFIED FACILITIES

This is to certify the engineering features of this pollution control project have been designed by me and found to be in conformity with sound engineering principles, applicable to the treatment and disposal of pollutants characterized in the permit application. There is reasonable assurance, in my professional judgment, that the pollution control facilities, when properly maintained and operated, will discharge an effluent that complies with all applicable statutes of the State of Florida and the rules of the Department. It is also agreed that the undersigned, if authorized by the owner, will furnish the applicant a set of instructions for the proper maintenance and operation of the pollution control facilities and, if applicable, pollution sources.

Signature	Company Name
Name (please type)	Address
(Affix Seal)	Florida Registration No.:
	Telephone No::
	Date

I certify under penalty of law that this document and all attachments were prepared under my direction or supervision in accordance with a system designed to assure that qualified personnel properly gather and evaluate the information submitted. Based on my inquiry of the person or persons who manage the system or those persons directly responsible for gathering the information, the information submitted is, to the best of my knowledge and belief, true, accurate, and complete. I am aware that there are significant penalties for submitting false information, including the possibility of fine and imprisonment for knowing violations.

Name & Official Title (Please type or print)	Signature
Telephone No. (area code & No.)	Date Signed

XII-B CERTIFICATIONS FOR PERMIT RENEWALS

This is to certify the engineering features of this pollution control project have been examined by me and found to be in conformity with sound engineering principles, applicable to the treatment and disposal of pollutants characterized in the permit application. There is reasonable assurance, in my professional judgment, that the pollution control facilities, when properly maintained and operated, will discharge an effluent that complies with all applicable statutes of the State of Florida and the rules of the Department.

7/13/10 Signature

Joseph T. Dertien, P.E.
Name (please type)

(Affix Seal)

Golder Associates Inc.
Company Name

Address 6026 NW 1st Place
Gainesville, FL 32607

Florida Registration No.: 35500
Telephone No:: (352) 336-5600
Date July 13, 2010

I certify under penalty of law that this document and all attachments were prepared under my direction or supervision in accordance with a system designed to assure that qualified personnel properly gather and evaluate the information submitted. Based on my inquiry of the person or persons who manage the system or those persons directly responsible for gathering the information, the information submitted is, to the best of my knowledge and belief, true, accurate, and complete. I am aware that there are significant penalties for submitting false information, including the possibility of fine and imprisonment for knowing violations.

Richard L. Anderson, Vice President, St. Lucie Power Plant
Name & Official Title (Please type or print)

772-467-7100
Telephone No. (area code & No.)

FOR FLA
Signature

7/20/10
Date Signed

Facility ID. Number: FL0002208 Outfall No. D-001 POD

PLEASE PRINT OR TYPE ONLY: You may report some or all of this information on separate sheets instead of completing these pages. Use the same format. SEE INSTRUCTIONS.

VII. INTAKE AND EFFLUENT CHARACTERISTICS

PART A - You must provide the results of at least one analysis for every pollutant in this table. Complete one table for each outfall. See instructions for additional details.

1. Pollutant	2. Effluent							3. Units		4. Intake (optional)		
	a. Max. Daily Value		b. Max. 30-day Value		c. Annual Avg. Value		d. No. of Analyses	a. Concentration	b. Mass	a. Long Term Avg. Value		b. No. of Analyses
	(1) Conc.	(2) Mass	(1) Conc.	(2) Mass	(1) Conc.	(2) Mass				(1) Conc.	(2) Mass	
a Carbonaceous Biochemical Oxygen Demand (CBOD)	<20						1	mg/L		<20		1
b. Chemical Oxygen Demand (COD)	1,000						1	mg/L		1,510		1
c. Total Organic Carbon (TOC)	0.8						1	mg/L				
d. Total Suspended Solids (TSS)	27						1	mg/L		20		1
e. Total Nitrogen (as N)	0.606						1	mg/L		0.42		1
f. Total Phosphorus (as P)	<0.0055						1	mg/L		0.0632		1
g. Ammonia (as N)	0.085						1	mg/L		0.101		1
h. Flow - actual or projected	Value		Value 1487		Value 1428		365	MGD		Value		
i. Flow - design	Value		Value		Value					Value		
j. Specific Conductivity	Value 56,075		Value		Value		1	µS/cm		Value 56,050		
k. Temperature (winter)	Value		Value 39		Value 37		730	°C		Value		
l. Temperature (summer)	Value		Value 44		Value 42		730	°C		Value		
m. pH	Min. 8.1	Max 8.1	Min.	Max.			1	STANDARD UNITS				

PART B - Mark "X" in column 2a for each pollutant you know or have reason to believe is present. Mark "X" in column 2b for each pollutant you believe to be absent. If you mark column 2a for any pollutant which is limited either directly, or indirectly but expressly, in an effluent limitations guideline, you must provide the results of at least one analysis for that pollutant. For other pollutants for which you mark column 2a, you must provide quantitative data or an explanation of their presence in your discharge. Complete one table for each outfall. See the instructions for additonal details and requirements.

1. Pollutant and CAS No. (if available)	2. Mark "X"		3. Effluent							4. Units		5. Intake (optional)		
	a. believed present	b. believed absent	a. Maximum Daily Value		b. Max. 30-day Value (if available)		c. Long Term Avg. Value (if available)		d. No. of Analyses	a. Conc.	b. Mass	a. Long Term Avg. Value		b. No. of Analyses
			(1) Conc...	(2) Mass	(1) Conc.	(2) Mass	(1) Conc.	(2) Mass				(1) Conc.	(2) Mass	
a. Bromide (24949-67-9)	☒	☐	39.5						1	mg/L		36.9		1
b. Chlorine, Total Residual	☒	☐	0.06		<0.01		<0.01		365	mg/L				
c. Color	☒	☐	<0.5						1	CU		<0.5		1
d. Fecal Coliform	☒	☐	<1						1	CFU		ND		1
e. Fluoride (16984-48-8)	☐	☒												
f. Nitrate-Nitrite (as N)	☒	☐	0.201						1	mg/L		<0.009		1

: Item VII-B Contd.

Facility ID. Number FL0002208 Outfall No. D-001 POD

1. Pollutant and CAS No. (if available)	2. Mark "X"		3. Effluent							4. Units		5. Intake (optional)		
	a. believed present	b. believed absent	a. Maximum Daily Value		b. Max. 30-day Value (if available)		c. Long Term Avg. Value (if available)		d. No. of Analyses	a. Conc.	b. Mass	a. Long Term Avg. Value		b. No. of Analyses
			(1) Conc.	(2) Mass	(1) Conc.	(2) Mass	(1) Conc.	(2) Mass				(1) Conc.	(2) Mass	
g. Nitrogen, Total Organic (as N)	☒	☐	0.32						1	mg/L		0.32		1
h. Oil and grease	☒	☐	<1.4						4	mg/L		<1.4		1
i. Phosphorus, Total (as P) (7723-14-0)	☒	☐	<0.0055						1	mg/L		0.0632		1
j. Radioactivity														
(1) Alpha, Total	☒	☐	4						1	pCi/L		4.5		1
(2) Beta, Total	☒	☐	689						1	pCi/L		835		1
(3) Radium, Total	☐	☒												
(4) Radium 226, Total	☐	☒												
k. Sulfate (as SO_4) (14808-79-8)	☒	☐	2,600						1	mg/L		1,700		1
l. Sulfide (as S)	☐	☒												
m. Sulfite (as SO_3) (14265-45-3)	☐	☒												
n. Surfactants	☒	☐	0.046						1	mg/L		0.063		1
o. Aluminum, Total (7429-90-5)	☐	☒												
p. Barium, Total (7440-39-3)	☐	☒												
q. Boron, Total (7440-42-8)	☒	☐	4.4						1	mg/L		4.17		1
r. Cobalt, Total (7440-48-4)	☐	☒												
s. Iron, Total (7439-89-6)	☒	☐	49.6						1	µg/L		<45		1
t. Maagnesium, Total (7439-95-4)	☒	☐	1,220						1	mg/L		1,210		1
u. Molybdenum, Total (7439-98-7)	☒	☐	9.41						1	µg/L		9.27		1
v. Manganese, Total (7439-96-5)	☐	☒												
w. Tin, Total (7440-31-5)	☒	☐	<0.004						1	mg/L		<0.004		1
x. Titanium, Total (7440-32-6)	☒	☐	<6.1						1	µg/L		<6.1		1

Facility ID. Number: FL0002208 Outfall No. D-001 POD

PART C - If you are a primary industry and this outfall contains process wastewater, refer to Table 2c-2 in the instructions to determine which of the GC/MS fractions you must test for. Mark "X" in column 2a for all GC/MS fractions that apply to your industry and for ALL toxic metals, cyanides, and total phenols. If you are not required to mark column 2a (secondary industries, non-process wastewater outfalls, and non-required GC/MS fractions), mark "X" in column 2b for each pollutant you know or have reason to believe is present. Mark "X" in column 2c for each pollutant you believe is absent. If you mark column 2a for any pollutant, you must provide the results of at least one analysis for that pollutant. If you mark column 2b for any pollutant, you must provide the results of at least one anlysis for that pollutnat if you know or have reason to believe it will be discharged in concentrations of 10 ppb or greater. If you mark column 2b for acrolein, acrylonitrile, 2,4,dinitrophenol, or 2-methyl-4,6 dinitrophenol, you must provide the results of at least one analysis for each of these pollutants which you know or have reason to believe that you discharge in concentrations of 100 ppb or greater. Otherwise, for pollutants for which you mark column2b, you must either submit at least one analysis or briefly describe the reasons the pollutant is expected to be discharged. Note that there are 7 pages to this part; please review each carefully. Complete one table (all 7 pages) for each outfall. See instructions for additional details and requirements.

1. Pollutant and CAS No. (if available)	2. Mark "X"			3. Effluent							4. Units		5. Intake (optional)		
	a. testing required	b. believed present	c. believed absent	a. Maximum Daily Value		b. Max. 30-day Value (if available)		c. Long Term Avg. Value (if available)		d. No. of Analyses	a. Conc.	b. Mass	a. Long Term Avg. Value		b. No. of Analyses
				(1) Conc.	(2) Mass	(1) Conc.	(2) Mass	(1) Conc.	(2) Mass				(1) Conc.	(2) Mass	
METALS, CYANIDE, AND TOTAL PHENOLS															
1M. Antimony, Total (7440-36-0)	☒	☐	☐	<3.8						1	µg/L		<3.8		1
2M. Arsenic, Total (7723-14-0)	☒	☐	☐	<4.6						1	µg/L		<4.6		1
3M. Beryllium, Total (7440-41-7)	☒	☐	☐	<0.67						1	µg/L		<0.67		1
4M. Cadmium, Total (7440-43-9)	☒	☐	☐	<0.57						1	µg/L		<0.57		1
5M. Chromium, Total (7440-47-3)	☒	☐	☐	<1.1						1	µg/L		<1.1		1
6M. Copper, Total (7440-50-8)	☒	☐	☐	<9.6						1	µg/L		<9.6		1
7M. Lead, Total (7439-92-1)	☒	☐	☐	<3.1						1	µg/L		<3.1		1
8M. Mercury, Total (7439-97-6)	☒	☐	☐	<0.0002						1	µg/L		<0.0002		1
9M. Nickel, Total (7440-02-0)	☒	☐	☐	<5.2						1	µg/L		<5.2		1
10M. Selenium, Total (7782-49-2)	☒	☐	☐	8.02						1	µg/L		14		1
11M. Silver, Total (7440-22-4)	☒	☐	☐	<1.6						1	µg/L		1.91		1
12M. Thallium, Total (7440-28-0)	☒	☐	☐	1.4						1	µg/L		3.2		1
13M. Zinc, Total (7440-66-6)	☒	☐	☐	7.26						1	µg/L		6.43		1
14M. Cyanide, Total (57-12-5)	☒	☐	☐	0.0039						1	mg/L		<0.0013		1
15M. Phenols, Total	☒	☐	☐	<0.006						1	mg/L		<0.006		1
DIOXIN															
2,3,7,8-Tetra-chlorodibenzo-P-Dioxin (1764-01-6)	☐	☐	☒												
GC/MS FRACTION - VOLATILE COMPOUNDS															
1V. Acrolein (107-02-8)	☒	☐	☐	<3.45						1	µg/L		<3.45		1
2V. Acrylonitrile (107-13-1)	☒	☐	☐	<3.08						1	µg/L		<3.08		1

Facility ID. Number: FL0002208 Outfall No. D-001 POD

1. Pollutant and CAS No. (if available)	2. Mark "X"			3. Effluent							4. Units		5. Intake (optional)		
	a. testing required	b. believed present	c. believed absent	a. Maximum Daily Value		b. Max. 30-day Value (if available)		c. Long Term Avg. Value (if available)		d. No. of Analyses	a. Conc.	b. Mass	a. Long Term Avg. Value		b. No. of Analyses
				(1) Conc.	(2) Mass	(1) Conc.	(2) Mass	(1) Conc.	(2) Mass				(1) Conc.	(2) Mass	
GC/MS FRACTION - VOLATILE COMPOUNDS (Continued)															
3V. Benzene (71-43-2)	☒	☐	☐	<0.211						1	µg/L		<0.211		1
4V. Bis (Chloromethyl) Ether (542-88-1)	☐	☐	☒												
5V. Bromoform (75-25-2)	☒	☐	☐	2.85						1	µg/L		0.6		1
6V. Carbon Tetrachloride (56-23-5)	☒	☐	☐	<0.213						1	µg/L		<0.213		1
7V Chlorobenzene (108-90-7)	☒	☐	☐	<0.245						1	µg/L		<0.245		1
8V. Chlorodi-bromomethane (124-8-1)	☒	☐	☐	<0.256						1	µg/L		<0.256		1
9V. Chloroethane (74-00-3)	☒	☐	☐	<0.34						1	µg/L		<0.34		1
10V. 2-Chloro-ethylvinyl Ether (110-75-8)	☒	☐	☐	<0.612						1	µg/L		<0.612		1
11V. Chloroform (67-86-3)	☒	☐	☐	<0.263						1	µg/L		<0.263		1
12V. Dichloro-bromomethane (75-24-4)	☒	☐	☐	<0.191						1	µg/L		<0.191		1
13V. Dichloro-difluoromethane (75-71-8)	☒	☐	☐	<0.414						1	µg/L		<0.414		1
14V. 1,1-Dichloroethane (75-34-3)	☒	☐	☐	<0.255						1	µg/L		<0.255		1
15V. 1,2-Dichloroethane (107-06-2)	☒	☐	☐	<0.338						1	µg/L		<0.338		1
16V. 1,1-Dichloroethylene (75-35-4)	☒	☐	☐	<0.269						1	µg/L		<0.269		1
17V. 1,2,-Dichloropropane (78-87-5)	☒	☐	☐	<0.326						1	µg/L		<0.326		1
18V. 1,3-Dichloropropylene (542-75-6)	☒	☐	☐	<0.359						1	µg/L		<0.359		1
19V. Ethylbenzene (100-41-4)	☒	☐	☐	<0.196						1	µg/L		<0.196		1
20V. Methyl Bromide (74-83-9)	☒	☐	☐	<0.61						1	µg/L		<0.61		1
21V. Methyl Chloride (74-87-3)	☒	☐	☐	<0.25						1	µg/L		<0.25		1
22V. Methylene Chloride (74-98-2)	☒	☐	☐	<0.639						1	µg/L		<0.639		1
23V. 1,1,2,2-Tetra-chloroethane (79-34-5)	☒	☐	☐	<0.233						1	µg/L		<0.233		1
24V. Tetrachloroethylene (127-18-4)	☒	☐	☐	<0.508						1	µg/L		<0.508		1

Facility ID. Number: FL0002208 Outfall No. D-001 POD

1. Pollutant and CAS No. (if available)	2. Mark "X"			3. Effluent							4. Units		5. Intake (optional)		
	a. testing required	b. believed present	c. believed absent	a. Maximum Daily Value		b. Max. 30-day Value (if available)		c. Long Term Avg. Value (if available)		d. No. of Analyses	a. Conc.	b. Mass	a. Long Term Avg. Value		b. No. of Analyses
				(1) Conc.	(2) Mass	(1) Conc.	(2) Mass	(1) Conc.	(2) Mass				(1) Conc.	(2) Mass	
GC/MS FRACTION - VOLATILE COMPOUNDS (continued)															
25V. Toluene (108-88-3)	☒	☐	☐	<0.247						1	µg/L		0.32		1
26V. 1,2-Trans-Dichloroethylene (156-60-5)	☒	☐	☐	<0.399						1	µg/L		<0.399		1
27V. 1,1,2-Trichloroethane (71-55-6)	☒	☐	☐	<0.232						1	µg/L		<0.232		1
28V. 1,1,2-Trichloroethane (79-00-5)	☒	☐	☐	<0.288						1	µg/L		<0.288		1
29V. Trichloroethylene (79-01-6)	☒	☐	☐	<0.305						1	µg/L		<0.305		1
30V. Trichloro-fluoromethane (75-69-4)	☒	☐	☐	<0.301						1	µg/L		<0.301		1
31V. Vinyl Chloride (75-01-4)	☒	☐	☐	<0.414						1	µg/L		<0.414		1
GC/MS FRACTION - ACID COMPOUNDS															
1A. 2-Chlorophenol (95-57-8)	☒	☐	☐	<2.6						1	µg/L		<2.6		1
2A. 2,4-Dichlorophenol (120-83-2)	☒	☐	☐	<0.43						1	µg/L		<0.43		1
3A. 2,4-Dimethylphenol (105-67-9)	☒	☐	☐	<2.4						1	µg/L		<0.4		1
4A. 4,6-Dinitro-O-Cresol (534-53-1)	☒	☐	☐	<0.35						1	µg/L		<0.35		1
5A. 2,4-Dinitrophenol (51-28-5)	☒	☐	☐	<1.4						1	µg/L		<1.4		1
6A. 2-Nitrophenol (88-75-5)	☒	☐	☐	<0.24						1	µg/L		<0.24		1
7A. 4-Nitrophenol (100-02-7)	☒	☐	☐	<0.79						1	µg/L		<0.79		1
8A P-Chloro-M-Cresol (59-50-7)	☒	☐	☐	<0.22						1	µg/L		<0.22		1
9A Pentachlorophenol (87-86-5)	☒	☐	☐	<0.7						1	µg/L		<0.7		1
10A Phenol (108-95-2)	☒	☐	☐	<0.4						1	µg/L		<0.4		1
11A 2,4,5-Trichloro-phenol (88-06-2)	☒	☐	☐	<0.38						1	µg/L		<0.38		1
GC/MS FRACTION - BASE/NEUTRAL COMPOUNDS															
1B. Acenaphthene (63-32-9)	☒	☐	☐	<0.022						1	µg/L		<0.27		1
2B. Acenaphtylene (208-96-8)	☒	☐	☐	<0.026						1	µg/L		<0.26		1
3B. Anthracene (120-12-7)	☒	☐	☐	<0.006						1	µg/L		<0.006		1
4B. Benzidine (92-87-5)	☒	☐	☐	<9.7						1	µg/L		<9.7		1

Facility ID. Number: FL0002208 Outfall No. D-001 POD

1. Pollutant and CAS No. (if available)	2. Mark "X"			3. Effluent							4. Units		5. Intake (optional)		
	a. testing required	b. believed present	c. believed absent	a. Maximum Daily Value		b. Max. 30-day Value (if available)		c. Long Term Avg. Value (if available)		d. No. of Analyses	a. Conc.	b. Mass	a. Long Term Avg. Value		b. No. of Analyses
				(1) Conc.	(2) Mass	(1) Conc.	(2) Mass	(1) Conc.	(2) Mass				(1) Conc.	(2) Mass	
5B. Benzo *(a)* Anthracene (56-55-3)	☒	☐	☐	<0.011						1	µg/L		<0.011		1
6B. Benzo *(a)* Pyrene (50-32-8)	☒	☐	☐	<0.013						1	µg/L		<0.013		1
7B. 3,4-Benzo-fluoranthene (205-99-2)	☒	☐	☐	<0.015						1	µg/L		<0.015		1
8B. Benzo *(ghi)* Perylene (191-24-2)	☒	☐	☐	<0.014						1	µg/L		<0.014		1
9B. Benzo *(k)* Fluoranthene (207-08-9)	☒	☐	☐	<0.012						1	µg/L		<0.012		1
10B. Bis *(2-Chloroethoxy)* Methane (111-91-1)	☒	☐	☐	<0.32						1	µg/L		<0.32		1
11B. Bis *(2-chloroethyl)* Ether (111-44-4)	☒	☐	☐	<0.46						1	µg/L		<0.46		1
12B. Bis *(2-Chloroisopropyl)* Ether (102-60-1)	☒	☐	☐	<0.34						1	µg/L		<0.34		1
13B. Bis *(2-Ethylhexyl)* Phthalate (117-81-7)	☒	☐	☐	0.2						1	µg/L		<0.2		1
14B. 4-Bromophenyl Phenyl Ether (101-55-3)	☒	☐	☐	<0.27						1	µg/L		<0.27		1
15B Butyl Benzyl Phthalate (84-68-7)	☒	☐	☐	<0.36						1	µg/L		<0.36		1
16B. 2-Chloronaphthalene (91-58-7)	☒	☐	☐	<0.32						1	µg/L		<0.32		1
17B. 4-Chlorophenyl Phenyl Ether (7005-72-3)	☒	☐	☐	<0.45						1	µg/L		<0.45		1
18B. Chrysene (218-01-9)	☒	☐	☐	<0.017						1	µg/L		<0.017		1
19B. Dibenzo *(a,h)* Anthracene (53-70-3)	☒	☐	☐	<0.006						1	µg/L		<0.006		1
20B. 1,2-Dichlorobenzene (95-50-1)	☒	☐	☐	<0.34						1	µg/L		<0.298		1
21B. 1,3-Dichlorobenzene (541-73-1)	☒	☐	☐	<0.35						1	µg/L		<0.235		1
22B. 1,4-Dichlorobenzene (106-46-7)	☒	☐	☐	<0.28						1	µg/L		<0.199		1
23B. 3,3'-Dichlorobenzidine (92-94-1)	☒	☐	☐	<0.31						1	µg/L		<0.31		1
24B. Diethyl Phthalate (84-66-2)	☒	☐	☐	<0.33						1	µg/L		<0.33		1
25B. Dimethyl Phthalate (131-11-3)	☒	☐	☐	<0.21						1	µg/L		<0.21		1
26B. Di-N-Butyl Phthalate (84-74-2)	☒	☐	☐	<0.28						1	µg/L		<0.28		1
27B. 2,4-Dinitrotoluene (121-14-2)	☒	☐	☐	<0.31						1	µg/L		<0.31		1
28B. 2,6-Dinitrotoluene (606-20-2)	☒	☐	☐	<0.31						1	µg/L		<0.31		1

Facility ID. Number: FL0002208 Outfall No. D-001 POD

1. Pollutant and CAS No. (if available)	2. Mark "X"			3. Effluent							4. Units		5. Intake (optional)		
	a. testing required	b. believed present	c. believed absent	a. Maximum Daily Value		b. Max. 30-day Value (if available)		c. Long Term Avg. Value (if available)		d. No. of Analyses	a. Conc.	b. Mass	a. Long Term Avg. Value		b. No. of Analyses
				(1) Conc.	(2) Mass	(1) Conc.	(2) Mass	(1) Conc.	(2) Mass				(1) Conc.	(2) Mass	
29B. Di-N-Octyl Phthalate (117-84-0)	☒	☐	☐	<0.28						1	µg/L		<0.28		1
30B. 1,2-Diphenylhydrazine *(as Azobenzene)* (122-66-7)	☒	☐	☐	<0.23						1	µg/L		<0.23		1
31B. Fluoranthene (206-44-0)	☒	☐	☐	<0.008						1	µg/L		<0.008		1
32B. Fluorene (86-73-7)	☒	☐	☐	<0.011						1	µg/L		<0.011		1
33B. Hexachlorobenzene (118-74-1)	☒	☐	☐	<0.32						1	µg/L		<0.32		1
34B. Hexachlorobutadiene (87-68-3)	☒	☐	☐	<0.45						1	µg/L		<0.45		1
35B. Hexachlorocyclopentadiene (77-47-4)	☒	☐	☐	<0.7						1	µg/L		<0.7		1
36B. Hexachloroethane (67-72-1)	☒	☐	☐	<0.36						1	µg/L		<0.36		1
37B. Indeno *(1,2,3-cd)* Pyrene (193-39-5)	☒	☐	☐	<0.011						1	µg/L		<0.011		1
38B. Isophorone (78-59-1)	☒	☐	☐	<0.34						1	µg/L		<0.34		1
39B. Naphthalene (91-20-3)	☒	☐	☐	<0.034						1	µg/L		<0.034		1
40B. Nitrobenzene (98-95-9)	☒	☐	☐	<0.31						1	µg/L		<0.31		1
41B N-Nitrosodimethylamine (62-75-9)	☒	☐	☐	<0.33						1	µg/L		<0.33		1
42B. N-Nitrosodi-N-Propylamine (621-64-7)	☐	☐	☒												1
43B. N-Nitro-sodiphenylamine (86-30-6)	☒	☐	☐	<0.001						1	µg/L		<0.001		1
44B Phenanthrene (85-01-8)	☒	☐	☐	<0.014						1	µg/L		<0.014		1
45B. Pyrene (129-00-0)	☒	☐	☐	<0.008						1	µg/L		<0.008		1
46B. 1,2,4-Trichlorobenzene (120-82-1)	☒	☐	☐	<1.5						1	µg/L		<1.5		1
PESTICIDES (GC/MS)															
1P. Aldrin (309-00-2)	☐	☐	☒												
2P. -BHC (319-84-6)	☐	☐	☒												
3P -BHC (319-85-7)	☐	☐	☒												
4P. -BHC (58-89-9)	☐	☐	☒												
5P. -BHC (319-86-8)	☐	☐	☒												

Facility ID. Number: FL0002208 Outfall No. D-001 POD

1. Pollutant and CAS No. (if available)	2. Mark "X"			3. Effluent							4. Units		5. Intake (optional)		
	a. testing required	b. believed present	c. believed absent	a. Maximum Daily Value		b. Max. 30-day Value (if available)		c. Long Term Avg. Value (if available)		d. No. of Analyses	a. Conc.	b. Mass	a. Long Term Avg. Value		b. No. of Analyses
				(1) Conc.	(2) Mass	(1) Conc.	(2) Mass	(1) Conc.	(2) Mass				(1) Conc.	(2) Mass	
6P. Chlordane (57-74-9)	☐	☐	☒												
7P. 4,4'-DDT (50-29-3)	☐	☐	☒												
8P. 4,4'-DDE (72-55-9)	☐	☐	☒												
9P. 4,4'-DDD (72-54-8)	☐	☐	☒												
10P. Dieldrin (60-57-1)	☐	☐	☒												
11P. -Endosulfan (115-29-7)	☐	☐	☒												
12P. -Endosulfan (115-29-7)	☐	☐	☒												
13P. Endosulfan Sulfate (1031-07-8)	☐	☐	☒												
14P. Endrin (72-20-8)	☐	☐	☒												
15P. Endrin Aldehyde (7421-92-4)	☐	☐	☒												
16P. Heptachlor (76-44-8)	☐	☐	☒												
17P. Heptachlor Epoxide (1024-57-3)	☐	☐	☒												
18P. PCB-1242 (53469-21-9)	☐	☐	☒												
19P. PCB-1254 (11097-69-1)	☐	☐	☒												
20P. PCB-1221 (11104-28-2)	☐	☐	☒												
21P. PCB-1232 (11141-16-5)	☐	☐	☒												
22P. PCB-1248 (12672-29-6)	☐	☐	☒												
23P. PCB-1260 (11096-82-5)	☐	☐	☒												
24P. PCB-1016 (12674-11-2)	☐	☐	☒												
25P. Toxaphene (8001-35-2)	☐	☐	☒												

Facility ID. Number: FL0002208 Outfall No. I-003

PLEASE PRINT OR TYPE ONLY: You may report some or all of this information on separate sheets instead of completing these pages. Use the same format. SEE INSTRUCTIONS.

VII. INTAKE AND EFFLUENT CHARACTERISTICS

PART A - You must provide the results of at least one analysis for every pollutant in this table. Complete one table for each outfall. See instructions for additional details.

1. Pollutant	2. Effluent							3.. Units		4. Intake (optional)		
	a. Max. Daily Value		b. Max. 30-day Value		c. Annual Avg. Value		d. No. of Analyses	a. Concentration	b. Mass	a. Long Term Avg. Value		b. No. of Analyses
	(1) Conc.	(2) Mass	(1) Conc.	(2) Mass	(1) Conc.	(2) Mass				(1) Conc.	(2) Mass	
a Carbonaceous Biochemical Oxygen Demand (CBOD)	<2.0						1	mg/L				
b. Chemical Oxygen Demand (COD)	<6.5						1	mg/L				
c. Total Organic Carbon (TOC)	1.75						1	mg/L				
d. Total Suspended Solids (TSS)	5.2		<3		<3		74	mg/L				
e. Total Nitrogen (as N)	<0.05						1	mg/L				
f. Total Phosphorus (as P)	0.041						1	mg/L				
g. Ammonia (as N)	0.036							mg/L				
h. Flow - actual or projected	Value 0.0360		Value 0.0280		Value 0.0234		730	MGD		Value		
i. Flow - design	Value		Value		Value					Value		
j. Specific Conductivity	Value 5.2		Value		Value		1	µS/cm		Value		
k. Temperature (winter)	Value		Value		Value			°C		Value		
l. Temperature (summer)	Value 26		Value 26		Value		1	°C		Value		
m. . pH	Min. 6.5	Max 6.5	Min.	Max.			1	STANDARD UNITS				

PART B - Mark "X" in column 2a for each pollutant you know or have reason to believe is present. Mark "X" in column 2b for each pollutant you believe to be absent. If you mark column 2a for any pollutant which is limited either directly, or indirectly but expressly, in an effluent limitations guideline, you must provide the results of at least one analysis for that pollutant. For other pollutants for which you mark column 2a, you must provide quantitative data or an explanation of their presence in your discharge. Complete one table for each outfall. See the instructions for additonal details and requirements.

1. Pollutant and CAS No. (if available)	2. Mark "X"		3. Effluent							4. Units		5. Intake (optional)		
	a. believed present	b. believed absent	a. Maximum Daily Value		b. Max. 30-day Value (if available)		c. Long Term Avg. Value (if available)		d. No. of Analyses	a. Conc.	b. Mass	a. Long Term Avg. Value		b. No. of Analyses
			(1) Conc...	(2) Mass	(1) Conc.	(2) Mass	(1) Conc.	(2) Mass				(1) Conc.	(2) Mass	
a. Bromide (24949-67-9)	☐	☒												
b. Chlorine, Total Residual	☐	☒												
c. Color	☒	☐	<5						1	CU				
d. Fecal Coliform	☐	☒												
e. Fluoride (16984-48-8)	☐	☒												
f. Nitrate-Nitrite (as N)	☒	☐	<0.05						1	mg/L				

: Item VII-B Contd.

Facility ID. Number FL0002208 Outfall No. I-003

1. Pollutant and CAS No. (if available)	2. Mark "X"		3. Effuent							4. Units		5. Intake (optional)		
	a. believed present	b. believed absent	a. Maximum Daily Value		b. Max. 30-day Value (if available)		c. Long Term Avg. Value (if available)		d. No. of Analyses	a. Conc.	b. Mass	a. Long Term Avg. Value		b. No. of Analyses
			(1) Conc.	(2) Mass	(1) Conc.	(2) Mass	(1) Conc.	(2) Mass				(1) Conc.	(2) Mass	
g. Nitrogen, Total Organic (as N)	☒	☐	<0.17						1	mg/L				
h. Oil and grease	☒	☐	11.4						1	mg/L				
i. Phosphorus, Total (as P) (7723-14-0)	☒	☐	0.041						1	mg/L				
j. Radioactivity														
(1) Alpha, Total	☒	☐	<0.0367±1.53						1	pCi/L				
(2) Beta, Total	☒	☐	765±16.7						1	pCi/L				
(3) Radium, Total	☐	☒												
(4) Radium 226, Total	☐	☒												
k. Sulfate (as SO_4) (14808-79-8)	☒	☐	0.39						1	mg/L				
l. Sulfide (as S)	☐	☒												
m. Sulfite (as SO_3) (14265-45-3)	☐	☒												
n. Surfactants	☒	☐	0.0219						1	mg/L				
o. Aluminum, Total (7429-90-5)	☐	☒												
p. Barium, Total (7440-39-3)	☐	☒												
q. Boron, Total (7440-42-8)	☒	☐	199						1	mg/L				
r. Cobalt, Total (7440-48-4)	☐	☒												
s. Iron, Total (7439-89-6)	☒	☐	45.6						1	µg/L				
t. Maagnesium, Total (7439-95-4)	☒	☐	<85						1	µg/L				
u. Molybdenum, Total (7439-98-7)	☒	☐	3.96						1	µg/L				
v. Manganese, Total (7439-96-5)	☐	☒												
w. Tin, Total (7440-31-5)	☐	☒												
x. Titanium, Total (7440-32-6)	☐	☒												

Facility ID. Number: FL0002208 Outfall No. I-003

PART C - If you are a primary industry and this outfall contains process wastewater, refer to Table 2c-2 in the instructions to determine which of the GC/MS fractions you must test for. Mark "X" in column 2a for all GC/MS fractions that apply to your industry and for ALL toxic metals, cyanides, and total phenols. If you are not required to mark column 2a (secondary industries, non-process wastewater outfalls, and non-required GC/MS fractions), mark "X" in column 2b for each pollutant you know or have reason to believe is present. Mark "X" in column 2c for each pollutant you believe is absent. If you mark column 2a for any pollutant, you must provide the results of at least one analysis for that pollutant. If you mark column 2b for any pollutant, you must provide the results of at least one anlysis for that pollutnat if you know or have reason to believe it will be discharged in concentrations of 10 ppb or greater. If you mark column 2b for acrolein, acrylonitrile, 2,4,dinitrophenol, or 2-methyl-4,6 dinitrophenol, you must provide the results of at least one analysis for each of these pollutants which you know or have reason to believe that you discharge in concentrations of 100 ppb or greater. Otherwise, for pollutants for which you mark column2b, you must either submit at least one analysis or briefly describe the reasons the pollutant is expected to be discharged. Note that there are 7 pages to this part; please review each carefully. Complete one table (all 7 pages) for each outfall. See instructions for additional details and requirements.

1. Pollutant and CAS No. (if available)	2. Mark "X"			3. Effluent							4. Units		5. Intake (optional)		
	a. testing required	b. believed present	c. believed absent	a. Maximum Daily Value		b. Max. 30-day Value (if available)		c. Long Term Avg. Value (if available)		d. No. of Analyses	a. Conc.	b. Mass	a. Long Term Avg. Value		b. No. of Analyses
				(1) Conc.	(2) Mass	(1) Conc.	(2) Mass	(1) Conc.	(2) Mass				(1) Conc.	(2) Mass	
METALS, CYANIDE, AND TOTAL PHENOLS															
1M. Antimony, Total (7440-36-0)	☒	☐	☐	13.1						1	µg/L				
2M. Arsenic, Total (7723-14-0)	☒	☐	☐	20.3						1	µg/L				
3M. Beryllium, Total (7440-41-7)	☒	☐	☐	<1.0						1	µg/L				
4M. Cadmium, Total (7440-43-9)	☒	☐	☐	1.02						1	µg/L				
5M. Chromium, Total (7440-47-3)	☒	☐	☐	2.56						1	µg/L				
6M. Copper, Total (7440-50-8)	☒	☐	☐	<3.0						1	µg/L				
7M. Lead, Total (7439-92-1)	☒	☐	☐	<3.3						1	µg/L				
8M. Mercury, Total (7439-97-6)	☒	☐	☐	<0.066						1	µg/L				
9M. Nickel, Total (7440-02-0)	☒	☐	☐	<1.5						1	µg/L				
10M. Selenium, Total (7782-49-2)	☒	☐	☐	<5.0						1	µg/L				
11M. Silver, Total (7440-22-4)	☒	☐	☐	<1.0						1	µg/L				
12M. Thallium, Total (7440-28-0)	☒	☐	☐	7.06						1	µg/L				
13M. Zinc, Total (7440-66-6)	☒	☐	☐	<3.3						1	µg/L				
14M. Cyanide, Total (57-12-5)	☒	☐	☐	<1.7						1	µg/L				
15M. Phenols, Total	☒	☐	☐	6.26						1	µg/L				
DIOXIN															
2,3,7,8-Tetra-chlorodibenzo-P-Dioxin (1764-01-6)	☐	☐	☒												
GC/MS FRACTIONS - VOLATILE COMPOUNDS															
1V. Acrolein (107-02-8)	☒	☐	☐	<1.25						1	µg/L				
2V. Acrylonitrile (107-13-1)	☒	☐	☐	<1.00						1	µg/L				

Facility ID. Number: FL0002208 Outfall No. I-003

1. Pollutant and CAS No. (if available)	2. Mark "X"			3. Effluent							4. Units		5. Intake (optional)		
	a. testing required	b. believed present	c. believed absent	a. Maximum Daily Value		b. Max. 30-day Value (if available)		c. Long Term Avg. Value (if available)		d. No. of Analyses	a. Conc.	b. Mass	a. Long Term Avg. Value		b. No. of Analyses
				(1) Conc.	(2) Mass	(1) Conc.	(2) Mass	(1) Conc.	(2) Mass				(1) Conc.	(2) Mass	
GC/MS FRACTION - VOLATILE COMPOUNDS (continued)															
3V. Benzene (71-43-2)	☒	☐	☐	<0.300						1	µg/L				
4V. Bis (Chloromethyl) Ether (542-88-1)	☐	☐	☒												
5V. Bromoform (75-25-2)	☒	☐	☐	<0.250						1	µg/L				
6V. Carbon Tetrachloride (56-23-5)	☒	☐	☐	<0.300						1	µg/L				
7V Chlorobenzene (108-90-7)	☒	☐	☐	<0.250						1	µg/L				
8V. Chlorodi-bromomethane (124-8-1)	☒	☐	☐	<0.300						1	µg/L				
9V. Chloroethane (74-00-3)	☒	☐	☐	<0.300						1	µg/L				
10V. 2-Chloro-ethylvinyl Ether (110-75-8)	☒	☐	☐	<1.50						1	µg/L				
11V. Chloroform (67-86-3)	☒	☐	☐	<0.250						1	µg/L				
12V. Dichloro-bromomethane (75-24-4)	☒	☐	☐	<0.250						1	µg/L				
13V. Dichloro-difluoromethane (75-71-8)	☐	☐	☒												
14V. 1,1-Dichloroethane (75-34-3)	☒	☐	☐	<0.300						1	µg/L				
15V. 1,2-Dichloroethane (107-06-2)	☒	☐	☐	<0.250						1	µg/L				
16V. 1,1-Dichloroethylene (75-35-4)	☒	☐	☐	<0.300						1	µg/L				
17V. 1,2,-Dichloropropane (78-87-5)	☒	☐	☐	<0.250						1	µg/L				
18V. 1,3-Dichloropropylene (542-75-6)	☒	☐	☐	<0.250						1	µg/L				
19V. Ethylbenzene (100-41-4)	☒	☐	☐	<0.250						1	µg/L				
20V. Methyl Bromide (74-83-9)	☒	☐	☐	<0.300						1	µg/L				
21V. Methyl Chloride (74-87-3)	☒	☐	☐	<0.300						1	µg/L				
22V. Methylene Chloride (74-98-2)	☒	☐	☐	<2.0						1	µg/L				
23V. 1,1,2,2-Tetra-chloroethane (79-34-5)	☒	☐	☐	<0.250						1	µg/L				
24V. Tetrachloroethylene (127-18-4)	☒	☐	☐	<0.300						1	µg/L				

Facility ID. Number: FL0002208 Outfall No. I-003

1. Pollutant and CAS No. (if available)	2. Mark "X"			3. Effluent							4. Units		5. Intake (optional)		
	a. testing required	b. believed present	c. believed absent	a. Maximum Daily Value		b. Max. 30-day Value (if available)		c. Long Term Avg. Value (if available)		d. No. of Analyses	a. Conc.	b. Mass	a. Long Term Avg. Value		b. No. of Analyses
				(1) Conc.	(2) Mass	(1) Conc.	(2) Mass	(1) Conc.	(2) Mass				(1) Conc.	(2) Mass	
GC/MS FRACTION - VOLATILE COMPOUNDS (continued)															
25V. Toluene (108-88-3)	☒	☐	☐	<0.250						1	µg/L				
26V. 1,2-Trans-Dichloroethylene (156-60-5)	☒	☐	☐	<0.300						1	µg/L				
27V. 1,1,2-Trichloroethane (71-55-6)	☒	☐	☐	<0.325						1	µg/L				
28V. 1,1,2-Trichloroethane (79-00-5)	☒	☐	☐	<0.250						1	µg/L				
29V. Trichloroethylene (79-01-6)	☒	☐	☐	<0.250						1	µg/L				
30V. Trichloro-fluoromethane (75-69-4)	☐	☐	☒												
31V. Vinyl Chloride (75-01-4)	☒	☐	☐	<0.500						1	µg/L				
GC/MS FRACTION - ACID COMPOUNDS															
1A. 2-Chlorophenol (95-57-8)	☒	☐	☐	<1.89						1	µg/L				
2A. 2,4-Dichlorophenol (120-83-2)	☒	☐	☐	<1.89						1	µg/L				
3A. 2,4-Dimethylphenol (105-67-9)	☒	☐	☐	<1.89						1	µg/L				
4A. 4,6-Dinitro-O-Cresol (534-53-1)	☒	☐	☐	<2.83						1	µg/L				
5A. 2,4-Dinitrophenol (51-28-5)	☒	☐	☐	<4.72						1	µg/L				
6A. 2-Nitrophenol (88-75-5)	☒	☐	☐	<1.89						1	µg/L				
7A. 4-Nitrophenol (100-02-7)	☒	☐	☐	<1.89						1	µg/L				
8A P-Chloro-M-Cresol (59-50-7)	☒	☐	☐	<1.89						1	µg/L				
9A Pentachlorophenol (87-86-5)	☒	☐	☐	<1.89						1	µg/L				
10A Phenol (108-95-2)	☒	☐	☐	<0.943						1	µg/L				
11A 2,4,5-Trichloro-phenol (88-06-2)	☒	☐	☐	<1.89						1	µg/L				
GC/MS FRACTION - BASE/NEUTRAL COMPOUNDS															
1B. Acenaphthene (63-32-9)	☒	☐	☐	<0.292						1	µg/L				
2B. Acenaphtylene (208-96-8)	☒	☐	☐	<0.189						1	µg/L				
3B. Anthracene (120-12-7)	☒	☐	☐	<0.189						1	µg/L				
4B. Benzidine (92-87-5)	☐	☐	☒												

Facility ID. Number: FL0002208 Outfall No. I-003

1. Pollutant and CAS No. (if available)	2. Mark "X"			3. Effluent							4. Units		5. Intake (optional)		
	a. testing required	b. believed present	c. believed absent	a. Maximum Daily Value		b. Max. 30-day Value (if available)		c. Long Term Avg. Value (if available)		d. No. of Analyses	a. Conc.	b. Mass	a. Long Term Avg. Value		b. No. of Analyses
				(1) Conc.	(2) Mass	(1) Conc.	(2) Mass	(1) Conc.	(2) Mass				(1) Conc.	(2) Mass	
5B. Benzo *(a)* Anthracene (56-55-3)	☒	☐	☐	<0.189						1	µg/L				
6B. Benzo *(a)* Pyrene (50-32-8)	☒	☐	☐	<0.189						1	µg/L				
7B. 3,4-Benzo-fluoranthene (205-99-2)	☒	☐	☐	<0.189						1	µg/L				
8B. Benzo *(ghi)* Perylene (191-24-2)	☒	☐	☐	<0.189						1	µg/L				
9B. Benzo *(k)* Fluoranthene (207-08-9)	☒	☐	☐	<0.189						1	µg/L				
10B. Bis *(2-Chloroethoxy)* Methane (111-91-1)	☒	☐	☐	<2.83						1	µg/L				
11B. Bis *(2-chloroethyl)* Ether (111-44-4)	☒	☐	☐	<1.89						1	µg/L				
12B. Bis *(2-Chloroisopropyl)* Ether (102-60-1)	☒	☐	☐	<1.89						1	µg/L				
13B. Bis *(2-Ethylhexyl)* Phthalate (117-81-7)	☒	☐	☐	<1.89						1	µg/L				
14B. 4-Bromophenyl Phenyl Ether (101-55-3)	☒	☐	☐	<1.89						1	µg/L				
15B Butyl Benzyl Phthalate (84-68-7)	☒	☐	☐	<1.89						1	µg/L				
16B. 2-Chloronaphthalene (91-58-7)	☒	☐	☐	<0.283						1	µg/L				
17B. 4-Chlorophenyl Phenyl Ether (7005-72-3)	☒	☐	☐	<1.89						1	µg/L				
18B. Chrysene (218-01-9)	☒	☐	☐	<0.189						1	µg/L				
19B. Dibenzo *(a,h)* Anthracene (53-70-3)	☒	☐	☐	<0.189						1	µg/L				
20B. 1,2-Dichlorobenzene (95-50-1)	☒	☐	☐	<1.89						1	µg/L				
21B. 1,3-Dichlorobenzene (541-73-1)	☒	☐	☐	<1.89						1	µg/L				
22B. 1,4-Dichlorobenzene (106-46-7)	☒	☐	☐	<1.89						1	µg/L				
23B. 3,3'-Dichlorobenzidine (92-94-1)	☒	☐	☐	<1.89						1	µg/L				
24B. Diethyl Phthalate (84-66-2)	☒	☐	☐	<1.89						1	µg/L				
25B. Dimethyl Phthalate (131-11-3)	☒	☐	☐	<1.89						1	µg/L				
26B. Di-N-Butyl Phthalate (84-74-2)	☒	☐	☐	<1.89						1	µg/L				
27B. 2,4-Dinitrotoluene (121-14-2)	☒	☐	☐	<1.89						1	µg/L				
28B. 2,6-Dinitrotoluene (606-20-2)	☒	☐	☐	<1.89						1	µg/L				

Facility ID. Number: FL0002208 Outfall No. I-003

1. Pollutant and CAS No. (if available)	2. Mark "X"			3. Effluent							4. Units		5. Intake (optional)		
	a. testing required	b. believed present	c. believed absent	a. Maximum Daily Value		b. Max. 30-day Value (if available)		c. Long Term Avg. Value (if available)		d. No. of Analyses	a. Conc.	b. Mass	a. Long Term Avg. Value		b. No. of Analyses
				(1) Conc.	(2) Mass	(1) Conc.	(2) Mass	(1) Conc.	(2) Mass				(1) Conc.	(2) Mass	
29B. Di-N-Octyl Phthalate (117-84-0)	☒	☐	☐	<2.83						1	µg/L				
30B. 1,2-Diphenylhydrazine *(as Azobenzene)* (122-66-7)	☐	☐	☒												
31B. Fluoranthene (206-44-0)	☒	☐	☐	<0.189						1	µg/L				
32B. Fluorene (86-73-7)	☒	☐	☐	<0.189						1	µg/L				
33B. Hexachlorobenzene (118-74-1)	☒	☐	☐	<1.89						1	µg/L				
34B. Hexachlorobutadiene (87-68-3)	☒	☐	☐	<1.89						1	µg/L				
35B. Hexachlorocyclopentadiene (77-47-4)	☐	☐	☒												
36B. Hexachloroethane (67-72-1)	☒	☐	☐	<1.89						1	µg/L				
37B. Indeno *(1,2,3-cd)* Pyrene (193-39-5)	☒	☐	☐	<0.189						1	µg/L				
38B. Isophorone (78-59-1)	☒	☐	☐	<2.83						1	µg/L				
39B. Naphthalene (91-20-3)	☒	☐	☐	<0.283						1	µg/L				
40B. Nitrobenzene (98-95-9)	☒	☐	☐	<2.83						1	µg/L				
41B N-Nitrosodimethylamine (62-75-9)	☐	☐	☒												
42B. N-Nitrosodi-N-Propylamine (621-64-7)	☒	☐	☐	<1.89						1	µg/L				
43B. N-Nitrosodiphenylamine (86-30-6)	☐	☐	☒												
44B Phenanthrene (85-01-8)	☒	☐	☐	<0.189						1	µg/L				
45B. Pyrene (129-00-0)	☒	☐	☐	<0.283						1	µg/L				
46B. 1,2,4-Trichlorobenzene (120-82-1)	☒	☐	☐	<1.89						1	µg/L				
[illegible]															
1P. Aldrin (309-00-2)	☐	☐	☒												
2P. -BHC (319-84-6)	☐	☐	☒												
3P -BHC (319-85-7)	☐	☐	☒												
4P. -BHC (58-89-9)	☐	☐	☒												
5P. -BHC (319-86-8)	☐	☐	☒												

Facility ID. Number: FL0002208 Outfall No. I-003

1. Pollutant and CAS No. (if available)	2. Mark "X"			3. Effluent							4. Units		5. Intake (optional)		
	a. testing required	b. believed present	c. believed absent	a. Maximum Daily Value		b. Max. 30-day Value (if available)		c. Long Term Avg. Value (if available)		d. No. of Analyses	a. Conc.	b. Mass	a. Long Term Avg. Value		b. No. of Analyses
				(1) Conc.	(2) Mass	(1) Conc.	(2) Mass	(1) Conc.	(2) Mass				(1) Conc.	(2) Mass	
6P. Chlordane (57-74-9)	☐	☐	☒												
7P. 4,4'-DDT (50-29-3)	☐	☐	☒												
8P. 4,4'-DDE (72-55-9)	☐	☐	☒												
9P. 4,4'-DDD (72-54-8)	☐	☐	☒												
10P. Dieldrin (60-57-1)	☐	☐	☒												
11P. -Endosulfan (115-29-7)	☐	☐	☒												
12P. -Endosulfan (115-29-7)	☐	☐	☒												
13P. Endosulfan Sulfate (1031-07-8)	☐	☐	☒												
14P. Endrin (72-20-8)	☐	☐	☒												
15P. Endrin Aldehyde (7421-92-4)	☐	☐	☒												
16P. Heptachlor (76-44-8)	☐	☐	☒												
17P. Heptachlor Epoxide (1024-57-3)	☐	☐	☒												
18P. PCB-1242 (53469-21-9)	☐	☐	☒												
19P. PCB-1254 (11097-69-1)	☐	☐	☒												
20P. PCB-1221 (11104-28-2)	☐	☐	☒												
21P. PCB-1232 (11141-16-5)	☐	☐	☒												
22P. PCB-1248 (12672-29-6)	☐	☐	☒												
23P. PCB-1260 (11096-82-5)	☐	☐	☒												
24P. PCB-1016 (12674-11-2)	☐	☐	☒												
25P. Toxaphene (8001-35-2)	☐	☐	☒												

Facility ID. Number: FL0002208 Outfall No. I-005

PLEASE PRINT OR TYPE ONLY: You may report some or all of this information on separate sheets instead of completing these pages. Use the same format. SEE INSTRUCTIONS.

VII. INTAKE AND EFFLUENT CHARACTERISTICS

PART A - You must provide the results of at least one analysis for every pollutant in this table. Complete one table for each outfall. See instructions for additional details.

1. Pollutant	2. Effluent							3.. Units		4. Intake (optional)		
	a. Max. Daily Value		b. Max. 30-day Value		c. Annual Avg. Value		d. No. of Analyses	a. Concentration	b. Mass	a. Long Term Avg. Value		b. No. of Analyses
	(1) Conc.	(2) Mass	(1) Conc.	(2) Mass	(1) Conc.	(2) Mass				(1) Conc.	(2) Mass	
a Carbonaceous Biochemical Oxygen Demand (CBOD)	7.4						1	mg/L				
b. Chemical Oxygen Demand (COD)	18.5							mg/L				
c. Total Organic Carbon (TOC)								mg/L				
d. Total Suspended Solids (TSS)	5.0		<3.0		<3.0		24	mg/L				
e. Total Nitrogen (as N)												
f Total Phosphorus (as P)	0.0216						1	mg/L				
g. Ammonia (as N)	1.61						1	mg/L				
h. Flow - actual or projected	Value 0.3492		Value 0.2722		Value 0.1544		730	MGD		Value		
i. Flow - design	Value		Value		Value					Value		
j. Specific Conductivity	Value 15.2		Value		Value		1	µS/cm		Value		
k. Temperature (winter)	Value		Value		Value			°C		Value		
l. Temperature (summer)	Value 25.5		Value 25.5		Value		1	°C		Value		
m. . pH	Min. 9.8	Max 9.8	Min.	Max.			1	STANDARD UNITS				

PART B - Mark "X" in column 2a for each pollutant you know or have reason to believe is present. Mark "X" in column 2b for each pollutant you believe to be absent. If you mark column 2a for any pollutant which is limited either directly, or indirectly but expressly, in an effluent limitations guideline, you must provide the results of at least one analysis for that pollutant. For other pollutants for which you mark column 2a, you must provide quantitative data or an explanation of their presence in your discharge. Complete one table for each outfall. See the instructions for additonal details and requirements.

1. Pollutant and CAS No. (if available)	2. Mark "X"		3. Effluent							4. Units		5. Intake (optional)		
	a. believed present	b. believed absent	a. Maximum Daily Value		b. Max. 30-day Value (if available)		c. Long Term Avg. Value (if available)		d. No. of Analyses	a. Conc.	b. Mass	a. Long Term Avg. Value		b. No. of Analyses
			(1) Conc...	(2) Mass	(1) Conc.	(2) Mass	(1) Conc.	(2) Mass				(1) Conc.	(2) Mass	
a. Bromide (24949-67-9)	☐	☒												
b. Chlorine, Total Residual	☐	☒												
c. Color	☐	☒												
d. Fecal Coliform	☐	☒												
e. Fluoride (16984-48-8)	☐	☒												
f. Nitrate-Nitrite (as N)	☐	☒												

: Item VII-B Contd.

Facility ID. Number FL0002208 Outfall No. I-005

1. Pollutant and CAS No. (if available)	2. Mark "X"		3. Effluent							4. Units		5. Intake (optional)		
	a. believed present	b. believed absent	a. Maximum Daily Value		b. Max. 30-day Value (if available)		c. Long Term Avg. Value (if available)		d. No. of Analyses	a. Conc.	b. Mass	a. Long Term Avg. Value		b. No. of Analyses
			(1) Conc.	(2) Mass	(1) Conc.	(2) Mass	(1) Conc.	(2) Mass				(1) Conc.	(2) Mass	
g. Nitrogen, Total Organic (as N)	☐	☒												
h. Oil and grease	☒	☐	<1.4		<1.4		<1.4		24	mg/L				
i. Phosphorus, Total (as P) (7723-14-0)	☒	☐	0.0216						1	mg/L				
j. Radioactivity														
(1) Alpha, Total	☒	☐	<2.28						1	pci/L				
(2) Beta, Total	☒	☐	<3.58						1	pci/L				
(3) Radium, Total	☐	☒												
(4) Radium 226, Total	☐	☒												
k. Sulfate (as SO_4) (14808-79-8)	☐	☒												
l. Sulfide (as S)	☐	☒												
m. Sulfite (as SO_3) (14265-45-3)	☐	☒												
n. Surfactants	☐	☒												
o. Aluminum, Total (7429-90-5)	☐	☒												
p. Barium, Total (7440-39-3)	☐	☒												
q. Boron, Total (7440-42-8)	☒	☐	0.017						1	mg/L				
r. Cobalt, Total (7440-48-4)	☐	☒												
s. Iron, Total (7439-89-6)	☒	☐	<45						1	µg/L				
t. Maagnesium, Total (7439-95-4)	☒	☐	<0.045						1	mg/L				
u. Molybdenum, Total (7439-98-7)	☒	☐	3.79						1	µg/L				
v. Manganese, Total (7439-96-5)	☐	☒												
w. Tin, Total (7440-31-5)	☒	☐	<0.004						1	mg/L				
x. Titanium, Total (7440-32-6)	☒	☐	<6.1						1	µg/L				

Facility ID. Number: FL0002208 Outfall No. I-005

PART C - If you are a primary industry and this outfall contains process wastewater, refer to Table 2c-2 in the instructions to determine which of the GC/MS fractions you must test for. Mark "X" in column 2a for all GC/MS fractions that apply to your industry and for ALL toxic metals, cyanides, and total phenols. If you are not required to mark column 2a (secondary industries, non-process wastewater outfalls, and non-required GC/MS fractions), mark "X" in column 2b for each pollutant you know or have reason to believe is present. Mark "X" in column 2c for each pollutant you believe is absent. If you mark column 2a for any pollutant, you must provide the results of at least one analysis for that pollutant. If you mark column 2b for any pollutant, you must provide the results of at least one anlysis for that pollutnat if you know or have reason to believe it will be discharged in concentrations of 10 ppb or greater. If you mark column 2b for acrolein, acrylonitrile, 2,4,dinitrophenol, or 2-methyl-4,6 dinitrophenol, you must provide the results of at least one analysis for each of these pollutants which you know or have reason to believe that you discharge in concentrations of 100 ppb or greater. Otherwise, for pollutants for which you mark column2b, you must either submit at least one analysis or briefly describe the reasons the pollutant is expected to be discharged. Note that there are 7 pages to this part; please review each carefully. Complete one table (all 7 pages) for each outfall. See instructions for additional details and requirements.

1. Pollutant and CAS No. (if available)	2. Mark "X"			3. Effluent							4. Units		5. Intake (optional)		
	a. testing required	b. believed present	c. believed absent	a. Maximum Daily Value		b. Max. 30-day Value (if available)		c. Long Term Avg. Value (if available)		d. No. of Analyses	a. Conc.	b. Mass	a. Long Term Avg. Value		b. No. of Analyses
				(1) Conc.	(2) Mass	(1) Conc.	(2) Mass	(1) Conc.	(2) Mass				(1) Conc.	(2) Mass	
METALS, CYANIDE, AND TOTAL PHENOLS															
1M. Antimony, Total (7440-36-0)	☒	☐	☐	4.96						1	µg/L				
2M. Arsenic, Total (7723-14-0)	☒	☐	☐	<4.6						1	µg/L				
3M. Beryllium, Total (7440-41-7)	☒	☐	☐	0.874						1	µg/L				
4M. Cadmium, Total (7440-43-9)	☒	☐	☐	1.64						1	µg/L				
5M. Chromium, Total (7440-47-3)	☒	☐	☐	1.64						1	µg/L				
6M. Copper, Total (7440-50-8)	☒	☐	☐	<9.6						1	µg/L				
7M. Lead, Total (7439-92-1)	☒	☐	☐	<3.1						1	µg/L				
8M. Mercury, Total (7439-97-6)	☒	☐	☐	<0.0002						1	µg/L				
9M. Nickel, Total (7440-02-0)	☒	☐	☐	<5.2						1	µg/L				
10M. Selenium, Total (7782-49-2)	☒	☐	☐	6.27						1	µg/L				
11M. Silver, Total (7440-22-4)	☒	☐	☐	2.01						1	µg/L				
12M. Thallium, Total (7440-28-0)	☒	☐	☐	1.3						1	µg/L				
13M. Zinc, Total (7440-66-6)	☒	☐	☐	<5.3						1	µg/L				
14M. Cyanide, Total (57-12-5)	☒	☐	☐	0.0017						1	mg/L				
15M. Phenols, Total	☒	☐	☐	<0.006						1	mg/L				
DIOXIN															
2,3,7,8-Tetra-chlorodibenzo-P-Dioxin (1764-01-6)	☐	☐	☒												
GC/MS FRACTION - VOLATILE COMPOUNDS															
1V. Acrolein (107-02-8)	☒	☐	☐	<3.45						1	µg/L				
2V. Acrylonitrile (107-13-1)	☒	☐	☐	<3.08						1	µg/L				

Facility ID. Number: FL0002208 Outfall No. I-005

1. Pollutant and CAS No. (if available)	2. Mark "X"			3. Effluent							4. Units		5. Intake (optional)		
	a. testing required	b. believed present	c. believed absent	a. Maximum Daily Value		b. Max. 30-day Value (if available)		c. Long Term Avg. Value (if available)		d. No. of Analyses	a. Conc.	b. Mass	a. Long Term Avg. Value		b. No. of Analyses
				(1) Conc.	(2) Mass	(1) Conc.	(2) Mass	(1) Conc.	(2) Mass				(1) Conc.	(2) Mass	
GC/MS FRACTION - VOLATILE COMPOUNDS (continued)															
3V. Benzene (71-43-2)	☒	☐	☐	<0.211						1	µg/L				
4V. Bis (Chloromethyl) Ether (542-88-1)	☐	☐	☒												
5V. Bromoform (75-25-2)	☐	☐	☐	<0.418						1	µg/L				
6V. Carbon Tetrachloride (56-23-5)	☒	☐	☐	<0.213						1	µg/L				
7V Chlorobenzene (108-90-7)	☒	☐	☐	<0.245						1	µg/L				
8V. Chlorodi-bromomethane (124-8-1)	☒	☐	☐	<0.256						1	µg/L				
9V. Chloroethane (74-00-3)	☒	☐	☐	<0.34						1	µg/L				
10V. 2-Chloro-ethylvinyl Ether (110-75-8)	☒	☐	☐	<0.612						1	µg/L				
11V. Chloroform (67-86-3)	☒	☐	☐	<0.263						1	µg/L				
12V. Dichloro-bromomethane (75-24-4)	☒	☐	☐	<0.191						1	µg/L				
13V. Dichloro-difluoromethane (75-71-8)	☒	☐	☐	<0.414						1	µg/L				
14V. 1,1-Dichloroethane (75-34-3)	☒	☐	☐	<0.255						1	µg/L				
15V. 1,2-Dichloroethane (107-06-2)	☒	☐	☐	<0.338						1	µg/L				
16V. 1,1-Dichloroethylene (75-35-4)	☒	☐	☐	<0.269						1	µg/L				
17V. 1,2,-Dichloropropane (78-87-5)	☐	☐	☐	<0.326						1	µg/L				
18V. 1,3-Dichloropropylene (542-75-6)	☒	☐	☐	<0.249						1	µg/L				
19V. Ethylbenzene (100-41-4)	☒	☐	☐	<0.196						1	µg/L				
20V. Methyl Bromide (74-83-9)	☒	☐	☐	<0.61						1	µg/L				
21V. Methyl Chloride (74-87-3)	☒	☐	☐	<0.25						1	µg/L				
22V. Methylene Chloride (74-98-2)	☒	☐	☐	<0.639						1	µg/L				
23V. 1,1,2,2-Tetra-chloroethane (79-34-5)	☒	☐	☐	<0.233						1	µg/L				
24V. Tetrachloroethylene (127-18-4)	☒	☐	☐	<0.508						1	µg/L				

Facility ID. Number: FL0002208 Outfall No. I-005

1. Pollutant and CAS No. (if available)	2. Mark "X"			3. Effluent							4. Units		5. Intake (optional)		
	a. testing required	b. believed present	c. believed absent	a. Maximum Daily Value		b. Max. 30-day Value (if available)		c. Long Term Avg. Value (if available)		d. No. of Analyses	a. Conc.	b. Mass	a. Long Term Avg. Value		b. No. of Analyses
				(1) Conc.	(2) Mass	(1) Conc.	(2) Mass	(1) Conc.	(2) Mass				(1) Conc.	(2) Mass	
GC/MS FRACTION - VOLATILE COMPOUNDS (continued)															
25V. Toluene (108-88-3)	☒	☐	☐	<0.247						1	µg/L				
26V. 1,2-Trans-Dichloroethylene (156-60-5)	☒	☐	☐	<0.399						1	µg/L				
27V. 1,1,2-Trichloroethane (71-55-6)	☒	☐	☐	<0.288						1	µg/L				
28V. 1,1,2-Trichloroethane (79-00-5)	☒	☐	☐	<0.232						1	µg/L				
29V. Trichleroethylene (79-01-6)	☒	☐	☐	<0.305						1	µg/L				
30V. Trichloro-fluoromethane (75-69-4)	☒	☐	☐	<0.301						1	µg/L				
31V. Vinyl Chloride (75-01-4)	☒	☐	☐	<0.414						1	µg/L				
GC/MS FRACTION - ACID COMPOUNDS															
1A. 2-Chlorophenol (95-57-8)	☒	☐	☐	<0.26						1	µg/L				
2A. 2,4-Dichlorophenol (120-83-2)	☒	☐	☐	<0.43						1	µg/L				
3A. 2,4-Dimethylphenol (105-67-9)	☒	☐	☐	<0.4						1	µg/L				
4A. 4,6-Dinitro-O-Cresol (534-53-1)	☒	☐	☐	<0.35						1	µg/L				
5A. 2,4-Dinitrophenol (51-28-5)	☒	☐	☐	<1.4						1	µg/L				
6A. 2-Nitrophenol (88-75-5)	☒	☐	☐	<0.24						1	µg/L				
7A. 4-Nitrophenol (100-02-7)	☒	☐	☐	<0.79						1	µg/L				
8A P-Chloro-M-Cresol (59-50-7)	☒	☐	☐	<0.22						1	µg/L				
9A Pentachlorophenol (87-86-5)	☒	☐	☐	<0.7						1	µg/L				
10A Phenol (108-95-2)	☒	☐	☐	<0.4						1	µg/L				
11A 2,4,5-Trichloro-phenol (88-06-2)	☒	☐	☐	<0.38						1	µg/L				
GC/MS FRACTION - BASE/NEUTRAL COMPOUNDS															
1B. Acenaphthene (63-32-9)	☒	☐	☐	<0.027						1	µg/L				
2B. Acenaphtylene (208-96-8)	☒	☐	☐	<0.026						1	µg/L				
3B. Anthracene (120-12-7)	☒	☐	☐	<0.006						1	µg/L				
4B. Benzidine (92-87-5)	☒	☐	☐	<9.7						1	µg/L				

Facility ID. Number: FL0002208 Outfall No. I-005

1. Pollutant and CAS No. (if available)	2. Mark "X"			3. Effluent							4. Units		5. Intake (optional)		
	a. testing required	b. believed present	c. believed absent	a. Maximum Daily Value		b. Max. 30-day Value (if available)		c. Long Term Avg. Value (if available)		d. No. of Analyses	a. Conc.	b. Mass	a. Long Term Avg. Value		b. No. of Analyses
				(1) Conc.	(2) Mass	(1) Conc.	(2) Mass	(1) Conc.	(2) Mass				(1) Conc.	(2) Mass	
5B. Benzo *(a)* Anthracene (56-55-3)	☒	☐	☐	<0.011						1	µg/L				
6B. Benzo *(a)* Pyrene (50-32-8)	☒	☐	☐	<0.013						1	µg/L				
7B. 3,4-Benzo-fluoranthene (205-99-2)	☒	☐	☐	<0.015						1	µg/L				
8B. Benzo *(ghi)* Perylene (191-24-2)	☒	☐	☐	<0.014						1	µg/L				
9B. Benzo *(k)* Fluoranthene (207-08-9)	☒	☐	☐	<0.012						1	µg/L				
10B. Bis *(2-Chloroethoxy)* Methane (111-91-1)	☒	☐	☐	<0.32						1	µg/L				
11B. Bis *(2-chloroethyl)* Ether (111-44-4)	☒	☐	☐	<0.46						1	µg/L				
12B. Bis *(2-Chloroisopropyl)* Ether (102-60-1)	☒	☐	☐	<0.34						1	µg/L				
13B. Bis *(2-Ethylhexyl)* Phthalate (117-81-7)	☒	☐	☐	<0.2						1	µg/L				
14B. 4-Bromophenyl Phenyl Ether (101-55-3)	☒	☐	☐	<0.27						1	µg/L				
15B Butyl Benzyl Phthalate (84-68-7)	☒	☐	☐	<0.36						1	µg/L				
16B. 2-Chloronaphthalene (91-58-7)	☒	☐	☐	<0.32						1	µg/L				
17B. 4-Chlorophenyl Phenyl Ether (7005-72-3)	☒	☐	☐	<0.45						1	µg/L				
18B. Chrysene (218-01-9)	☒	☐	☐	<0.017						1	µg/L				
19B. Dibenzo *(a,h)* Anthracene (53-70-3)	☒	☐	☐	<0.006						1	µg/L				
20B. 1,2-Dichlorobenzene (95-50-1)	☒	☐	☐	<0.34						1	µg/L				
21B. 1,3-Dichlorobenzene (541-73-1)	☒	☐	☐	<0.35						1	µg/L				
22B. 1,4-Dichlorobenzene (106-46-7)	☒	☐	☐	<0.28						1	µg/L				
23B. 3,3'-Dichlorobenzidine (92-94-1)	☒	☐	☐	<0.31						1	µg/L				
24B. Diethyl Phthalate (84-66-2)	☒	☐	☐	<0.33						1	µg/L				
25B. Dimethyl Phthalate (131-11-3)	☒	☐	☐	<0.21						1	µg/L				
26B. Di-N-Butyl Phthalate (84-74-2)	☒	☐	☐	<0.28						1	µg/L				
27B. 2,4-Dinitrotoluene (121-14-2)	☒	☐	☐	<0.31						1	µg/L				
28B. 2,6-Dinitrotoluene (606-20-2)	☒	☐	☐	<0.31						1	µg/L				

Facility ID. Number: FL0002208 Outfall No. I-005

1. Pollutant and CAS No. (if available)	2. Mark "X"			3. Effluent							4. Units		5. Intake (optional)		
	a. testing required	b. believed present	c. believed absent	a. Maximum Daily Value		b. Max. 30-day Value (if available)		c. Long Term Avg. Value (if available)		d. No. of Analyses	a. Conc.	b. Mass	a. Long Term Avg. Value		b. No. of Analyses
				(1) Conc.	(2) Mass	(1) Conc.	(2) Mass	(1) Conc.	(2) Mass				(1) Conc.	(2) Mass	
29B. Di-N-Octyl Phthalate (117-84-0)	☒	☐	☐	<0.28						1	µg/L				
30B. 1,2-Diphenylhydrazine *(as Azobenzene)* (122-66-7)	☒	☐	☐	<0.23						1	µg/L				
31B. Fluoranthene (206-44-0)	☒	☐	☐	<0.008						1	µg/L				
32B. Fluorene (86-73-7)	☒	☐	☐	<0.011						1	µg/L				
33B. Hexachlorobenzene (118-74-1)	☒	☐	☐	<0.32						1	µg/L				
34B. Hexachlorobutadiene (87-68-3)	☒	☐	☐	<0.45						1	µg/L				
35B. Hexachlorocyclopentadiene (77-47-4)	☒	☐	☐	<0.7						1	µg/L				
36B. Hexachloroethane (67-72-1)	☒	☐	☐	<0.36						1	µg/L				
37B. Indeno *(1,2,3-cd)* Pyrene (193-39-5)	☒	☐	☐	<0.011						1	µg/L				
38B. Isophorone (78-59-1)	☒	☐	☐	<0.34						1	µg/L				
39B. Naphthalene (91-20-3)	☒	☐	☐	<0.034						1	µg/L				
40B. Nitrobenzene (98-95-9)	☒	☐	☐	<0.31						1	µg/L				
41B N-Nitrosodimethylamine (62-75-9)	☒	☐	☐	<0.33						1	µg/L				
42B. N-Nitrosodi-N-Propylamine (621-64-7)	☐	☐	☒												
43B. N-Nitrosodiphenylamine (86-30-6)	☒	☐	☐	<0.001						1	µg/L				
44B Phenanthrene (85-01-8)	☒	☐	☐	<0.014						1	µg/L				
45B. Pyrene (129-00-0)	☒	☐	☐	<0.008						1	µg/L				
46B. 1,2,4-Trichlorobenzene (120-82-1)	☒	☐	☐	<1.5						1	µg/L				
COMMENTS AND ADDITIONAL INFORMATION															
1P. Aldrin (309-00-2)	☐	☐	☒												
2P. -BHC (319-84-6)	☐	☐	☒												
3P. -BHC (319-85-7)	☐	☐	☒												
4P. -BHC (58-89-9)	☐	☐	☒												
5P. -BHC (319-86-8)	☐	☐	☒												

Facility ID. Number: FL0002208 Outfall No. I-005

1. Pollutant and CAS No. (if available)	2. Mark "X"			3. Effluent							4. Units		5. Intake (optional)		
	a. testing required	b. believed present	c. believed absent	a. Maximum Daily Value		b. Max. 30-day Value (if available)		c. Long Term Avg. Value (if available)		d. No. of Analyses	a. Conc.	b. Mass	a. Long Term Avg. Value		b. No. of Analyses
				(1) Conc.	(2) Mass	(1) Conc.	(2) Mass	(1) Conc.	(2) Mass				(1) Conc.	(2) Mass	
6P. Chlordane (57-74-9)	☐	☐	☒												
7P. 4,4'-DDT (50-29-3)	☐	☐	☒												
8P. 4,4'-DDE (72-55-9)	☐	☐	☒												
9P. 4,4'-DDD (72-54-8)	☐	☐	☒												
10P. Dieldrin (60-57-1)	☐	☐	☒												
11P. -Endosulfan (115-29-7)	☐	☐	☒												
12P. -Endosulfan (115-29-7)	☐	☐	☒												
13P. Endosulfan Sulfate (1031-07-8)	☐	☐	☒												
14P. Endrin (72-20-8)	☐	☐	☒												
15P. Endrin Aldehyde (7421-92-4)	☐	☐	☒												
16P. Heptachlor (76-44-8)	☐	☐	☒												
17P. Heptachlor Epoxide (1024-57-3)	☐	☐	☒												
18P. PCB-1242 (53469-21-9)	☐	☐	☒												
19P. PCB-1254 (11097-69-1)	☐	☐	☒												
20P. PCB-1221 (11104-28-2)	☐	☐	☒												
21P. PCB-1232 (11141-16-5)	☐	☐	☒												
22P. PCB-1248 (12672-29-6)	☐	☐	☒												
23P. PCB-1260 (11096-82-5)	☐	☐	☒												
24P. PCB-1016 (12674-11-2)	☐	☐	☒												
25P. Toxaphene (8001-35-2)	☐	☐	☒												

Facility ID. Number: FL0002208 Outfall No. I-008, EP-ISE/S

PLEASE PRINT OR TYPE ONLY: You may report some or all of this information on separate sheets instead of completing these pages. Use the same format. SEE INSTRUCTIONS.

VII. INTAKE AND EFFLUENT CHARACTERISTICS

PART A - You must provide the results of at least one analysis for every pollutant in this table. Complete one table for each outfall. See instructions for additional details.

1. Pollutant	2. Effluent							3.. Units		4. Intake (optional)		
	a. Max. Daily Value		b. Max. 30-day Value		c. Annual Avg. Value		d. No. of Analyses	a. Concentration	b. Mass	a. Long Term Avg. Value		b. No. of Analyses
	(1) Conc.	(2) Mass	(1) Conc.	(2) Mass	(1) Conc.	(2) Mass				(1) Conc.	(2) Mass	
a Carbonaceous Biochemical Oxygen Demand (CBOD)	1.6		2.22				2	mg/L				
b. Chemical Oxygen Demand (COD)	85.3						1	mg/L				
c. Total Organic Carbon (TOC)	9.19						1	mg/L				
d. Total Suspended Solids (TSS)	4						1	mg/L				
e. Total Nitrogen (as N)	0.148						1	mg/L				
f Total Phosphorus (as P)	0.061						1	mg/L				
g. Ammonia (as N)	0.097						1	mg/L				
h. Flow - actual or projected	Value 2.16		Value 1.92		Value 1.92		2	MGD		Value		
i. Flow - design	Value		Value		Value					Value		
j. Specific Conductivity	Value 2,990		Value		Value		1	µS/cm		Value		
k. Temperature (winter)	Value		Value		Value			°C		Value		
l. Temperature (summer)	Value 26		Value 26		Value		1	°C		Value		
m. . pH	Min. 7.3	Max 7.3	Min.	Max.			1	STANDARD UNITS				

PART B - Mark "X" in column 2a for each pollutant you know or have reason to believe is present. Mark "X" in column 2b for each pollutant you believe to be absent. If you mark column 2a for any pollutant which is limited either directly, or indirectly but expressly, in an effluent limitations guideline, you must provide the results of at least one analysis for that pollutant. For other pollutants for which you mark column 2a, you must provide quantitative data or an explanation of their presence in your discharge. Complete one table for each outfall. See the instructions for additonal details and requirements.

1. Pollutant and CAS No. (if available)	2. Mark "X"		3. Effluent							4. Units		5. Intake (optional)		
	a. believed present	b. believed absent	a. Maximum Daily Value		b. Max. 30-day Value (if available)		c. Long Term Avg. Value (if available)		d. No. of Analyses	a. Conc.	b. Mass	a. Long Term Avg. Value		b. No. of Analyses
			(1) Conc...	(2) Mass	(1) Conc.	(2) Mass	(1) Conc.	(2) Mass				(1) Conc.	(2) Mass	
a. Bromide (24949-67-9)	☒	☐	5.14						1	mg/L				
b. Chlorine, Total Residual	☒	☐	<0.01						1	mg/L				
c. Color	☒	☐	30						1	CU				
d. Fecal Coliform	☒	☐	90						1	CFU				
e. Fluoride (16984-48-8)	☒	☐	0.618						1	mg/L				
f. Nitrate-Nitrite (as N)	☒	☐	<0.074						1	mg/L				

: Item VII-B Contd. Facility ID. Number FL0002208 Outfall No. I-008, EP-ISE/S

1. Pollutant and CAS No. (if available)	2. Mark "X"		3. Effluent							4. Units		5. Intake (optional)		
	a. believed present	b. believed absent	a. Maximum Daily Value		b. Max. 30-day Value (if available)		c. Long Term Avg. Value (if available)		d. No. of Analyses	a. Conc.	b. Mass	a. Long Term Avg. Value		b. No. of Analyses
			(1) Conc.	(2) Mass	(1) Conc.	(2) Mass	(1) Conc.	(2) Mass				(1) Conc.	(2) Mass	
g. Nitrogen, Total Organic (as N)	☒	☐	0.051						1	mg/L				
h. Oil and grease	☒	☐	<1.4						1	mg/L				
i. Phosphorus, Total (as P) (7723-14-0)	☒	☐	0.061						1	mg/L				
j. Radioactivity														
(1) Alpha, Total	☒	☐	<5.0 ± 4.4						1	pci/L				
(2) Beta, Total	☒	☐	34.6 ± 3.5						1	pci/L				
(3) Radium, Total	☐	☒												
(4) Radium 226, Total	☐	☒												
k. Sulfate (as SO_4) (14808-79-8)	☒	☐	144						1	mg/L				
l. Sulfide (as S)	☐	☒												
m. Sulfite (as SO_3) (14265-45-3)	☐	☒												
n. Surfactants	☒	☐	0.136						1	mg/L				
o. Aluminum, Total (7429-90-5)	☐	☒												
p. Barium, Total (7440-39-3)	☐	☒												
q. Boron, Total (7440-42-8)	☒	☐	0.281						1	mg/L				
r. Cobalt, Total (7440-48-4)	☐	☒												
s. Iron, Total (7439-89-6)	☒	☐	<0.045						1	µg/L				
t. Maagnesium, Total (7439-95-4)	☒	☐	50.6						1	mg/L				
u. Molybdenum, Total (7439-98-7)	☒	☐	0.079						1	µg/L				
v. Manganese, Total (7439-96-5)	☐	☒												
w. Tin, Total (7440-31-5)	☐	☒												
x. Titanium, Total (7440-32-6)	☒	☐	<0.006						1	mg/L				

Facility ID. Number: FL0002208 Outfall No. I-008, EP-ISE/S

PART C - If you are a primary industry and this outfall contains process wastewater, refer to Table 2c-2 in the instructions to determine which of the GC/MS fractions you must test for. Mark "X" in column 2a for all GC/MS fractions that apply to your industry and for ALL toxic metals, cyanides, and total phenols. If you are not required to mark column 2a (secondary industries, non-process wastewater outfalls, and non-required GC/MS fractions), mark "X" in column 2b for each pollutant you know or have reason to believe is present. Mark "X" in column 2c for each pollutant you believe is absent. If you mark column 2a for any pollutant, you must provide the results of at least one analysis for that pollutant. If you mark column 2b for any pollutant, you must provide the results of at least one anlysis for that pollutnat if you know or have reason to believe it will be discharged in concentrations of 10 ppb or greater. If you mark column 2b for acrolein, acrylonitrile, 2,4,dinitrophenol, or 2-methyl-4,6 dinitrophenol, you must provide the results of at least one analysis for each of these pollutants which you know or have reason to believe that you discharge in concentrations of 100 ppb or greater. Otherwise, for pollutants for which you mark column2b, you must either submit at least one analysis or briefly describe the reasons the pollutant is expected to be discharged. Note that there are 7 pages to this part; please review each carefully. Complete one table (all 7 pages) for each outfall. See instructions for additional details and requirements.

1. Pollutant and CAS No. (if available)	2. Mark "X"			3. Effluent							4. Units		5. Intake (optional)		
	a. testing required	b. believed present	c. believed absent	a. Maximum Daily Value		b. Max. 30-day Value (if available)		c. Long Term Avg. Value (if available)		d. No. of Analyses	a. Conc.	b. Mass	a. Long Term Avg. Value		b. No. of Analyses
				(1) Conc.	(2) Mass	(1) Conc.	(2) Mass	(1) Conc.	(2) Mass				(1) Conc.	(2) Mass	
METALS, CYANIDE, AND TOTAL PHENOLS															
1M. Antimony, Total (7440-36-0)	☒	☐	☐	<4						1	µg/L				
2M. Arsenic, Total (7723-14-0)	☒	☐	☐	<5						1	µg/L				
3M. Beryllium, Total (7440-41-7)	☒	☐	☐	<1						1	µg/L				
4M. Cadmium, Total (7440-43-9)	☒	☐	☐	<1						1	µg/L				
5M. Chromium, Total (7440-47-3)	☒	☐	☐	<1						1	µg/L				
6M. Copper, Total (7440-50-8)	☒	☐	☐	<10						1	µg/L				
7M. Lead, Total (7439-92-1)	☒	☐	☐	<3						1	µg/L				
8M. Mercury, Total (7439-97-6)	☒	☐	☐	<0.0002						1	µg/L				
9M. Nickel, Total (7440-02-0)	☒	☐	☐	<5						1	µg/L				
10M. Selenium, Total (7782-49-2)	☒	☐	☐	<5						1	µg/L				
11M. Silver, Total (7440-22-4)	☒	☐	☐	<2						1	µg/L				
12M. Thallium, Total (7440-28-0)	☒	☐	☐	<1						1	µg/L				
13M. Zinc, Total (7440-66-6)	☒	☐	☐	<5						1	µg/L				
14M. Cyanide, Total (57-12-5)	☒	☐	☐	1.8						1	µg/L				
15M. Phenols, Total	☒	☐	☐	<6						1	µg/L				
DIOXIN															
2,3,7,8-Tetra-chlorodibenzo-P-Dioxin (1764-01-6)	☐	☐	☒												
GC/MS FRACTION - VOLATILE COMPOUNDS															
1V. Acrolein (107-02-8)	☒	☐	☐	<2.47						1	µg/L				
2V. Acrylonitrile (107-13-1)	☒	☐	☐	<0.955						1	µg/L				

Facility ID. Number: FL0002208 Outfall No. I-008, EP-ISE/S

1. Pollutant and CAS No. (if available)	2. Mark "X"			3. Effluent							4. Units		5. Intake (optional)		
	a. testing required	b. believed present	c. believed absent	a. Maximum Daily Value		b. Max. 30-day Value (if available)		c. Long Term Avg. Value (if available)		d. No. of Analyses	a. Conc.	b. Mass	a. Long Term Avg. Value		b. No. of Analyses
				(1) Conc.	(2) Mass	(1) Conc.	(2) Mass	(1) Conc.	(2) Mass				(1) Conc.	(2) Mass	
GC/MS FRACTION - VOLATILE COMPOUNDS (continued)															
3V. Benzene (71-43-2)	☒	☐	☐	<0.173						1	µg/L				
4V. Bis (Chloromethyl) Ether (542-88-1)	☐	☐	☒												
5V. Bromoform (75-25-2)	☒	☐	☐	<0.418						1	µg/L				
6V. Carbon Tetrachloride (56-23-5)	☒	☐	☐	<0.213						1	µg/L				
7V Chlorobenzene (108-90-7)	☒	☐	☐	<0.245						1	µg/L				
8V. Chlorodi-bromomethane (124-8-1)	☒	☐	☐	<0.256						1	µg/L				
9V. Chloroethane (74-00-3)	☒	☐	☐	<0.34						1	µg/L				
10V. 2-Chloro-ethylvinyl Ether (110-75-8)	☒	☐	☐	<0.612						1	µg/L				
11V. Chloroform (67-86-3)	☒	☐	☐	<0.263						1	µg/L				
12V. Dichloro-bromomethane (75-24-4)	☒	☐	☐	<0.191						1	µg/L				
13V. Dichloro-difluoromethane (75-71-8)	☒	☐	☐	<0.414						1	µg/L				
14V. 1,1-Dichloroethane (75-34-3)	☒	☐	☐	<0.255						1	µg/L				
15V. 1,2-Dichloroethane (107-06-2)	☒	☐	☐	<0.338						1	µg/L				
16V. 1,1-Dichloroethylene (75-35-4)	☒	☐	☐	<0.269						1	µg/L				
17V. 1,2,-Dichloropropane (78-87-5)	☒	☐	☐	<0.326						1	µg/L				
18V. 1,3-Dichloropropylene (542-75-6)	☒	☐	☐	<0.249						1	µg/L				
19V. Ethylbenzene (100-41-4)	☒	☐	☐	<0.196						1	µg/L				
20V. Methyl Bromide (74-83-9)	☒	☐	☐	<0.61						1	µg/L				
21V. Methyl Chloride (74-87-3)	☒	☐	☐	<0.25						1	µg/L				
22V. Methylene Chloride (74-98-2)	☒	☐	☐	<1.0						1	µg/L				
23V. 1,1,2,2-Tetra-chloroethane (79-34-5)	☒	☐	☐	<0.715						1	µg/L				
24V. Tetrachloroethylene (127-18-4)	☒	☐	☐	<0.508						1	µg/L				

Facility ID. Number: FL0002208 Outfall No. I-008, EP-ISE/S

1. Pollutant and CAS No. (if available)	2. Mark "X"			3. Effluent							4. Units		5. Intake (optional)		
	a. testing required	b. believed present	c. believed absent	a. Maximum Daily Value		b. Max. 30-day Value (if available)		c. Long Term Avg. Value (if available)		d. No. of Analyses	a. Conc.	b. Mass	a. Long Term Avg. Value		b. No. of Analyses
				(1) Conc.	(2) Mass	(1) Conc.	(2) Mass	(1) Conc.	(2) Mass				(1) Conc.	(2) Mass	
GC/MS FRACTION - VOLATILE COMPOUNDS (continued)															
25V. Toluene (108-88-3)	☒	☐	☐	<0.247						1	µg/L				
26V. 1,2-Trans-Dichloroethylene (156-60-5)	☒	☐	☐	<0.399						1	µg/L				
27V. 1,1,2-Trichloroethane (71-55-6)	☒	☐	☐	<0.288						1	µg/L				
28V. 1,1,2-Trichloroethane (79-00-5)	☒	☐	☐	<0.232						1	µg/L				
29V. Trichloroethylene (79-01-6)	☒	☐	☐	<0.305						1	µg/L				
30V. Trichloro-fluoromethane (75-69-4)	☒	☐	☐	<0.301						1	µg/L				
31V. Vinyl Chloride (75-01-4)	☒	☐	☐	<0.414						1	µg/L				
GC/MS FRACTION - ACID COMPOUNDS															
1A. 2-Chlorophenol (95-57-8)	☒	☐	☐	<0.224						1	µg/L				
2A. 2,4-Dichlorophenol (120-83-2)	☒	☐	☐	<0.432						1	µg/L				
3A. 2,4-Dimethylphenol (105-67-9)	☒	☐	☐	<0.396						1	µg/L				
4A. 4,6-Dinitro-O-Cresol (534-53-1)	☒	☐	☐	<0.353						1	µg/L				
5A. 2,4-Dinitrophenol (51-28-5)	☒	☐	☐	<1.4						1	µg/L				
6A. 2-Nitrophenol (88-75-5)	☒	☐	☐	<0.242						1	µg/L				
7A. 4-Nitrophenol (100-02-7)	☒	☐	☐	<0.786						1	µg/L				
8A P-Chloro-M-Cresol (59-50-7)	☒	☐	☐	<0.221						1	µg/L				
9A Pentachlorophenol (87-86-5)	☒	☐	☐	<0.672						1	µg/L				
10A Phenol (108-95-2)	☒	☐	☐	<0.41						1	µg/L				
11A 2,4,5-Trichloro-phenol (88-06-2)	☒	☐	☐	<0.38						1	µg/L				
GC/MS FRACTION - BASE/NEUTRAL COMPOUNDS															
1B. Acenaphthene (63-32-9)	☒	☐	☐	<0.27						1	µg/L				
2B. Acenaphtylene (208-96-8)	☒	☐	☐	<0.26						1	µg/L				
3B. Anthracene (120-12-7)	☒	☐	☐	<0.056						1	µg/L				
4B. Benzidine (92-87-5)	☒	☐	☐	<9.74						1	µg/L				

Facility ID. Number: FL0002208 Outfall No. I-008, EP-ISE/S

1. Pollutant and CAS No. (if available)	2. Mark "X"			3. Effluent							4. Units		5. Intake (optional)		
	a. testing required	b. believed present	c. believed absent	a. Maximum Daily Value		b. Max. 30-day Value (if available)		c. Long Term Avg. Value (if available)		d. No. of Analyses	a. Conc.	b. Mass	a. Long Term Avg. Value		b. No. of Analyses
				(1) Conc.	(2) Mass	(1) Conc.	(2) Mass	(1) Conc.	(2) Mass				(1) Conc.	(2) Mass	
5B. Benzo *(a)* Anthracene (56-55-3)	☒	☐	☐	0.18						1	µg/L				
6B. Benzo *(a)* Pyrene (50-32-8)	☒	☐	☐	<0.13						1	µg/L				
7B. 3,4-Benzo-fluoranthene (205-99-2)	☒	☐	☐	<0.15						1	µg/L				
8B. Benzo *(ghi)* Perylene (191-24-2)	☒	☐	☐	<0.14						1	µg/L				
9B. Benzo *(k)* Fluoranthene (207-08-9)	☒	☐	☐	0.12						1	µg/L				
10B. Bis *(2-Chloroethoxy)* Methane (111-91-1)	☒	☐	☐	<0.32						1	µg/L				
11B. Bis *(2-chloroethyl)* Ether (111-44-4)	☒	☐	☐	<0.46						1	µg/L				
12B. Bis *(2-Chloroisopropyl)* Ether (102-60-1)	☒	☐	☐	<0.34						1	µg/L				
13B. Bis *(2-Ethylhexyl)* Phthalate (117-81-7)	☒	☐	☐	0.35						1	µg/L				
14B. 4-Bromophenyl Phenyl Ether (101-55-3)	☒	☐	☐	<0.27						1	µg/L				
15B Butyl Benzyl Phthalate (84-68-7)	☒	☐	☐	<0.36						1	µg/L				
16B. 2-Chloronaphthalene (91-58-7)	☐	☐	☒												
17B. 4-Chlorophenyl Phenyl Ether (7005-72-3)	☒	☐	☐	<0.45						1	µg/L				
18B. Chrysene (218-01-9)	☒	☐	☐	0.18						1	µg/L				
19B. Dibenzo *(a,h)* Anthracene (53-70-3)	☒	☐	☐	<0.06						1	µg/L				
20B. 1,2-Dichlorobenzene (95-50-1)	☒	☐	☐	<0.34						1	µg/L				
21B. 1,3-Dichlorobenzene (541-73-1)	☒	☐	☐	<0.35						1	µg/L				
22B. 1,4-Dichlorobenzene (106-46-7)	☒	☐	☐	<0.28						1	µg/L				
23B. 3,3'-Dichlorobenzidine (92-94-1)	☒	☐	☐	<0.31						1	µg/L				
24B. Diethyl Phthalate (84-66-2)	☒	☐	☐	<0.33						1	µg/L				
25B. Dimethyl Phthalate (131-11-3)	☒	☐	☐	<0.31						1	µg/L				
26B. Di-N-Butyl Phthalate (84-74-2)	☒	☐	☐	0.52						1	µg/L				
27B. 2,4-Dinitrotoluene (121-14-2)	☒	☐	☐	<0.31						1	µg/L				
28B. 2,6-Dinitrotoluene (606-20-2)	☒	☐	☐	<0.31						1	µg/L				

Facility ID. Number: FL0002208 Outfall No. I-008, EP-ISE/S

1. Pollutant and CAS No. (if available)	2. Mark "X"			3. Effluent							4. Units		5. Intake (optional)		
	a. testing required	b. believed present	c. believed absent	a. Maximum Daily Value		b. Max. 30-day Value (if available)		c. Long Term Avg. Value (if available)		d. No. of Analyses	a. Conc.	b. Mass	a. Long Term Avg. Value		b. No. of Analyses
				(1) Conc.	(2) Mass	(1) Conc.	(2) Mass	(1) Conc.	(2) Mass				(1) Conc.	(2) Mass	
29B. Di-N-Octyl Phthalate (117-84-0)	☒	☐	☐	<0.28						1	µg/L				
30B. 1,2-Diphenylhydrazine *(as Azobenzene)* (122-66-7)	☒	☐	☐	<0.234						1	µg/L				
31B. Fluoranthene (206-44-0)	☒	☐	☐	<0.08						1	µg/L				
32B. Fluorene (86-73-7)	☒	☐	☐	<0.112						1	µg/L				
33B. Hexachlorobenzene (118-74-1)	☒	☐	☐	<0.32						1	µg/L				
34B. Hexachlorobutadiene (87-68-3)	☒	☐	☐	<0.45						1	µg/L				
35B. Hexachlorocyclopentadiene (77-47-4)	☒	☐	☐	<0.74						1	µg/L				
36B. Hexachloroethane (67-72-1)	☒	☐	☐	<0.36						1	µg/L				
37B. Indeno *(1,2,3-cd)* Pyrene (193-39-5)	☒	☐	☐	<0.26						1	µg/L				
38B. Isophorone (78-59-1)	☒	☐	☐	<0.34						1	µg/L				
39B. Naphthalene (91-20-3)	☒	☐	☐	<0.34						1	µg/L				
40B. Nitrobenzene (98-95-9)	☒	☐	☐	<0.31						1	µg/L				
41B N-Nitrosodimethylamine (62-75-9)	☐	☐	☒							1	µg/L				
42B. N-Nitrosodi-N-Propylamine (621-64-7)	☒	☐	☐	<0.1						1	µg/L				
43B. N-Nitrosodiphenylamine (86-30-6)	☐	☐	☒												
44B Phenanthrene (85-01-8)	☒	☐	☐	<0.29						1	µg/L				
45B. Pyrene (129-00-0)	☒	☐	☐	<0.47						1	µg/L				
46B. 1,2,4-Trichlorobenzene (120-82-1)	☒	☐	☐	<0.23						1	µg/L				
CONTROLLED PESTICIDES															
1P. Aldrin (309-00-2)	☐	☐	☒												
2P. -BHC (319-84-6)	☐	☐	☒												
3P -BHC (319-85-7)	☐	☐	☒												
4P. -BHC (58-89-9)	☐	☐	☒												
5P. -BHC (319-86-8)	☐	☐	☒												

Facility ID. Number: FL0002208 Outfall No. I-008, EP-ISE/S

1. Pollutant and CAS No. (if available)	2. Mark "X"			3. Effluent							4. Units		5. Intake (optional)		
	a. testing required	b. believed present	c. believed absent	a. Maximum Daily Value		b. Max. 30-day Value (if available)		c. Long Term Avg. Value (if available)		d. No. of Analyses	a. Conc.	b. Mass	a. Long Term Avg. Value		b. No. of Analyses
				(1) Conc.	(2) Mass	(1) Conc.	(2) Mass	(1) Conc.	(2) Mass				(1) Conc.	(2) Mass	
6P. Chlordane (57-74-9)	☐	☐	☒												
7P. 4,4'-DDT (50-29-3)	☐	☐	☒												
8P. 4,4'-DDE (72-55-9)	☐	☐	☒												
9P. 4,4'-DDD (72-54-8)	☐	☐	☒												
10P. Dieldrin (60-57-1)	☐	☐	☒												
11P. -Endosulfan (115-29-7)	☐	☐	☒												
12P. -Endosulfan (115-29-7)	☐	☐	☒												
13P. Endosulfan Sulfate (1031-07-8)	☐	☐	☒												
14P. Endrin (72-20-8)	☐	☐	☒												
15P. Endrin Aldehyde (7421-92-4)	☐	☐	☒												
16P. Heptachlor (76-44-8)	☐	☐	☒												
17P. Heptachlor Epoxide (1024-57-3)	☐	☐	☒												
18P. PCB-1242 (53469-21-9)	☐	☐	☒												
19P. PCB-1254 (11097-69-1)	☐	☐	☒												
20P. PCB-1221 (11104-28-2)	☐	☐	☒												
21P. PCB-1232 (11141-16-5)	☐	☐	☒												
22P. PCB-1248 (12672-29-6)	☐	☐	☒												
23P. PCB-1260 (11096-82-5)	☐	☐	☒												
24P. PCB-1016 (12674-11-2)	☐	☐	☒												
25P. Toxaphene (8001-35-2)	☐	☐	☒												

FDEP FORM 2CG

WASTEWATER APPLICATION FOR PERMIT TO DISCHARGE PROCESS WASTEWATER FROM NEW OR EXISTING INDUSTRIAL WASTEWATER FACILITIES TO GROUND WATER

WASTEWATER APPLICATION FORM 2CG

PERMIT TO DISCHARGE PROCESS WASTEWATER
FROM NEW OR EXISTING
INDUSTRIAL WASTEWATER FACILITIES
TO GROUND WATER

DEP Form 62-620.910(4)
(Effective November 29, 1994)

FORM
2CG

WASTEWATER APPLICATION FOR PERMIT TO DISCHARGE PROCESS WASTEWATER FROM NEW OR EXISTING INDUSTRIAL WASTEWATER FACILITIES TO GROUND WATER

Facility I.D. Number: FL0002208

Please print or type information in the appropriate areas.

I DISCHARGE LOCATION For each location, list the X,Y coordinates and, where applicable, the name of the land application site.

(latitude/longitude to the nearest 15 seconds)

A. Discharge Location No. (list)	B. Latitude			C. Longitude			D. Name of Land Application
	Deg.	Min.	Sec.	Deg.	Min.	Sec.	
EP-1W	27	20	44	80	14	49	Evaporation/Percolation Basin - West
EP-1E	27	20	44	80	14	41	Evaporation/Percolation Basin - East
EP-1S	27	20	34	80	14	34	Evaporation/Percolation Basin - South
EP-1SE	27	20	36	80	14	28	Evaporation/Percolation Basin - Southeast

II LAND APPLICATION DESIGN

A. Discharge No.	B. Design Configuration and Construction Materials	C. Cover Crop	D. Application Rate	E. Land Application Area	F. Ground Water
EP-1W	Unlined Basin, compacted sloped berms	N/A	See III A	75,000 sq. ft.	G-II
EP-1E	Unlined Basin, compacted sloped berms	N/A	See III A	77,000 sq. ft.	G-II
EP-1S	Unlined Basin, compacted sloped berms	N/A	See III A	105,000 sq. ft.	G-II
EP-1SE	Unlined Basin, compacted sloped berms	N/A	See III A	160,000 sq. ft.	G-II

Form 62-620.910(4)
(Effective November 29, 1994)

Facility I.D. Number: FL0002208

III FLOWS, SOURCES OF POLLUTION, AND TREATMENT TECHNOLOGIES

A. Attach a line drawing showing the water flow through the facility. Indicate sources of intake water, operations contributing wastewater to the effluent, and treatment units labeled to correspond to the more detailed descriptions in Item B. Construct a water balance on the line drawing by showing average flows between intakes, operations, treatment units, and discharge points. If a water balance cannot be determined (e.g., for certain mining activities), provide a pictorial description of the nature and amount of any sources of water and any collection or treatment measures.

B. For each discharge location, provide a description of:

1. All operations contributing wastewater to the effluent; including process wastewater, sanitary wastewater, cooling water, and storm water runoff; Refer to Figures 1, 2, and 3 and Attachment B

2. The average flow contributed by each operation; and Refer to Attachment B

3. The treatment received by the wastewater.

Use the space below. Continue on additional sheets, if necessary.

(1) Discharge Location No.	(2) Operation(s) Contributing Flow		(3) Treatment		
	(a) Operation (list)	(b) Avg. Flow & Units	(a) Description	(b) List Code from Table 2CG-1	
EP-1W	Equip/Nonequip Stormwater		Sedimentation (Settling)	1-U	
	Plant Secondary Drains Make up		Evaporation/Percolation	1-F	1-Y
	Water Treatment Wastewater				
EP-1E	Equip/Nonequip Stormwater		Sedimentation (Settling)	1-U	
			Evaporation/Percolation	1-F	1-Y
EP-1S	Equip/Nonequip Stormwater		Sedimentation (Settling)	1-U	
			Evaporation/Percolation	1-F	1-Y
EP-1SE	Equip/Nonequip Stormwater		Sedimentation (Settling)	1-U	
			Evaporation/Percolation	1-F	1-Y

Facility I.D. Number: FL0002208

III Contd.

C. Except for storm runoff, leaks, or spills, are any of the discharges described in Items II-A or B intermittant or seasonal?

☐ Yes (complete the following table) ☒ No (go to D. below)

(1) Outfall # (List)	(2) Operations(s) Contributing Flow (List)	(3) Frequency		(4) Flow				
		(a) Days per Week (specify avg.)	(b) Months per Yr. (specify avg.)	(a) Flow Rate (in mgd)		(b) Total Volume (specify with units)		(c) Duration (in days)
				Long Term Avg	Max. Daily	Long Term Avg.	Max. Daily	

*For land application systems, also include the Rest Period.

D. Describe practices to be followed to ensure adequate wastewater treatment during emergencies such as power loss and equipment failures causing shutdown of pollution abatement equipment of the proposed/permitted facilities.

Refer to Attachment B

E. List the method(s) and location(s) of flow measurement.

Refer to Attachment B

IV IMPROVEMENTS

A. Are you now required by any Federal, State or local authority to meet any implementation schedule for the construction, upgrading or operation of wastewater treatment equipment or practices or any other environmental programs which may affect the discharges described in this application? This includes, but is not limited to, permit conditions, administrative or enforcement orders, enforcement compliance schedule letters, stipulations, court orders, and grant or loan conditions.

☐ Yes (complete the following table) ☒ No (go to Item VI-B)

1. Identification of Condition, Agreement, Etc.	2. Affected Discharge Locations		3. Brief Description of Project	4. Final Compliance Date	
	a. No.	b. Source of Discharge		a. Required	b. Projected

B. OPTIONAL: You may attach additional sheets describing any additional water pollution control programs (or other environmental projects which may affect your discharges) you now have underway or which you plan. Indicate whether each program is now underway or planned, and indicate your actual or planned schedules for construction.

☐ Mark "X" if description of additional control programs is attached.

Facility I.D. Number: FL0002208

INTAKE AND EFFLUENT CHARACTERISTICS

A, B, & C: See instructions before proceeding--Complete one set of tables for each discharge location -- Annotate the location number in the space provided. NOTE: Tables V-A, V-B, and V-C are included on separate sheets number V-1 through V-10.

D. Use the space below to list any of the pollutants listed in Table 2CG-3 of the instructions, which you know or have reason to believe is discharged or may be discharged from any outfall. For every pollutant you list, briefly describe the reasons you believe it to be present and report any analytical data in your possession.

1. Pollutant	2. Source	1. Pollutant	2. Source
Dimethylamine	Equipment Drain		

VI POTENTIAL DISCHARGES NOT COVERED BY ANALYSIS

Is any pollutant listed in Item V-C a substance or a component of a substance which you currently use or manufacture as an intermediate or final product or by-product?

☐ YES (list all such pollutants below) ☒ NO (go to VII)

VII CONTRACT ANALYSIS INFORMATION

Were any of the analyses reported in Item V performed by a contract laboratory or consulting firm?

☒ YES (list the name, address, telephone number, and certification number of, and pollutants analyzed by each such laboratory or firm below)
☐ NO (go to Section VIII)

A. Name	B. Address	C. Telephone (area code & no.)	D. Pollutants Analyzed (list)
FPL Central Lab #E56078	6001 A Village Blvd.	561-640-2010	Flouride, oil and grease, sulfate, TSS
	West Palm Beach, FL		
Harbor Branch Lab #E93080	5600 US Hwy 1, Ft. Pierce, FL	772-465-2400	Fecal Coliform
Xenco Laboratories #E86240	3231 NW 7th Ave Boca Raton	561-447-7373	Bromide, metals, VOCs, SVOCs
Summit Environmental Labs.	3310 Win Street	330-253-8211	Radiochemistry
#E87688	Cuyahoga Falls, OH 44223		

Form 62-620.910(4)
(Effective November 29, 1994)

Facility I.D. Number: FL0002208

CONNECTION TO REGIONAL POTW

A. Indicate the relationship between this project and area regional planning for wastewater treatment. List steps to be taken for this industrial wastewater facility to become part of an area-wide wastewater treatment system.

The majority of the St. Lucie Power Plant is connected to the South Hutchinson Island Wastewater Treatment facility, although there still exists a small number of septic tanks.

IX-A CERTIFICATIONS FOR NEW OR MODIFIED FACILITIES

This is to certify the engineering features of this pollution control project have been designed by me and found to be in conformity with sound engineering principles, applicable to the treatment and disposal of pollutants characterized in the permit application. There is reasonable assurance, in my professional judgment, that the pollution control facilities, when properly maintained and operated, will discharge an effluent that complies with all applicable statutes of the State of Florida and the rules of the Department. It is also agreed that the undersigned, if authorized by the owner, will furnish the applicant a set of instructions for the proper maintenance and operation of the pollution control facilities and, if applicable, pollution sources.

Signature	Company Name
Name (please type)	Address
(Affix Seal)	Florida Registration No.:
	Telephone No:: Date

I certify under penalty of law that this document and all attachments were prepared under my direction or supervision in accordance with a system designed to assure that qualified personnel properly gather and evaluate the information submitted. Based on my inquiry of the person or persons who manage the system or those persons directly responsible for gathering the information, the information submitted is, to the best of my knowledge and belief, true, accurate, and complete. I am aware that there are significant penalties for submitting false information, including the possibility of fine and imprisonment for knowing violations.

Name (type or print)	Signature
Title	Date Signed
Telephone No. (area code & No.)	

Facility I.D. Number: FL0002208

X-B CERTIFICATIONS FOR PERMIT RENEWALS

This is to certify the engineering features of this pollution control project have been examined by me and found to be in conformity with sound engineering principles, applicable to the treatment and disposal of pollutants characterized in the permit application. There is reasonable assurance, in my professional judgment, that the pollution control facilities, when properly maintained and operated, will discharge an effluent that complies with all applicable statutes of the State of Florida and the rules of the Department.

7/13/10 Signature

Joseph T. Dertien, P.E.
Name (please type)

(Affix Seal)

Golder Associates Inc.
Company Name

Address 6026 NW 1st Place
Gainesville, FL 32607

Florida Registration No.: 35500
Telephone No:: (352) 336-5600 Date 7/13/10

I certify under penalty of law that this document and all attachments were prepared under my direction or supervision in accordance with a system designed to assure that qualified personnel properly gather and evaluate the information submitted. Based on my inquiry of the person or persons who manage the system or those persons directly responsible for gathering the information, the information submitted is, to the best of my knowledge and belief, true, accurate, and complete. I am aware that there are significant penalties for submitting false information, including the possibility of fine and imprisonment for knowing violations.

Richard L. Anderson
Name (type or print)

Vice President, St. Lucie Power Plant
Title

772-467-7100
Telephone No. (area code & No.)

FOR RLA
Signature

7/20/10
Date Signed

Form 62-620.910(4)
(Effective November 29, 1994)

Facility ID. Number: FL0002208 Outfall No. EP-1W

PLEASE PRINT OR TYPE ONLY: You may report some or all of this information on separate sheets instead of completing these pages. Use the same format. SEE INSTRUCTIONS.

VII. INTAKE AND EFFLUENT CHARACTERISTICS

PART A - You must provide the results of at least one analysis for every pollutant in this table. Complete one table for each outfall. See instructions for additional details.

1. Pollutant	2. Effluent							3.. Units		4. Intake (optional)		
	a. Max. Daily Value		b. Max. 30-day Value		c. Annual Avg. Value		d. No. of Analyses	a. Concentration	b. Mass	a. Long Term Avg. Value		b. No. of Analyses
	(1) Conc.	(2) Mass	(1) Conc.	(2) Mass	(1) Conc.	(2) Mass				(1) Conc.	(2) Mass	
a Carbonaceous Biochemical Oxygen Demand (CBOD)	4.25						1	mg/L				
b. Chemical Oxygen Demand (COD)	73.7						1	mg/L				
c. Total Organic Carbon (TOC)	6.44						1	mg/L				
d. Total Suspended Solids (TSS)	13						1	mg/L				
e. Total Nitrogen (as N)	1.51						1	mg/L				
f Total Phosphorus (as P)	0.0793						1	mg/L				
g. Ammonia (as N)	<0.02						1	mg/L				
h. Flow - actual or projected	Value		Value		Value					Value		
i. Flow - design	Value		Value		Value					Value		
j. Specific Conductivity	Value 4,625		Value		Value		1	µS/cm		Value		
k. Temperature (winter)	Value		Value		Value			°C		Value		
l. Temperature (summer)	Value26		Value 26		Value		1	°C		Value		
m. . pH	Min. 8.9	Max 8.9	Min.	Max.			1	STANDARD UNITS				

PART B - Mark "X" in column 2a for each pollutant you know or have reason to believe is present. Mark "X" in column 2b for each pollutant you believe to be absent. If you mark column 2a for any pollutant which is limited either directly, or indirectly but expressly, in an effluent limitations guideline, you must provide the results of at least one analysis for that pollutant. For other pollutants for which you mark column 2a, you must provide quantitative data or an explanation of their presence in your discharge. Complete one table for each outfall. See the instructions for additonal details and requirements.

1. Pollutant and CAS No. (if available)	2. Mark "X"		3. Effluent							4. Units		5. Intake (optional)		
	a. believed present	b. believed absent	a. Maximum Daily Value		b. Max. 30-day Value (if available)		c. Long Term Avg. Value (if available)		d. No. of Analyses	a. Conc.	b. Mass	a. Long Term Avg. Value		b. No. of Analyses
			(1) Conc...	(2) Mass	(1) Conc.	(2) Mass	(1) Conc.	(2) Mass				(1) Conc.	(2) Mass	
a. Bromide (24949-67-9)	☒	☐	4.53						1	mg/L				
b. Chlorine, Total Residual	☒	☐	<0.01						1	mg/L				
c. Color	☒	☐	40						1	CU				
d. Fecal Coliform	☒	☐	<100						1	CFU				
e. Fluoride (16984-48-8)	☒	☐	0.44						1	mg/L				
f. Nitrate-Nitrite (as N)	☒	☐	0.43						1	mg/L				

: Item VII-B Contd.

Facility ID. Number FL0002208 Outfall No. EP-1W

1. Pollutant and CAS No. (if available)	2. Mark "X"		3. Effluent							4. Units		5. Intake (optional)		
	a. believed present	b. believed absent	a. Maximum Daily Value		b. Max. 30-day Value (if available)		c. Long Term Avg. Value (if available)		d. No. of Analyses	a. Conc.	b. Mass	a. Long Term Avg. Value		b. No. of Analyses
			(1) Conc.	(2) Mass	(1) Conc.	(2) Mass	(1) Conc.	(2) Mass				(1) Conc.	(2) Mass	
g. Nitrogen, Total Organic (as N)	☒	☐	1.08						1	mg/L				
h. Oil and grease	☒	☐	<1.4						1	mg/L				
i. Phosphorus, Total (as P) (7723-14-0)	☒	☐	0.0793						1	mg/L				
j. Radioactivity														
(1) Alpha, Total	☒	☐	<2.28						1	pci/L				
(2) Beta, Total	☒	☐	28.1						1	pci/L				
(3) Radium, Total	☐	☒												
(4) Radium 226, Total	☐	☒												
k. Sulfate (as SO_4) (14808-79-8)	☒	☐	170						1	mg/L				
l. Sulfide (as S)	☐	☒												
m. Sulfite (as SO_3) (14265-45-3)	☐	☒												
n. Surfactants	☒	☐	<0.043						1	mg/L				
o. Aluminum, Total (7429-90-5)	☐	☒												
p. Barium, Total (7440-39-3)	☐	☒												
q. Boron, Total (7440-42-8)	☒	☐	0.317						1	mg/L				
r. Cobalt, Total (7440-48-4)	☐	☒												
s. Iron, Total (7439-89-6)	☒	☐	65						1	µg/L				
t. Maagnesium, Total (7439-95-4)	☒	☐	67.2						1	mg/L				
u. Molybdenum, Total (7439-98-7)	☒	☐	71.6						1	µg/L				
v. Manganese, Total (7439-96-5)	☐	☒												
w. Tin, Total (7440-31-5)	☒	☐	<0.004						1	mg/L				
x. Titanium, Total (7440-32-6)	☒	☐	<6.1						1	µg/L				

Facility ID. Number: FL0002208 Outfall No. EP-1W

PART C - If you are a primary industry and this outfall contains process wastewater, refer to Table 2c-2 in the instructions to determine which of the GC/MS fractions you must test for. Mark "X" in column 2a for all GC/MS fractions that apply to your industry and for ALL toxic metals, cyanides, and total phenols. If you are not required to mark column 2a (secondary industries, non-process wastewater outfalls, and non-required GC/MS fractions), mark "X" in column 2b for each pollutant you know or have reason to believe is present. Mark "X" in column 2c for each pollutant you believe is absent. If you mark column 2a for any pollutant, you must provide the results of at least one analysis for that pollutant. If you mark column 2b for any pollutant, you must provide the results of at least one anlysis for that pollutnat if you know or have reason to believe it will be discharged in concentrations of 10 ppb or greater. If you mark column 2b for acrolein, acrylonitrile, 2,4,dinitrophenol, or 2-methyl-4,6 dinitrophenol, you must provide the results of at least one analysis for each of these pollutants which you know or have reason to believe that you discharge in concentrations of 100 ppb or greater. Otherwise, for pollutants for which you mark column2b, you must either submit at least one analysis or briefly describe the reasons the pollutant is expected to be discharged. Note that there are 7 pages to this part; please review each carefully. Complete one table (all 7 pages) for each outfall. See instructions for additional details and requirements.

1. Pollutant and CAS No. (if available)	2. Mark "X"			3. Effluent							4. Units		5. Intake (optional)		
	a. testing required	b. believed present	c. believed absent	a. Maximum Daily Value		b. Max. 30-day Value (if available)		c. Long Term Avg. Value (if available)		d. No. of Analyses	a. Conc.	b. Mass	a. Long Term Avg. Value		b. No. of Analyses
				(1) Conc.	(2) Mass	(1) Conc.	(2) Mass	(1) Conc.	(2) Mass				(1) Conc.	(2) Mass	
METALS, CYANIDE, AND TOTAL PHENOLS															
1M. Antimony, Total (7440-36-0)	☒	☐	☐	<3.8						1	µg/L				
2M. Arsenic, Total (7723-14-0)	☒	☐	☐	<4.6						1	µg/L				
3M. Beryllium, Total (7440-41-7)	☒	☐	☐	<0.67						1	µg/L				
4M. Cadmium, Total (7440-43-9)	☒	☐	☐	<0.57						1	µg/L				
5M. Chromium, Total (7440-47-3)	☒	☐	☐	<1.1						1	µg/L				
6M. Copper, Total (7440-50-8)	☒	☐	☐	<9.6						1	µg/L				
7M. Lead, Total (7439-92-1)	☒	☐	☐	<3.1						1	µg/L				
8M. Mercury, Total (7439-97-6)	☒	☐	☐	0.0027						1	µg/L				
9M. Nickel, Total (7440-02-0)	☒	☐	☐	<5.2						1	µg/L				
10M. Selenium, Total (7782-49-2)	☒	☐	☐	<5.4						1	µg/L				
11M. Silver, Total (7440-22-4)	☒	☐	☐	1.76						1	µg/L				
12M. Thallium, Total (7440-28-0)	☒	☐	☐	<0.269						1	µg/L				
13M. Zinc, Total (7440-66-6)	☒	☐	☐	50.9						1	µg/L				
14M. Cyanide, Total (57-12-5)	☒	☐	☐	<0.0013						1	mg/L				
15M. Phenols, Total	☒	☐	☐	<0.006						1	mg/l				
DIOXIN															
2,3,7,8-Tetra-chlorodibenzo-P-Dioxin (1764-01-6)	☐	☐	☒												
GC/MS FRACTION - VOLATILE COMPOUNDS															
1V. Acrolein (107-02-8)	☒	☐	☐	<3.45						1	µg/L				
2V. Acrylonitrile (107-13-1)	☒	☐	☐	<3.08						1	µg/L				

Facility ID. Number: FL0002208 Outfall No. EP-1W

1. Pollutant and CAS No. (if available)	2. Mark "X"			3. Effluent							4. Units		5. Intake (optional)		
	a. testing required	b. believed present	c. believed absent	a. Maximum Daily Value		b. Max. 30-day Value (if available)		c. Long Term Avg. Value (if available)		d. No. of Analyses	a. Conc.	b. Mass	a. Long Term Avg. Value		b. No. of Analyses
				(1) Conc.	(2) Mass	(1) Conc.	(2) Mass	(1) Conc.	(2) Mass				(1) Conc.	(2) Mass	
GC/MS FRACTION - VOLATILE COMPOUNDS (Continued)															
3V. Benzene (71-43-2)	☒	☐	☐	<0.211						1	µg/L				
4V. Bis (Chloromethyl) Ether (542-88-1)	☐	☐	☒												
5V. Bromoform (75-25-2)	☒	☐	☐	<0.418						1	µg/L				
6V. Carbon Tetrachloride (56-23-5)	☒	☐	☐	<0.213						1	µg/L				
7V Chlorobenzene (108-90-7)	☒	☐	☐	<0.245						1	µg/L				
8V. Chlorodi-bromomethane (124-8-1)	☒	☐	☐	<0.256						1	µg/L				
9V. Chloroethane (74-00-3)	☒	☐	☐	<0.34						1	µg/L				
10V. 2-Chloro-ethylvinyl Ether (110-75-8)	☒	☐	☐	<0.612						1	µg/L				
11V. Chloroform (67-86-3)	☒	☐	☐	<0..263						1	µg/L				
12V. Dichloro-bromomethane (75-24-4)	☒	☐	☐	<0.191						1	µg/L				
13V. Dichloro-difluoromethane (75-71-8)	☒	☐	☐	<0.414						1	µg/L				
14V. 1,1-Dichloroethane (75-34-3)	☒	☐	☐	<0.255						1	µg/L				
15V. 1,2-Dichloroethane (107-06-2)	☒	☐	☐	<0.238						1	µg/L				
16V. 1,1-Dichloroethylene (75-35-4)	☒	☐	☐	<0.269						1	µg/L				
17V. 1,2,-Dichloropropane (78-87-5)	☒	☐	☐	<0.326						1	µg/L				
18V. 1,3-Dichloropropylene (542-75-6)	☒	☐	☐	<0.359						1	µg/L				
19V. Ethylbenzene (100-41-4)	☒	☐	☐	<0.196						1	µg/L				
20V. Methyl Bromide (74-83-9)	☒	☐	☐	<0.61						1	µg/L				
21V. Methyl Chloride (74-87-3)	☒	☐	☐	<0.25						1	µg/L				
22V. Methylene Chloride (74-98-2)	☒	☐	☐	<0.639						1	µg/L				
23V. 1,1,2,2-Tetra-chloroethane (79-34-5)	☒	☐	☐	<0.233						1	µg/L				
24V. Tetrachloroethylene (127-18-4)	☒	☐	☐	<0.508						1	µg/L				

Facility ID. Number: FL0002208 Outfall No. EP-1W

1. Pollutant and CAS No. (if available)	2. Mark "X"			3. Effluent							4. Units		5. Intake (optional)		
	a. testing required	b. believed present	c. believed absent	a. Maximum Daily Value		b. Max. 30-day Value (if available)		c. Long Term Avg. Value (if available)		d. No. of Analyses	a. Conc.	b. Mass	a. Long Term Avg. Value		b. No. of Analyses
				(1) Conc.	(2) Mass	(1) Conc.	(2) Mass	(1) Conc.	(2) Mass				(1) Conc.	(2) Mass	
GC/MS FRACTION - VOLATILE COMPOUNDS (continued)															
25V. Toluene (108-88-3)	☒	☐	☐	<0.247						1	µg/L				
26V. 1,2-Trans-Dichloroethylene (156-60-5)	☒	☐	☐	<0.399						1	µg/L				
27V. 1,1,2-Trichloroethane (71-55-6)	☒	☐	☐	<0.232						1	µg/L				
28V. 1,1,2-Trichloroethane (79-00-5)	☒	☐	☐	<0.288						1	µg/L				
29V. Trichloroethylene (79-01-6)	☒	☐	☐	<0.305						1	µg/L				
30V. Trichloro-fluoromethane (75-69-4)	☒	☐	☐	<0.301						1	µg/L				
31V. Vinyl Chloride (75-01-4)	☒	☐	☐	<0.414						1	µg/L				
GC/MS FRACTION - ACID COMPOUNDS															
1A. 2-Chlorophenol (95-57-8)	☒	☐	☐	<2.6						1	µg/L				
2A. 2,4-Dichlorophenol (120-83-2)	☒	☐	☐	<0.43						1	µg/L				
3A. 2,4-Dimethylphenol (105-67-9)	☒	☐	☐	<0.4						1	µg/L				
4A. 4,6-Dinitro-O-Cresol (534-53-1)	☒	☐	☐	<0.35						1	µg/L				
5A. 2,4-Dinitrophenol (51-28-5)	☒	☐	☐	<1.4						1	µg/L				
6A. 2-Nitrophenol (88-75-5)	☒	☐	☐	<0.24						1	µg/L				
7A. 4-Nitrophenol (100-02-7)	☒	☐	☐	<0.79						1	µg/L				
8A P-Chloro-M-Cresol (59-50-7)	☒	☐	☐	<0.22						1	µg/L				
9A Pentachlorophenol (87-86-5)	☒	☐	☐	<0.7						1	µg/L				
10A Phenol (108-95-2)	☒	☐	☐	<0.4						1	µg/L				
11A 2,4,5-Trichloro-phenol (88-06-2)	☒	☐	☐	<0.38						1	µg/L				
GC/MS FRACTION - BASE/NEUTRAL COMPOUNDS															
1B. Acenaphthene (63-32-9)	☒	☐	☐	<0.027						1	µg/L				
2B. Acenaphtylene (208-96-8)	☒	☐	☐	<0.026						1	µg/L				
3B. Anthracene (120-12-7)	☒	☐	☐	<0.006						1	µg/L				
4B. Benzidine (92-87-5)	☒	☐	☐	<9.7						1	µg/L				

Facility ID. Number: FL0002208 Outfall No. EP-1W

1. Pollutant and CAS No. (if available)	2. Mark "X"			3. Effluent							4. Units		5. Intake (optional)		
	a. testing required	b. believed present	c. believed absent	a. Maximum Daily Value		b. Max. 30-day Value (if available)		c. Long Term Avg. Value (if available)		d. No. of Analyses	a. Conc.	b. Mass	a. Long Term Avg. Value		b. No. of Analyses
				(1) Conc.	(2) Mass	(1) Conc.	(2) Mass	(1) Conc.	(2) Mass				(1) Conc.	(2) Mass	
5B. Benzo *(a)* Anthracene (56-55-3)	☒	☐	☐	<0.011						1	µg/L				
6B. Benzo *(a)* Pyrene (50-32-8)	☒	☐	☐	<0.013						1	µg/L				
7B. 3,4-Benzo-fluoranthene (205-99-2)	☒	☐	☐	<0.015						1	µg/L				
8B. Benzo *(ghi)* Perylene (191-24-2)	☒	☐	☐	<0.014						1	µg/L				
9B. Benzo *(k)* Fluoranthene (207-08-9)	☒	☐	☐	<0.012						1	µg/L				
10B. Bis *(2-Chloroethoxy)* Methane (111-91-1)	☒	☐	☐	<0.32						1	µg/L				
11B. Bis *(2-chloroethyl)* Ether (111-44-4)	☒	☐	☐	<0.46						1	µg/L				
12B. Bis *(2-Chloroisopropyl)* Ether (102-60-1)	☒	☐	☐	<0.34						1	µg/L				
13B. Bis *(2-Ethylhexyl)* Phthalate (117-81-7)	☒	☐	☐	0.75						1	µg/L				
14B. 4-Bromophenyl Phenyl Ether (101-55-3)	☒	☐	☐	<0.27						1	µg/L				
15B Butyl Benzyl Phthalate (84-68-7)	☒	☐	☐	<0.36						1	µg/L				
16B. 2-Chloronaphthalene (91-58-7)	☒	☐	☐	<0.32						1	µg/L				
17B. 4-Chlorophenyl Phenyl Ether (7005-72-3)	☒	☐	☐	<0.45						1	µg/L				
18B. Chrysene (218-01-9)	☒	☐	☐	<0.017						1	µg/L				
19B. Dibenzo *(a,h)* Anthracene (53-70-3)	☒	☐	☐	<0.006						1	µg/L				
20B. 1,2-Dichlorobenzene (95-50-1)	☒	☐	☐	<0.34						1	µg/L				
21B. 1,3-Dichlorobenzene (541-73-1)	☒	☐	☐	<0.35						1	µg/L				
22B. 1,4-Dichlorobenzene (106-46-7)	☒	☐	☐	<0.28						1	µg/L				
23B. 3,3'-Dichlorobenzidine (92-94-1)	☒	☐	☐	<0.31						1	µg/L				
24B. Diethyl Phthalate (84-66-2)	☒	☐	☐	<0.33						1	µg/L				
25B. Dimethyl Phthalate (131-11-3)	☒	☐	☐	<0.21						1	µg/L				
26B. Di-N-Butyl Phthalate (84-74-2)	☒	☐	☐	<0.28						1	µg/L				
27B. 2,4-Dinitrotoluene (121-14-2)	☒	☐	☐	<0.31						1	µg/L				
28B. 2,6-Dinitrotoluene (606-20-2)	☒	☐	☐	<0.31						1	µg/L				

Facility ID. Number: FL0002208 Outfall No. EP-1W

1. Pollutant and CAS No. (if available)	2. Mark "X"			3. Effluent							4. Units		5. Intake (optional)		
	a. testing required	b. believed present	c. believed absent	a. Maximum Daily Value		b. Max. 30-day Value (if available)		c. Long Term Avg. Value (if available)		d. No. of Analyses	a. Conc.	b. Mass	a. Long Term Avg. Value		b. No. of Analyses
				(1) Conc.	(2) Mass	(1) Conc.	(2) Mass	(1) Conc.	(2) Mass				(1) Conc.	(2) Mass	
29B. Di-N-Octyl Phthalate (117-84-0)	☒	☐	☐	<0.28						1	µg/L				
30B. 1,2-Diphenylhydrazine *(as Azobenzene)* (122-66-7)	☒	☐	☐	<0.23						1	µg/L				
31B. Fluoranthene (206-44-0)	☒	☐	☐	<0.008						1	µg/L				
32B. Fluorene (86-73-7)	☒	☐	☐	<0.011						1	µg/L				
33B. Hexachlorobenzene (118-74-1)	☒	☐	☐	<0.32						1	µg/L				
34B. Hexachlorobutadiene (87-68-3)	☒	☐	☐	<0.45						1	µg/L				
35B. Hexachlorocyclopentadiene (77-47-4)	☒	☐	☐	<0.7						1	µg/L				
36B. Hexachloroethane (67-72-1)	☒	☐	☐	<0.36						1	µg/L				
37B. Indeno *(1,2,3-cd)* Pyrene (193-39-5)	☒	☐	☐	<0.011						1	µg/L				
38B. Isophorone (78-59-1)	☒	☐	☐	<0.34						1	µg/L				
39B. Naphthalene (91-20-3)	☒	☐	☐	<0.034						1	µg/L				
40B. Nitrobenzene (98-95-9)	☒	☐	☐	<0.31						1	µg/L				
41B N-Nitrosodimethylamine (62-75-9)	☒	☐	☐	<0.33						1	µg/L				
42B. N-Nitrosodi-N-Propylamine (621-64-7)	☐	☐	☒												
43B. N-Nitro-sodiphenylamine (86-30-6)	☒	☐	☐	<0.001						1	µg/L				
44B Phenanthrene (85-01-8)	☒	☐	☐	<0.014						1	µg/L				
45B. Pyrene (129-00-0)	☒	☐	☐	<0.008						1	µg/L				
46B. 1,2,4-Trichlorobenzene (120-82-1)	☒	☐	☐	<1.5						1	µg/L				
PESTICIDES/PCB'S (GC/MS FRACTION - BASE/NEUTRAL)															
1P. Aldrin (309-00-2)	☐	☐	☒												
2P. -BHC (319-84-6)	☐	☐	☒												
3P -BHC (319-85-7)	☐	☐	☒												
4P. -BHC (58-89-9)	☐	☐	☒												
5P. -BHC (319-86-8)	☐	☐	☒												

Facility ID. Number: FL0002208 Outfall No. EP-1W

1. Pollutant and CAS No. (if available)	2. Mark "X"			3. Effluent							4. Units		5. Intake (optional)		
	a. testing required	b. believed present	c. believed absent	a. Maximum Daily Value		b. Max. 30-day Value (if available)		c. Long Term Avg. Value (if available)		d. No. of Analyses	a. Conc.	b. Mass	a. Long Term Avg. Value		b. No. of Analyses
				(1) Conc.	(2) Mass	(1) Conc.	(2) Mass	(1) Conc.	(2) Mass				(1) Conc.	(2) Mass	
6P. Chlordane (57-74-9)	☐	☐	☒												
7P. 4,4'-DDT (50-29-3)	☐	☐	☒												
8P. 4,4'-DDE (72-55-9)	☐	☐	☒												
9P. 4,4'-DDD (72-54-8)	☐	☐	☒												
10P. Dieldrin (60-57-1)	☐	☐	☒												
11P. -Endosulfan (115-29-7)	☐	☐	☒												
12P. -Endosulfan (115-29-7)	☐	☐	☒												
13P. Endosulfan Sulfate (1031-07-8)	☐	☐	☒												
14P. Endrin (72-20-8)	☐	☐	☒												
15P. Endrin Aldehyde (7421-92-4)	☐	☐	☒												
16P. Heptachlor (76-44-8)	☐	☐	☒												
17P. Heptachlor Epoxide (1024-57-3)	☐	☐	☒												
18P. PCB-1242 (53469-21-9)	☐	☐	☒												
19P. PCB-1254 (11097-69-1)	☐	☐	☒												
20P. PCB-1221 (11104-28-2)	☐	☐	☒												
21P. PCB-1232 (11141-16-5)	☐	☐	☒												
22P. PCB-1248 (12672-29-6)	☐	☐	☒												
23P. PCB-1260 (11096-82-5)	☐	☐	☒												
24P. PCB-1016 (12674-11-2)	☐	☐	☒												
25P. Toxaphene (8001-35-2)	☐	☐	☒												

Facility ID. Number: FL0002208 Outfall No. EP-1E

PLEASE PRINT OR TYPE ONLY: You may report some or all of this information on separate sheets instead of completing these pages. Use the same format. SEE INSTRUCTIONS.

VII. INTAKE AND EFFLUENT CHARACTERISTICS

PART A - You must provide the results of at least one analysis for every pollutant in this table. Complete one table for each outfall. See instructions for additional details.

1. Pollutant	2. Effluent							3. Units		4. Intake (optional)		
	a. Max. Daily Value		b. Max. 30-day Value		c. Annual Avg. Value		d. No. of Analyses	a. Concentration	b. Mass	a. Long Term Avg. Value		b. No. of Analyses
	(1) Conc.	(2) Mass	(1) Conc.	(2) Mass	(1) Conc.	(2) Mass				(1) Conc.	(2) Mass	
a. Carbonaceous Biochemical Oxygen Demand (CBOD)	6.59						1	mg/L				
b. Chemical Oxygen Demand (COD)	34.6						1	mg/L				
c. Total Organic Carbon (TOC)	3.37						1	mg/L				
d. Total Suspended Solids (TSS)	27						1	mg/L				
e. Total Nitrogen (as N)	1.64						1	mg/L				
f. Total Phosphorus (as P)												
g. Ammonia (as N)	<0.02						1	mg/L				
h. Flow - actual or projected	Value		Value		Value					Value		
i. Flow - design	Value		Value		Value					Value		
j. Specific Conductivity	Value 1,420		Value		Value		1	µS/cm		Value		
k. Temperature (winter)	Value		Value		Value			°C		Value		
l. Temperature (summer)	Value 26		Value 26		Value		1	°C		Value		
m. . pH	Min. 9.9	Max 9.9	Min.	Max.			1	STANDARD UNITS				

PART B - Mark "X" in column 2a for each pollutant you know or have reason to believe is present. Mark "X" in column 2b for each pollutant you believe to be absent. If you mark column 2a for any pollutant which is limited either directly, or indirectly but expressly, in an effluent limitations guideline, you must provide the results of at least one analysis for that pollutant. For other pollutants for which you mark column 2a, you must provide quantitative data or an explanation of their presence in your discharge. Complete one table for each outfall. See the instructions for additonal details and requirements.

1. Pollutant and CAS No. (if available)	2. Mark "X"		3. Effluent							4. Units		5. Intake (optional)		
	a. believed present	b. believed absent	a. Maximum Daily Value		b. Max. 30-day Value (if available)		c. Long Term Avg. Value (if available)		d. No. of Analyses	a. Conc.	b. Mass	a. Long Term Avg. Value		b. No. of Analyses
			(1) Conc...	(2) Mass	(1) Conc.	(2) Mass	(1) Conc.	(2) Mass				(1) Conc.	(2) Mass	
a. Bromide (24949-67-9)	☒	☐	1.47						1	mg/L				
b. Chlorine, Total Residual	☒	☐	<0.01						1	mg/L				
c. Color	☒	☐	30						1	CU				
d. Fecal Coliform	☒	☐	200						1	CFU				
e. Fluoride (16984-48-8)	☒	☐	<0.1						1	mg/L				
f. Nitrate-Nitrite (as N)	☒	☐	<0.009						1	mg/L				

: Item VII-B Contd. Facility ID. Number FL0002208 Outfall No. EP-1E

1. Pollutant and CAS No. (if available)	2. Mark "X"		3. Effluent							4. Units		5. Intake (optional)		
	a. believed present	b. believed absent	a. Maximum Daily Value		b. Max. 30-day Value (if available)		c. Long Term Avg. Value (if available)		d. No. of Analyses	a. Conc.	b. Mass	a. Long Term Avg. Value		b. No. of Analyses
			(1) Conc.	(2) Mass	(1) Conc.	(2) Mass	(1) Conc.	(2) Mass				(1) Conc.	(2) Mass	
g. Nitrogen, Total Organic (as N)	☒	☐	1.64						1	mg/L				
h. Oil and grease	☒	☐	<1.4						1	mg/L				
i. Phosphorus, Total (as P) (7723-14-0)	☐	☒												
j. Radioactivity														
(1) Alpha, Total	☒	☐	<2.28						1	pci/L				
(2) Beta, Total	☒	☐	11.7						1	pci/L				
(3) Radium, Total	☐	☒												
(4) Radium 226, Total	☐	☒												
k. Sulfate (as SO_4) (14808-79-8)	☒	☐	59						1	mg/L				
l. Sulfide (as S)	☐	☒												
m. Sulfite (as SO_3) (14265-45-3)	☐	☒												
n. Surfactants	☒	☐	0.06						1	mg/L				
o. Aluminum, Total (7429-90-5)	☐	☒												
p. Barium, Total (7440-39-3)	☐	☒												
q. Boron, Total (7440-42-8)	☒	☐	0.279						1	mg/L				
r. Cobalt, Total (7440-48-4)	☐	☒												
s. Iron, Total (7439-89-6)	☒	☐	221						1	µg/L				
t. Maagnesium, Total (7439-95-4)	☒	☐	26.2						1	mg/L				
u. Molybdenum, Total (7439-98-7)	☒	☐	158						1	µg/L				
v. Manganese, Total (7439-96-5)	☐	☒												
w. Tin, Total (7440-31-5)	☒	☐	<0.004						1	mg/L				
x. Titanium, Total (7440-32-6)	☒	☐	<6.1						1	µg/L				

Facility ID. Number: FL0002208 Outfall No. EP-1E

PART C - If you are a primary industry and this outfall contains process wastewater, refer to Table 2c-2 in the instructions to determine which of the GC/MS fractions you must test for. Mark "X" in column 2a for all GC/MS fractions that apply to your industry and for ALL toxic metals, cyanides, and total phenols. If you are not required to mark column 2a (secondary industries, non-process wastewater outfalls, and non-required GC/MS fractions), mark "X" in column 2b for each pollutant you know or have reason to believe is present. Mark "X" in column 2c for each pollutant you believe is absent. If you mark column 2a for any pollutant, you must provide the results of at least one analysis for that pollutant. If you mark column 2b for any pollutant, you must provide the results of at least one anlysis for that pollutnat if you know or have reason to believe it will be discharged in concentrations of 10 ppb or greater. If you mark column 2b for acrolein, acrylonitrile, 2,4,dinitrophenol, or 2-methyl-4,6 dinitrophenol, you must provide the results of at least one analysis for each of these pollutants which you know or have reason to believe that you discharge in concentrations of 100 ppb or greater. Otherwise, for pollutants for which you mark column2b, you must either submit at least one analysis or briefly describe the reasons the pollutant is expected to be discharged. Note that there are 7 pages to this part; please review each carefully. Complete one table (all 7 pages) for each outfall. See instructions for additional details and requirements.

1. Pollutant and CAS No. (if available)	2. Mark "X"			3. Effluent							4. Units		5. Intake (optional)		
	a. testing required	b. believed present	c. believed absent	a. Maximum Daily Value		b. Max. 30-day Value (if available)		c. Long Term Avg. Value (if available)		d. No. of Analyses	a. Conc.	b. Mass	a. Long Term Avg. Value		b. No. of Analyses
				(1) Conc.	(2) Mass	(1) Conc.	(2) Mass	(1) Conc.	(2) Mass				(1) Conc.	(2) Mass	
METALS, CYANIDE, AND TOTAL PHENOLS															
1M. Antimony, Total (7440-36-0)	☒	☐	☐	4.33						1	µg/L				
2M. Arsenic, Total (7723-14-0)	☒	☐	☐	<4.6						1	µg/L				
3M. Beryllium, Total (7440-41-7)	☒	☐	☐	<0.67						1	µg/L				
4M. Cadmium, Total (7440-43-9)	☒	☐	☐	<0.57						1	µg/L				
5M. Chromium, Total (7440-47-3)	☒	☐	☐	<1.1						1	µg/L				
6M. Copper, Total (7440-50-8)	☒	☐	☐	<9.6						1	µg/L				
7M. Lead, Total (7439-92-1)	☒	☐	☐	<3.1						1	µg/L				
8M. Mercury, Total (7439-97-6)	☒	☐	☐	0.0035						1	µg/L				
9M. Nickel, Total (7440-02-0)	☒	☐	☐	<5.2						1	µg/L				
10M. Selenium, Total (7782-49-2)	☒	☐	☐	5.62						1	µg/L				
11M. Silver, Total (7440-22-4)	☒	☐	☐	<1.6						1	µg/L				
12M. Thallium, Total (7440-28-0)	☒	☐	☐	<0.269						1	µg/L				
13M. Zinc, Total (7440-66-6)	☒	☐	☐	24.9						1	µg/L				
14M. Cyanide, Total (57-12-5)	☒	☐	☐	<0.0013						1	mg/L				
15M. Phenols, Total	☒	☐	☐	<0.006						1	mg/l				
DIOXIN															
2,3,7,8-Tetra-chlorodibenzo-P-Dioxin (1764-01-6)	☐	☐	☒												
GC/MS FRACTION - VOLATILE COMPOUNDS															
1V. Acrolein (107-02-8)	☒	☐	☐	<3.45						1	µg/L				
2V. Acrylonitrile (107-13-1)	☒	☐	☐	<3.08						1	µg/L				

Facility ID. Number: FL0002208 Outfall No. EP-1E

1. Pollutant and CAS No. (if available)	2. Mark "X"			3. Effluent							4. Units		5. Intake (optional)		
	a. testing required	b. believed present	c. believed absent	a. Maximum Daily Value		b. Max. 30-day Value (if available)		c. Long Term Avg. Value (if available)		d. No. of Analyses	a. Conc.	b. Mass	a. Long Term Avg. Value		b. No. of Analyses
				(1) Conc.	(2) Mass	(1) Conc.	(2) Mass	(1) Conc.	(2) Mass				(1) Conc.	(2) Mass	
GC/MS FRACTION - VOLATILE COMPOUNDS (continued)															
3V. Benzene (71-43-2)	☒	☐	☐	<0.211						1	µg/L				
4V. Bis (Chloromethyl) Ether (542-88-1)	☐	☐	☒												
5V. Bromoform (75-25-2)	☒	☐	☐	<0.418						1	µg/L				
6V. Carbon Tetrachloride (56-23-5)	☒	☐	☐	<0.213						1	µg/L				
7V Chlorobenzene (108-90-7)	☒	☐	☐	<0.245						1	µg/L				
8V. Chlorodi-bromomethane (124-8-1)	☒	☐	☐	<0.256						1	µg/L				
9V. Chloroethane (74-00-3)	☒	☐	☐	<0.34						1	µg/L				
10V. 2-Chloro-ethylvinyl Ether (110-75-8)	☒	☐	☐	<0.612						1	µg/L				
11V. Chloroform (67-86-3)	☒	☐	☐	<0..263						1	µg/L				
12V. Dichloro-bromomethane (75-24-4)	☒	☐	☐	<0.191						1	µg/L				
13V. Dichloro-difluoromethane (75-71-8)	☒	☐	☐	<0.414						1	µg/L				
14V. 1,1-Dichloroethane (75-34-3)	☒	☐	☐	<0.255						1	µg/L				
15V. 1,2-Dichloroethane (107-06-2)	☒	☐	☐	<0.338						1	µg/L				
16V. 1,1-Dichloroethylene (75-35-4)	☒	☐	☐	<0.269						1	µg/L				
17V. 1,2,-Dichloropropane (78-87-5)	☒	☐	☐	<0.326						1	µg/L				
18V. 1,3-Dichloropropylene (542-75-6)	☒	☐	☐	<0.359						1	µg/L				
19V. Ethylbenzene (100-41-4)	☒	☐	☐	<0.196						1	µg/L				
20V. Methyl Bromide (74-83-9)	☒	☐	☐	<0.61						1	µg/L				
21V. Methyl Chloride (74-87-3)	☒	☐	☐	<0.25						1	µg/L				
22V. Methylene Chloride (74-98-2)	☒	☐	☐	<0.639						1	µg/L				
23V. 1,1,2,2-Tetra-chloroethane (79-34-5)	☒	☐	☐	<0.233						1	µg/L				
24V. Tetrachloroethylene (127-18-4)	☒	☐	☐	<0.508						1	µg/L				

Facility ID. Number: FL0002208 Outfall No. EP-1E

1. Pollutant and CAS No. (if available)	2. Mark "X"			3. Effluent							4. Units		5. Intake (optional)		
	a. testing required	b. believed present	c. believed absent	a. Maximum Daily Value		b. Max. 30-day Value (if available)		c. Long Term Avg. Value (if available)		d. No. of Analyses	a. Conc.	b. Mass	a. Long Term Avg. Value		b. No. of Analyses
				(1) Conc.	(2) Mass	(1) Conc.	(2) Mass	(1) Conc.	(2) Mass				(1) Conc.	(2) Mass	
GC/MS FRACTION - VOLATILE COMPOUNDS (continued)															
25V. Toluene (108-88-3)	☒	☐	☐	0.46						1	µg/L				
26V. 1,2-Trans-Dichloroethylene (156-60-5)	☒	☐	☐	<0.399						1	µg/L				
27V. 1,1,2-Trichloroethane (71-55-6)	☒	☐	☐	<0.288						1	µg/L				
28V. 1,1,2-Trichloroethane (79-00-5)	☒	☐	☐	<0.232						1	µg/L				
29V. Trichloroethylene (79-01-6)	☒	☐	☐	<0.305						1	µg/L				
30V. Trichloro-fluoromethane (75-69-4)	☒	☐	☐	<0.301						1	µg/L				
31V. Vinyl Chloride (75-01-4)	☒	☐	☐	<0.414						1	µg/L				
GC/MS FRACTION - ACID COMPOUNDS															
1A. 2-Chlorophenol (95-57-8)	☒	☐	☐	<2.6						1	µg/L				
2A. 2,4-Dichlorophenol (120-83-2)	☒	☐	☐	<0.43						1	µg/L				
3A. 2,4-Dimethylphenol (105-67-9)	☒	☐	☐	<0.4						1	µg/L				
4A. 4,6-Dinitro-O-Cresol (534-53-1)	☒	☐	☐	<0.35						1	µg/L				
5A. 2,4-Dinitrophenol (51-28-5)	☒	☐	☐	<1.4						1	µg/L				
6A. 2-Nitrophenol (88-75-5)	☒	☐	☐	<0.24						1	µg/L				
7A. 4-Nitrophenol (100-02-7)	☒	☐	☐	<0.79						1	µg/L				
8A P-Chloro-M-Cresol (59-50-7)	☒	☐	☐	<0.22						1	µg/L				
9A Pentachlorophenol (87-86-5)	☒	☐	☐	<0.7						1	µg/L				
10A Phenol (108-95-2)	☒	☐	☐	<0.4						1	µg/L				
11A 2,4,5-Trichloro-phenol (88-06-2)	☒	☐	☐	<0.38						1	µg/L				
GC/MS FRACTION - BASE/NEUTRAL COMPOUNDS															
1B. Acenaphthene (63-32-9)	☒	☐	☐	<0.027						1	µg/L				
2B. Acenaphtylene (208-96-8)	☒	☐	☐	<0.026						1	µg/L				
3B. Anthracene (120-12-7)	☒	☐	☐	<0.006						1	µg/L				
4B. Benzidine (92-87-5)	☒	☐	☐	<9.7						1	µg/L				

Facility ID. Number: FL0002208 Outfall No. EP-1E

1. Pollutant and CAS No. (if available)	2. Mark "X"			3. Effluent							4. Units		5. Intake (optional)		
	a. testing required	b. believed present	c. believed absent	a. Maximum Daily Value		b. Max. 30-day Value (if available)		c. Long Term Avg. Value (if available)		d. No. of Analyses	a. Conc.	b. Mass	a. Long Term Avg. Value		b. No. of Analyses
				(1) Conc.	(2) Mass	(1) Conc.	(2) Mass	(1) Conc.	(2) Mass				(1) Conc.	(2) Mass	
5B. Benzo *(a)* Anthracene (56-55-3)	☒	☐	☐	<0.011						1	µg/L				
6B. Benzo *(a)* Pyrene (50-32-8)	☒	☐	☐	<0.013						1	µg/L				
7B. 3,4-Benzo-fluoranthene (205-99-2)	☒	☐	☐	<0.015						1	µg/L				
8B. Benzo *(ghi)* Perylene (191-24-2)	☒	☐	☐	<0.014						1	µg/L				
9B. Benzo *(k)* Fluoranthene (207-08-9)	☒	☐	☐	<0.012						1	µg/L				
10B. Bis *(2-Chloroethoxy)* Methane (111-91-1)	☒	☐	☐	<0.32						1	µg/L				
11B. Bis *(2-chloroethyl)* Ether (111-44-4)	☒	☐	☐	<0.46						1	µg/L				
12B. Bis *(2-Chloroisopropyl)* Ether (102-60-1)	☒	☐	☐	<0.34						1	µg/L				
13B. Bis *(2-Ethylhexyl)* Phthalate (117-81-7)	☒	☐	☐	0.62						1	µg/L				
14B. 4-Bromophenyl Phenyl Ether (101-55-3)	☒	☐	☐	<0.27						1	µg/L				
15B Butyl Benzyl Phthalate (84-68-7)	☒	☐	☐	<0.36						1	µg/L				
16B. 2-Chloronaphthalene (91-58-7)	☒	☐	☐	<0.32						1	µg/L				
17B. 4-Chlorophenyl Phenyl Ether (7005-72-3)	☒	☐	☐	<0.45						1	µg/L				
18B. Chrysene (218-01-9)	☒	☐	☐	<0.017						1	µg/L				
19B. Dibenzo *(a,h)* Anthracene (53-70-3)	☒	☐	☐	<0.006						1	µg/L				
20B. 1,2-Dichlorobenzene (95-50-1)	☒	☐	☐	<0.34						1	µg/L				
21B. 1,3-Dichlorobenzene (541-73-1)	☒	☐	☐	<0.35						1	µg/L				
22B. 1,4-Dichlorobenzene (106-46-7)	☒	☐	☐	<0.28						1	µg/L				
23B. 3,3'-Dichlorobenzidine (92-94-1)	☒	☐	☐	<0.31						1	µg/L				
24B. Diethyl Phthalate (84-66-2)	☒	☐	☐	<0.33						1	µg/L				
25B. Dimethyl Phthalate (131-11-3)	☒	☐	☐	<0.21						1	µg/L				
26B. Di-N-Butyl Phthalate (84-74-2)	☒	☐	☐	<0.28						1	µg/L				
27B. 2,4-Dinitrotoluene (121-14-2)	☒	☐	☐	<0.31						1	µg/L				
28B. 2,6-Dinitrotoluene (606-20-2)	☒	☐	☐	<0.31						1	µg/L				

Facility ID. Number: FL0002208 Outfall No. EP-1W

1. Pollutant and CAS No. (if available)	2. Mark "X"			3. Effluent							4. Units		5. Intake (optional)		
	a. testing required	b. believed present	c. believed absent	a. Maximum Daily Value		b. Max. 30-day Value (if available)		c. Long Term Avg. Value (if available)		d. No. of Analyses	a. Conc.	b. Mass	a. Long Term Avg. Value		b. No. of Analyses
				(1) Conc.	(2) Mass	(1) Conc.	(2) Mass	(1) Conc.	(2) Mass				(1) Conc.	(2) Mass	
29B. Di-N-Octyl Phthalate (117-84-0)	☒	☐	☐	<0.28						1	µg/L				
30B. 1,2-Diphenylhydrazine *(as Azobenzene)* (122-66-7)	☒	☐	☐	<0.23						1	µg/L				
31B. Fluoranthene (206-44-0)	☒	☐	☐	<0.008						1	µg/L				
32B. Fluorene (86-73-7)	☒	☐	☐	<0.011						1	µg/L				
33B. Hexachlorobenzene (118-74-1)	☒	☐	☐	<0.32						1	µg/L				
34B. Hexachlorobutadiene (87-68-3)	☒	☐	☐	<0.45						1	µg/L				
35B. Hexachlorocyclopentadiene (77-47-4)	☒	☐	☐	<0.7						1	µg/L				
36B. Hexachloroethane (67-72-1)	☒	☐	☐	<0.36						1	µg/L				
37B. Indeno *(1,2,3-cd)* Pyrene (193-39-5)	☒	☐	☐	<0.011						1	µg/L				
38B. Isophorone (78-59-1)	☒	☐	☐	<0.34						1	µg/L				
39B. Naphthalene (91-20-3)	☒	☐	☐	<0.034						1	µg/L				
40B. Nitrobenzene (98-95-9)	☒	☐	☐	<0.31						1	µg/L				
41B N-Nitrosodimethylamine (62-75-9)	☒	☐	☐	<0.33						1	µg/L				
42B. N-Nitrosodi-N-Propylamine (621-64-7)	☐	☐	☒												
43B. N-Nitrosodiphenylamine (86-30-6)	☒	☐	☐	<0.001						1	µg/L				
44B Phenanthrene (85-01-8)	☒	☐	☐	<0.014						1	µg/L				
45B. Pyrene (129-00-0)	☒	☐	☐	<0.008						1	µg/L				
46B. 1,2,4-Trichlorobenzene (120-82-1)	☒	☐	☐	<1.5						1	µg/L				
PESTICIDES/PCB COMPOUNDS															
1P. Aldrin (309-00-2)	☐	☐	☒												
2P. -BHC (319-84-6)	☐	☐	☒												
3P -BHC (319-85-7)	☐	☐	☒												
4P. -BHC (58-89-9)	☐	☐	☒												
5P. -BHC (319-86-8)	☐	☐	☒												

Facility ID. Number: FL0002208 Outfall No. EP-1E

1. Pollutant and CAS No. (if available)	2. Mark "X"			3. Effuent							4. Units		5. Intake (optional)		
	a. testing required	b. believed present	c. believed absent	a. Maximum Daily Value		b. Max. 30-day Value (if available)		c. Long Term Avg. Value (if available)		d. No. of Analyses	a. Conc.	b. Mass	a. Long Term Avg. Value		b. No. of Analyses
				(1) Conc.	(2) Mass	(1) Conc.	(2) Mass	(1) Conc.	(2) Mass				(1) Conc.	(2) Mass	
6P. Chlordane (57-74-9)	☐	☐	☒												
7P. 4,4'-DDT (50-29-3)	☐	☐	☒												
8P. 4,4'-DDE (72-55-9)	☐	☐	☒												
9P. 4,4'-DDD (72-54-8)	☐	☐	☒												
10P. Dieldrin (60-57-1)	☐	☐	☒												
11P. -Endosulfan (115-29-7)	☐	☐	☒												
12P. -Endosulfan (115-29-7)	☐	☐	☒												
13P. Endosulfan Sulfate (1031-07-8)	☐	☐	☒												
14P. Endrin (72-20-8)	☐	☐	☒												
15P. Endrin Aldehyde (7421-92-4)	☐	☐	☒												
16P. Heptachlor (76-44-8)	☐	☐	☒												
17P. Heptachlor Epoxide (1024-57-3)	☐	☐	☒												
18P. PCB-1242 (53469-21-9)	☐	☐	☒												
19P. PCB-1254 (11097-69-1)	☐	☐	☒												
20P. PCB-1221 (11104-28-2)	☐	☐	☒												
21P. PCB-1232 (11141-16-5)	☐	☐	☒												
22P. PCB-1248 (12672-29-6)	☐	☐	☒												
23P. PCB-1260 (11096-82-5)	☐	☐	☒												
24P. PCB-1016 (12674-11-2)	☐	☐	☒												
25P. Toxaphene (8001-35-2)	☐	☐	☒												

Facility ID. Number: FL0002208 Outfall No. I-008, EP-ISE/S

PLEASE PRINT OR TYPE ONLY: You may report some or all of this information on separate sheets instead of completing these pages. Use the same format. SEE INSTRUCTIONS.

VII. INTAKE AND EFFLUENT CHARACTERISTICS

PART A - You must provide the results of at least one analysis for every pollutant in this table. Complete one table for each outfall. See instructions for additional details.

1. Pollutant	2. Effluent							3.. Units		4. Intake (optional)		
	a. Max. Daily Value		b. Max. 30-day Value		c. Annual Avg. Value		d. No. of Analyses	a. Concentration	b. Mass	a. Long Term Avg. Value		b. No. of Analyses
	(1) Conc.	(2) Mass	(1) Conc.	(2) Mass	(1) Conc.	(2) Mass				(1) Conc.	(2) Mass	
a Carbonaceous Biochemical Oxygen Demand (CBOD)	1.6		2.22				2	mg/L				
b. Chemical Oxygen Demand (COD)	85.3						1	mg/L				
c. Total Organic Carbon (TOC)	9.19						1	mg/L				
d. Total Suspended Solids (TSS)	4						1	mg/L				
e. Total Nitrogen (as N)	0.148						1	mg/L				
f Total Phosphorus (as P)	0.061						1	mg/L				
g. Ammonia (as N)	0.097						1	mg/L				
h. Flow - actual or projected	Value 2.16		Value 1.92		Value 1.92		2	MGD		Value		
i. Flow - design	Value		Value		Value					Value		
j. Specific Conductivity	Value 2,990		Value		Value		1	µS/cm		Value		
k. Temperature (winter)	Value		Value		Value			°C		Value		
l. Temperature (summer)	Value 26		Value 26		Value		1	°C		Value		
m. . pH	Min. 7.3	Max 7.3	Min.	Max.			1	STANDARD UNITS				

PART B - Mark "X" in column 2a for each pollutant you know or have reason to believe is present. Mark "X" in column 2b for each pollutant you believe to be absent. If you mark column 2a for any pollutant which is limited either directly, or indirectly but expressly, in an effluent limitations guideline, you must provide the results of at least one analysis for that pollutant. For other pollutants for which you mark column 2a, you must provide quantitative data or an explanation of their presence in your discharge. Complete one table for each outfall. See the instructions for additonal details and requirements.

1. Pollutant and CAS No. (if available)	2. Mark "X"		3. Effluent							4. Units		5. Intake (optional)		
	a. believed present	b. believed absent	a. Maximum Daily Value		b. Max. 30-day Value (if available)		c. Long Term Avg. Value (if available)		d. No. of Analyses	a. Conc.	b. Mass	a. Long Term Avg. Value		b. No. of Analyses
			(1) Conc...	(2) Mass	(1) Conc.	(2) Mass	(1) Conc.	(2) Mass				(1) Conc.	(2) Mass	
a. Bromide (24949-67-9)	☒	☐	5.14						1	mg/L				
b. Chlorine, Total Residual	☒	☐	<0.01						1	mg/L				
c. Color	☒	☐	30						1	CU				
d. Fecal Coliform	☒	☐	90						1	CFU				
e. Fluoride (16984-48-8)	☒	☐	0.618						1	mg/L				
f. Nitrate-Nitrite (as N)	☒	☐	<0.074						1	mg/L				

: Item VII-B Contd.

Facility ID. Number FL0002208 Outfall No. I-008, EP-ISE/S

1. Pollutant and CAS No. (if available)	2. Mark "X"		3. Effluent							4. Units		5. Intake (optional)		
	a. believed present	b. believed absent	a. Maximum Daily Value		b. Max. 30-day Value (if available)		c. Long Term Avg. Value (if available)		d. No. of Analyses	a. Conc.	b. Mass	a. Long Term Avg. Value		b. No. of Analyses
			(1) Conc.	(2) Mass	(1) Conc.	(2) Mass	(1) Conc.	(2) Mass				(1) Conc.	(2) Mass	
g. Nitrogen, Total Organic (as N)	☒	☐	0.051						1	mg/L				
h. Oil and grease	☒	☐	<1.4						1	mg/L				
i. Phosphorus, Total (as P) (7723-14-0)	☒	☐	0.061						1	mg/L				
j. Radioactivity														
(1) Alpha, Total	☒	☐	<5.0 ± 4.4						1	pci/L				
(2) Beta, Total	☒	☐	34.6 ± 3.5						1	pci/L				
(3) Radium, Total	☐	☒												
(4) Radium 226, Total	☐	☒												
k. Sulfate (as SO_4) (14808-79-8)	☒	☐	144						1	mg/L				
l. Sulfide (as S)	☐	☒												
m. Sulfite (as SO_3) (14265-45-3)	☐	☒												
n. Surfactants	☒	☐	0.136						1	mg/L				
o. Aluminum, Total (7429-90-5)	☐	☒												
p. Barium, Total (7440-39-3)	☐	☒												
q. Boron, Total (7440-42-8)	☒	☐	0.281						1	mg/L				
r. Cobalt, Total (7440-48-4)	☐	☒												
s. Iron, Total (7439-89-6)	☒	☐	<0.045						1	µg/L				
t. Maagnesium, Total (7439-95-4)	☒	☐	50.6						1	mg/L				
u. Molybdenum, Total (7439-98-7)	☒	☐	0.079						1	µg/L				
v. Manganese, Total (7439-96-5)	☐	☒												
w. Tin, Total (7440-31-5)	☐	☒												
x. Titanium, Total (7440-32-6)	☒	☐	<0.006						1	mg/L				

Facility ID. Number: FL0002208 Outfall No. I-008, EP-ISE/S

PART C - If you are a primary industry and this outfall contains process wastewater, refer to Table 2c-2 in the instructions to determine which of the GC/MS fractions you must test for. Mark "X" in column 2a for all GC/MS fractions that apply to your industry and for ALL toxic metals, cyanides, and total phenols. If you are not required to mark column 2a (secondary industries, non-process wastewater outfalls, and non-required GC/MS fractions), mark "X" in column 2b for each pollutant you know or have reason to believe is present. Mark "X" in column 2c for each pollutant you believe is absent. If you mark column 2a for any pollutant, you must provide the results of at least one analysis for that pollutant. If you mark column 2b for any pollutant, you must provide the results of at least one anlysis for that pollutnat if you know or have reason to believe it will be discharged in concentrations of 10 ppb or greater. If you mark column 2b for acrolein, acrylonitrile, 2,4,dinitrophenol, or 2-methyl-4,6 dinitrophenol, you must provide the results of at least one analysis for each of these pollutants which you know or have reason to believe that you discharge in concentrations of 100 ppb or greater. Otherwise, for pollutants for which you mark column2b, you must either submit at least one analysis or briefly describe the reasons the pollutant is expected to be discharged. Note that there are 7 pages to this part; please review each carefully. Complete one table (all 7 pages) for each outfall. See instructions for additional details and requirements.

1. Pollutant and CAS No. (if available)	2. Mark "X"			3. Effluent							4. Units		5. Intake (optional)		
	a. testing required	b. believed present	c. believed absent	a. Maximum Daily Value		b. Max. 30-day Value (if available)		c. Long Term Avg. Value (if available)		d. No. of Analyses	a. Conc.	b. Mass	a. Long Term Avg. Value		b. No. of Analyses
				(1) Conc.	(2) Mass	(1) Conc.	(2) Mass	(1) Conc.	(2) Mass				(1) Conc.	(2) Mass	
METALS, CYANIDE, AND TOTAL PHENOLS															
1M. Antimony, Total (7440-36-0)	☒	☐	☐	<4						1	µg/L				
2M. Arsenic, Total (7723-14-0)	☒	☐	☐	<5						1	µg/L				
3M. Beryllium, Total (7440-41-7)	☒	☐	☐	<1						1	µg/L				
4M. Cadmium, Total (7440-43-9)	☒	☐	☐	<1						1	µg/L				
5M. Chromium, Total (7440-47-3)	☒	☐	☐	<1						1	µg/L				
6M. Copper, Total (7440-50-8)	☒	☐	☐	<10						1	µg/L				
7M. Lead, Total (7439-92-1)	☒	☐	☐	<3						1	µg/L				
8M. Mercury, Total (7439-97-6)	☒	☐	☐	<0.0002						1	µg/L				
9M. Nickel, Total (7440-02-0)	☒	☐	☐	<5						1	µg/L				
10M. Selenium, Total (7782-49-2)	☒	☐	☐	<5						1	µg/L				
11M. Silver, Total (7440-22-4)	☒	☐	☐	<2						1	µg/L				
12M. Thallium, Total (7440-28-0)	☒	☐	☐	<1						1	µg/L				
13M. Zinc, Total (7440-66-6)	☒	☐	☐	<5						1	µg/L				
14M. Cyanide, Total (57-12-5)	☒	☐	☐	1.8						1	µg/L				
15M. Phenols, Total	☒	☐	☐	<6						1	µg/L				
DIOXIN															
2,3,7,8-Tetra-chlorodibenzo-P-Dioxin (1764-01-6)	☐	☐	☒												
GC/MS FRACTION - VOLATILE COMPOUNDS															
1V. Acrolein (107-02-8)	☒	☐	☐	<2.47						1	µg/L				
2V. Acrylonitrile (107-13-1)	☒	☐	☐	<0.955						1	µg/L				

Facility ID. Number: FL0002208 Outfall No. I-008, EP-ISE/S

1. Pollutant and CAS No. (if available)	2. Mark "X"			3. Effluent							4. Units		5. Intake (optional)		
	a. testing required	b. believed present	c. believed absent	a. Maximum Daily Value		b. Max. 30-day Value (if available)		c. Long Term Avg. Value (if available)		d. No. of Analyses	a. Conc.	b. Mass	a. Long Term Avg. Value		b. No. of Analyses
				(1) Conc.	(2) Mass	(1) Conc.	(2) Mass	(1) Conc.	(2) Mass				(1) Conc.	(2) Mass	
GC/MS FRACTION - VOLATILE COMPOUNDS (continued)															
3V. Benzene (71-43-2)	☒	☐	☐	<0.173						1	µg/L				
4V. Bis (Chloromethyl) Ether (542-88-1)	☐	☐	☒												
5V. Bromoform (75-25-2)	☒	☐	☐	<0.418						1	µg/L				
6V. Carbon Tetrachloride (56-23-5)	☒	☐	☐	<0.213						1	µg/L				
7V Chlorobenzene (108-90-7)	☒	☐	☐	<0.245						1	µg/L				
8V. Chlorodi-bromomethane (124-8-1)	☒	☐	☐	<0.256						1	µg/L				
9V. Chloroethane (74-00-3)	☒	☐	☐	<0.34						1	µg/L				
10V. 2-Chloro-ethylvinyl Ether (110-75-8)	☒	☐	☐	<0.612						1	µg/L				
11V. Chloroform (67-86-3)	☒	☐	☐	<0.263						1	µg/L				
12V. Dichloro-bromomethane (75-24-4)	☒	☐	☐	<0.191						1	µg/L				
13V. Dichloro-difluoromethane (75-71-8)	☒	☐	☐	<0.414						1	µg/L				
14V. 1,1-Dichloroethane (75-34-3)	☒	☐	☐	<0.255						1	µg/L				
15V. 1,2-Dichloroethane (107-06-2)	☒	☐	☐	<0.338						1	µg/L				
16V. 1,1-Dichloroethylene (75-35-4)	☒	☐	☐	<0.269						1	µg/L				
17V. 1,2,-Dichloropropane (78-87-5)	☒	☐	☐	<0.326						1	µg/L				
18V. 1,3-Dichloropropylene (542-75-6)	☒	☐	☐	<0.249						1	µg/L				
19V. Ethylbenzene (100-41-4)	☒	☐	☐	<0.196						1	µg/L				
20V. Methyl Bromide (74-83-9)	☒	☐	☐	<0.61						1	µg/L				
21V. Methyl Chloride (74-87-3)	☒	☐	☐	<0.25						1	µg/L				
22V. Methylene Chloride (74-98-2)	☒	☐	☐	<1.0						1	µg/L				
23V. 1,1,2,2-Tetra-chloroethane (79-34-5)	☒	☐	☐	<0.715						1	µg/L				
24V. Tetrachloroethylene (127-18-4)	☒	☐	☐	<0.508						1	µg/L				

Facility ID. Number: FL0002208 Outfall No. I-008, EP-ISE/S

1. Pollutant and CAS No. (if available)	2. Mark "X"			3. Effluent							4. Units		5. Intake (optional)		
	a. testing required	b. believed present	c. believed absent	a. Maximum Daily Value		b. Max. 30-day Value (if available)		c. Long Term Avg. Value (if available)		d. No. of Analyses	a. Conc.	b. Mass	a. Long Term Avg. Value		b. No. of Analyses
				(1) Conc.	(2) Mass	(1) Conc.	(2) Mass	(1) Conc.	(2) Mass				(1) Conc.	(2) Mass	
GC/MS FRACTION - VOLATILE COMPOUNDS (Continued)															
25V. Toluene (108-88-3)	☒	☐	☐	<0.247						1	µg/L				
26V. 1,2-Trans-Dichloroethylene (156-60-5)	☒	☐	☐	<0.399						1	µg/L				
27V. 1,1,2-Trichloroethane (71-55-6)	☒	☐	☐	<0.288						1	µg/L				
28V. 1,1,2-Trichloroethane (79-00-5)	☒	☐	☐	<0.232						1	µg/L				
29V. Trichloroethylene (79-01-6)	☒	☐	☐	<0.305						1	µg/L				
30V. Trichloro-fluoromethane (75-69-4)	☒	☐	☐	<0.301						1	µg/L				
31V. Vinyl Chloride (75-01-4)	☒	☐	☐	<0.414						1	µg/L				
GC/MS FRACTION - ACID COMPOUNDS															
1A. 2-Chlorophenol (95-57-8)	☒	☐	☐	<0.224						1	µg/L				
2A. 2,4-Dichlorophenol (120-83-2)	☒	☐	☐	<0.432						1	µg/L				
3A. 2,4-Dimethylphenol (105-67-9)	☒	☐	☐	<0.396						1	µg/L				
4A. 4,6-Dinitro-O-Cresol (534-53-1)	☒	☐	☐	<0.353						1	µg/L				
5A. 2,4-Dinitrophenol (51-28-5)	☒	☐	☐	<1.4						1	µg/L				
6A. 2-Nitrophenol (88-75-5)	☒	☐	☐	<0.242						1	µg/L				
7A. 4-Nitrophenol (100-02-7)	☒	☐	☐	<0.786						1	µg/L				
8A P-Chloro-M-Cresol (59-50-7)	☒	☐	☐	<0.221						1	µg/L				
9A Pentachlorophenol (87-86-5)	☒	☐	☐	<0.672						1	µg/L				
10A Phenol (108-95-2)	☒	☐	☐	<0.41						1	µg/L				
11A 2,4,5-Trichloro-phenol (88-06-2)	☒	☐	☐	<0.38						1	µg/L				
GC/MS FRACTION - BASE/NEUTRAL COMPOUNDS															
1B. Acenaphthene (63-32-9)	☒	☐	☐	<0.27						1	µg/L				
2B. Acenaphtylene (208-96-8)	☒	☐	☐	<0.26						1	µg/L				
3B. Anthracene (120-12-7)	☒	☐	☐	<0.056						1	µg/L				
4B. Benzidine (92-87-5)	☒	☐	☐	<9.74						1	µg/L				

Facility ID. Number: FL0002208 Outfall No. I-008, EP-ISE/S

1. Pollutant and CAS No. (if available)	2. Mark "X"			3. Effluent							4. Units		5. Intake (optional)		
	a. testing required	b. believed present	c. believed absent	a. Maximum Daily Value		b. Max. 30-day Value (if available)		c. Long Term Avg. Value (if available)		d. No. of Analyses	a. Conc.	b. Mass	a. Long Term Avg. Value		b. No. of Analyses
				(1) Conc.	(2) Mass	(1) Conc.	(2) Mass	(1) Conc.	(2) Mass				(1) Conc.	(2) Mass	
5B. Benzo *(a)* Anthracene (56-55-3)	☒	☐	☐	0.18						1	µg/L				
6B. Benzo *(a)* Pyrene (50-32-8)	☒	☐	☐	<0.13						1	µg/L				
7B. 3,4-Benzo-fluoranthene (205-99-2)	☒	☐	☐	<0.15						1	µg/L				
8B. Benzo *(ghi)* Perylene (191-24-2)	☒	☐	☐	<0.14						1	µg/L				
9B. Benzo *(k)* Fluoranthene (207-08-9)	☒	☐	☐	0.12						1	µg/L				
10B. Bis *(2-Chloroethoxy)* Methane (111-91-1)	☒	☐	☐	<0.32						1	µg/L				
11B. Bis *(2-chloroethyl)* Ether (111-44-4)	☒	☐	☐	<0.46						1	µg/L				
12B. Bis *(2-Chloroisopropyl)* Ether (102-60-1)	☒	☐	☐	<0.34						1	µg/L				
13B. Bis *(2-Ethylhexyl)* Phthalate (117-81-7)	☒	☐	☐	0.35						1	µg/L				
14B. 4-Bromophenyl Phenyl Ether (101-55-3)	☒	☐	☐	<0.27						1	µg/L				
15B Butyl Benzyl Phthalate (84-68-7)	☒	☐	☐	<0.36						1	µg/L				
16B. 2-Chloronaphthalene (91-58-7)	☐	☐	☒												
17B. 4-Chlorophenyl Phenyl Ether (7005-72-3)	☒	☐	☐	<0.45						1	µg/L				
18B. Chrysene (218-01-9)	☒	☐	☐	0.18						1	µg/L				
19B. Dibenzo *(a,h)* Anthracene (53-70-3)	☒	☐	☐	<0.06						1	µg/L				
20B. 1,2-Dichlorobenzene (95-50-1)	☒	☐	☐	<0.34						1	µg/L				
21B. 1,3-Dichlorobenzene (541-73-1)	☒	☐	☐	<0.35						1	µg/L				
22B. 1,4-Dichlorobenzene (106-46-7)	☒	☐	☐	<0.28						1	µg/L				
23B. 3,3'-Dichlorobenzidine (92-94-1)	☒	☐	☐	<0.31						1	µg/L				
24B. Diethyl Phthalate (84-66-2)	☒	☐	☐	<0.33						1	µg/L				
25B. Dimethyl Phthalate (131-11-3)	☒	☐	☐	<0.31						1	µg/L				
26B. Di-N-Butyl Phthalate (84-74-2)	☒	☐	☐	0.52						1	µg/L				
27B. 2,4-Dinitrotoluene (121-14-2)	☒	☐	☐	<0.31						1	µg/L				
28B. 2,6-Dinitrotoluene (606-20-2)	☒	☐	☐	<0.31						1	µg/L				

Facility ID. Number: FL0002208 Outfall No. I-008, EP-ISE/S

1. Pollutant and CAS No. (if available)	2. Mark "X"			3. Effluent							4. Units		5. Intake (optional)		
	a. testing required	b. believed present	c. believed absent	a. Maximum Daily Value		b. Max. 30-day Value (if available)		c. Long Term Avg. Value (if available)		d. No. of Analyses	a. Conc.	b. Mass	a. Long Term Avg. Value		b. No. of Analyses
				(1) Conc.	(2) Mass	(1) Conc.	(2) Mass	(1) Conc.	(2) Mass				(1) Conc.	(2) Mass	
29B. Di-N-Octyl Phthalate (117-84-0)	☒	☐	☐	<0.28						1	µg/L				
30B. 1,2-Diphenylhydrazine *(as Azobenzene)* (122-66-7)	☒	☐	☐	<0.234						1	µg/L				
31B. Fluoranthene (206-44-0)	☒	☐	☐	<0.08						1	µg/L				
32B. Fluorene (86-73-7)	☒	☐	☐	<0.112						1	µg/L				
33B. Hexachlorobenzene (118-74-1)	☒	☐	☐	<0.32						1	µg/L				
34B. Hexachlorobutadiene (87-68-3)	☒	☐	☐	<0.45						1	µg/L				
35B. Hexachlorocyclopentadiene (77-47-4)	☒	☐	☐	<0.74						1	µg/L				
36B. Hexachloroethane (67-72-1)	☒	☐	☐	<0.36						1	µg/L				
37B. Indeno *(1,2,3-cd)* Pyrene (193-39-5)	☒	☐	☐	<0.26						1	µg/L				
38B. Isophorone (78-59-1)	☒	☐	☐	<0.34						1	µg/L				
39B. Naphthalene (91-20-3)	☒	☐	☐	<0.34						1	µg/L				
40B. Nitrobenzene (98-95-9)	☒	☐	☐	<0.31						1	µg/L				
41B N-Nitrosodimethylamine (62-75-9)	☐	☐	☒							1	µg/L				
42B. N-Nitrosodi-N-Propylamine (621-64-7)	☒	☐	☐	<0.1						1	µg/L				
43B. N-Nitro-sodiphenylamine (86-30-6)	☐	☐	☒												
44B Phenanthrene (85-01-8)	☒	☐	☐	<0.29						1	µg/L				
45B. Pyrene (129-00-0)	☒	☐	☐	<0.47						1	µg/L				
46B. 1,2,4-Trichlorobenzene (120-82-1)	☒	☐	☐	<0.23						1	µg/L				
[illegible]															
1P. Aldrin (309-00-2)	☐	☐	☒												
2P. -BHC (319-84-6)	☐	☐	☒												
3P -BHC (319-85-7)	☐	☐	☒												
4P. -BHC (58-89-9)	☐	☐	☒												
5P. -BHC (319-86-8)	☐	☐	☒												

Facility ID. Number: FL0002208 Outfall No. I-008, EP-ISE/S

1. Pollutant and CAS No. (if available)	2. Mark "X"			3. Effluent							4. Units		5. Intake (optional)		
	a. testing required	b. believed present	c. believed absent	a. Maximum Daily Value		b. Max. 30-day Value (if available)		c. Long Term Avg. Value (if available)		d. No. of Analyses	a. Conc.	b. Mass	a. Long Term Avg. Value		b. No. of Analyses
				(1) Conc.	(2) Mass	(1) Conc.	(2) Mass	(1) Conc.	(2) Mass				(1) Conc.	(2) Mass	
6P. Chlordane (57-74-9)	☐	☐	☒												
7P. 4,4'-DDT (50-29-3)	☐	☐	☒												
8P. 4,4'-DDE (72-55-9)	☐	☐	☒												
9P. 4,4'-DDD (72-54-8)	☐	☐	☒												
10P. Dieldrin (60-57-1)	☐	☐	☒												
11P. -Endosulfan (115-29-7)	☐	☐	☒												
12P. -Endosulfan (115-29-7)	☐	☐	☒												
13P. Endosulfan Sulfate (1031-07-8)	☐	☐	☒												
14P. Endrin (72-20-8)	☐	☐	☒												
15P. Endrin Aldehyde (7421-92-4)	☐	☐	☒												
16P. Heptachlor (76-44-8)	☐	☐	☒												
17P. Heptachlor Epoxide (1024-57-3)	☐	☐	☒												
18P. PCB-1242 (53469-21-9)	☐	☐	☒												
19P. PCB-1254 (11097-69-1)	☐	☐	☒												
20P. PCB-1221 (11104-28-2)	☐	☐	☒												
21P. PCB-1232 (11141-16-5)	☐	☐	☒												
22P. PCB-1248 (12672-29-6)	☐	☐	☒												
23P. PCB-1260 (11096-82-5)	☐	☐	☒												
24P. PCB-1016 (12674-11-2)	☐	☐	☒												
25P. Toxaphene (8001-35-2)	☐	☐	☒												

FDEP FORM 2F

APPLICATION FOR PERMIT TO DISCHARGE STORMWATER ASSOCIATED WITH INDUSTRIAL ACTIVITY

APPLICATION FORM 2F

PERMIT TO DISCHARGE STORMWATER ASSOCIATED WITH INDUSTRIAL ACTIVITY

FORM
2F

APPLICATION FOR PERMIT FOR STORMWATER DISCHARGE ASSOCIATED WITH INDUSTRIAL ACTIVITY

Facility I.D. Number: FL0002208

Please type or print in black ink. If additional space is needed for your answer, use plain sheets and attach to the application form.

I. Outfall Location:

For each outfall, list the latitude and longitude of its location to the nearest 15 seconds and the name of the receiving water.

A. Outfall Number (list)	B. Latitude			C. Longitude			D. Receiving Water (Name)
I-06B	27	20	52	80	14	57	Plant Intake Canal
I-06C	27	20	53	80	14	30	Mangrove Impoundment 8E

Improvements:

A. Are you now required by any Federal, State, or local authority to meet any implementation schedule for the construction, upgrading or operation of stormwater or wastewater treatment equipment or practices or any other environmental programs which may affect the discharges described in this application? This includes, but is not limited to, permit conditions, administrative or enforcement orders, enforcement compliance schedule letters, stipulations, court orders, and grant or loan conditions?

1. Identification of Conditions, Agreements	2. Affected Outfalls		3. Brief Description of Project	4. Final Compliance Date	
	No.	Source of Discharge		a. required	b. projected
N/A					

B. You may attach additional sheets describing any additional water pollution or other environmental projects which may affect your discharge that you now have underway or which you plan. Indicate whether each program is now underway or planned, and indicate your actual or planned schedules for construction.

III. Site Drainage Map:

Attach a site map showing topography depicting the facility including each of its intake and discharge structures; the drainage area of each stormwater outfall; paved areas and buildings within the drainage area of each stormwater outfall; each known past or present areas used for outdoor storage or disposal of significant materials; each existing structural control measure to reduce pollutants in stormwater runoff, materials loading and access areas, areas where pesticides, herbicides, soil conditioners and fertilizers are applied; each of its hazardous waste treatment, storage or disposal units; each well where fluids from the facility are injected underground; springs, and other surface water bodies which receive stormwater discharges from the facility. Show hazardous waste storage or disposal areas that do not require a RCRA permit separate from those which do require a permit.

Refer to Figures 1 and 4.

IV. Narrative Description of Pollutant Sources:

A. For each outfall, provide an estimate of the area (include units) of impervious surfaces, including paved areas and building roofs, drained to the outfall, and an estimate of the total surface area drained by the outfall.

Outfall No.	Area of Impervious Surface (units)	Total Area Drained (units)	Outfall No.	Area of Impervious Surface (units)	Total Area Drained (units)
I-06B	3,000 sq. ft.	25,600 sq. ft.	I-06C	596,800 sq. ft.	622,900 sq. ft.

B. Provide a narrative description of significant materials that are currently, or in the past three years have been, treated, stored or disposed in a manner that allows exposure to stormwater; method of treatment, storage, or disposal; past and present materials management practices employed to minimize contact with stormwater runoff; materials loading and access areas; and the location, manner, and frequency in which pesticides, herbicides, soil conditioners, and fertilizers are applied.

Refer to Attachment C.

C. For each outfall, provide the location and a description of existing structural and nonstructural control measures to reduce pollutants in stormwater runoff; and a description of the treatment the stormwater receives, including the schedule and type of maintenance for control and treatment measures and the ultimate disposal of any solid or fluid wastes other than by discharge.

Outfall No.	Treatment	Table 2F-1 Code
3	Area is sodded and paved for the reduction of solids. Former oil storage area; no longer used as lubricating oil storage area. No current industrial activities.	4-B
I-06C	Stormwater is routed to a nearby retention area for treatment as approved by SFWMD and FDEP.	1-V, 1-Y, 4-A

V. Non-stormwater Discharges:

A. I certify under penalty of law that the outfall(s) covered by this application have been tested or evaluated for the presence of non-stormwater discharges, and that all non-stormwater discharges from these outfall(s) are identified in either an accompanying DEP Form 62-620.910(5) or (7) (Forms 2CS or 2ES) application for the outfall.

Name and Official Title (type or print)	Signature	Date Signed
Richard L. Anderson, Vice President, St. Lucie Power Plant	[signature] FOR RLA	7/20/10

B. Provide a description of the method used, the date of any testing, and the onsite drainage points that were directly observed during a test.

A dry weather survey performed on July 8, 2010, showed no dry weather flows or discrepancies with the stormwater discharge system.

Facility I.D. Number: FL0002208

VI. Significant Leaks or Spills:

Provide existing information regarding the history of significant leaks or spills of toxic or hazardous pollutants at the facility in the last three years, including the approximate date and location of the spill or leak, and the type and amount of material released.

VII. Discharge Information:

A, B, C, & D: See instructions before proceeding. Complete one set of tables for each outfall. Annotate the outfall number in the space provided. Tables VII-A, VII-B, and VII-C are included on separate sheets numbered VII-1 and VII-2.

E. Potential discharges not covered by analysis - is any toxic pollutant listed in Table 2F-2, 2F-3, or 2F-4, a substance or a component of a substance which you currently use or manufacture as an intermediate or final product or by-product?

☐ Yes (list all such pollutants below) ☒ No (go to section VIII)

VIII. Biological Toxicity Testing Data

Do you have any knowledge or reason to believe that any biological test for acute or chronic toxicity has been made on any of your discharges or on a receiving water in relation to your discharge within the last 3 years?

☒ Yes (list results below) ☐ No (go to Section IX)

Ninety-six hour static renewal definitive toxicity tests were conducted as required by the current NPDES - FL0002208 Permit for D-001 on May 29, 2006, and September 6, 2007. The tests were conducted using Mysidopsis bahia and Menidia beryllina.

FDEP performed a similar test on April 10, 2010 as a part of the 5-year compliance performance testing.

The results for the three tests were satisfactory.

IX. Contract Analysis Information

Were any of the analysis reported in item VII performed by a contract laboratory or consulting firm?

☒ Yes (list the name, address, and telephone number of, and pollutants analyzed by each such laboratory or firm below) ☐ No (go to Section X)

A. Name	B. Address	C. Area Code & Phone No.	D. Pollutants Analyzed
FPL Central Lab #E56078	6001 A Village Blvd.	561-640-2010	Nitrate, nitrite, oil and grease, TSS
	West Palm Beach, FL		
Xenco Laboratories #E86240	3231 NW 7th Avenue		
	Boca Raton, FL	561-447-7373	Miscellaneous wet chemistry

Facility I.D. Number: FL0002208

X-A. CERTIFICATIONS FOR NEW OR MODIFIED FACILITIES

I certify that the engineering features of this pollution control project have been designed by me and found to be in conformity with sound engineering principles, applicable to the treatment and disposal of pollutants characterized in the permit application. There is reasonable assurance, in my professional judgment, that the pollution control facilities, when properly maintained and operated, will discharge an effluent that complies with all applicable statutes of the State of Florida and the rules of the Department. It is also agreed that the undersigned, if authorized by the owner, will furnish the applicant a set of instructions for the proper maintenance and operation of the pollution control facilities and, if applicable, pollution sources.

Signature

Name (please type):

(Affix Seal)

Company Name:

Address:

Florida Registration No.:

Telephone No.:

Date:

I certify under penalty of law that this document and all attachments were prepared under my direction or supervision in accordance with a system designed to assure that qualified personnel properly gather and evaluate the information submitted. Based on my inquiry of the person or persons who manage the system or those persons directly responsible for gathering the information, the information submitted is, to the best of my knowledge and belief, true, accurate, and complete. I am aware that there are significant penalties for submitting false information, including the possibility of fine and imprisonment for knowing violations.

Name & Official Title (type or print)

Signature

Telephone No. (area code & no.)

Date Signed

X-B. CERTIFICATIONS FOR PERMIT RENEWALS

I certify that the engineering features of this pollution control project have been examined by me and found to be in conformity with sound engineering principles, applicable to the treatment and disposal of pollutants characterized in the permit application. There is reasonable assurance, in my professional judgment, that the pollution control facilities, when properly maintained and operated, will discharge an effluent that complies with all applicable statutes of the State of Florida and the rules of the Department.

7/13/10

Signature

Joseph T. Dertien, P.E.

Name (please type):

(Affix Seal)

Golder Associates Inc.

Company Name:

Address: 6026 NW 1st Place
Gainesville, FL 32607

Florida Registration No.: 35500

Telephone No.: (352) 336-5600

Date: July 13, 2010

I certify under penalty of law that this document and all attachments were prepared under my direction or supervision in accordance with a system designed to assure that qualified personnel properly gather and evaluate the information submitted. Based on my inquiry of the person or persons who manage the system or those persons directly responsible for gathering the information, the information submitted is, to the best of my knowledge and belief, true, accurate, and complete. I am aware that there are significant penalties for submitting false information, including the possibility of fine and imprisonment for knowing violations.

Richard L. Anderson, Vice President, St. Lucie Power Plant

Name & Official Title (type or print)

772-467-7100

Telephone No. (area code & no.)

Signature

7/20/10

Date Signed

Facility I.D. Number: FL0002208

VII. Discharge Information (Continued from page 2F-15 of Form 2F) Outfall I-06B Former Oil Storage Area

Part A - You must provide the results of at least one analysis for every pollutant in this table. Complete one table for each outfall. See instructions for additional details.

Pollutant and CAS Number (if available)	Minimum Values (include units)		Average Values (include units)		# of Storm Events Sampled	Sources of Pollutants
	Grab Sample Taken During First 30 Minutes	Flow-weighted Composite	Grab Sample Taken During First 30 Minutes	Flow-weighted Composite		
Oil and Grease	<1.4 mg/L	N/A			1	
Biochemical Oxygen Demand (BOD_5)	<2 mg/L				1	
Chemical Oxygen Demand (COD)	32 mg/L				1	
Total Suspended Solids (TSS)	5.0 mg/L				1	
Total Kjeldahl Nitrogen	1.45 mg/L				1	
Nitrate + Nitrite Nitrogen	0.47 mg/L				1	
Total Phosphorus	0.176 mg/L				1	
pH	Minimum 7.4	Maximum	Minimum	Maximum	1	

Part B - List each pollutant that is limited in an effluent guideline which the facility is subject to or any pollutant listed in the facility's wastewater permit for its wastewater effluent if the facility is operating under an existing wastewater permit. Complete one table for each outfall. See instructions for additional details and requirements.

Pollutant and CAS Number (if available)	Minimum Values (include units)		Average Values (include units)		# of Storm Events Sampled	Sources of Pollutants
	Grab Sample Taken During First 30 Minutes	Flow-weighted composite	Grab Sample Taken During First 30 Minutes	Flow-weighted Composite		
N/A						

Facility I.D. Number: FL0002208

VII. Discharge Information (Continued from Table VII on page VII - 1 of Form 2F) Outfall I-06B Former Oil Storage Area

Part C - List each pollutant shown in Tables 2F-2, 2F-3, and 2F-4 that you know or have reasons to believe is present. Complete one table for each outfall. See instructions for additional details.

Pollutant and CAS Number (if available)	Minimum Values (include units)		Average Values (include units)		# of Storm Events Sampled	Sources of Pollutants
	Grab Sample Taken During First 30 Minutes	Flow-weighted Composite	Grab Sample Taken During First 30 Minutes	Flow-weighted Composite		
N/A						

Part D - Provide data for the storm event(s) which resulted in the maximum values for the flow weighted composite sample.

1. Date of Storm Event	2. Duration of Storm Event (in minutes)	3. Total rainfall during storm event (in inches)	4. Number of hours between beginning of storm measured and end of previous measurable rain event	5. Maximum flow rate during rain event (specify units)	6. Total flow from rain event (specify units)	7. Comments
5/24/10	25	0.15	120	90 gpm	0.0023 MG	

Provide a description of the method of flow measurement or estimate.
Part D.5. Maximum flow was determined from total flow averaged for duration of rainfall event which was at a relatively constant rate.

Part D.6. Total flow was estimated from area of drainage x rainfall x coefficient of runoff (0.98 for impervious area; 0.49 for pervious area).

Facility I.D. Number: FL0002208

VII. Discharge Information (Continued from page 2F-15 of Form 2F) Outfall I-06C East Parking Lot

Part A - You must provide the results of at least one analysis for every pollutant in this table. Complete one table for each outfall. See instructions for additional details.

Pollutant and CAS Number (if available)	Minimum Values (include units)		Average Values (include units)		# of Storm Events Sampled	Sources of Pollutants
	Grab Sample Taken During First 30 Minutes	Flow-weighted Composite	Grab Sample Taken During First 30 Minutes	Flow-weighted Composite		
Oil and Grease	<1.4 mg/L	N/A			1	
Biochemical Oxygen Demand (BOD_5)	3.39 mg/L				1	
Chemical Oxygen Demand (COD)	45.6 mg/L				1	
Total Suspended Solids (TSS)	33 mg/L				1	
Total Kjeldahl Nitrogen	1.41 mg/L				1	
Nitrate + Nitrite Nitrogen	0.14 mg/L				1	
Total Phosphorus	0.188 mg/L				1	
pH	Minimum 7.7	Maximum	Minimum	Maximum	1	

Part B - List each pollutant that is limited in an effluent guideline which the facility is subject to or any pollutant listed in the facility's wastewater permit for its wastewater effluent if the facility is operating under an existing wastewater permit. Complete one table for each outfall. See instructions for additional details and requirements.

Pollutant and CAS Number (if available)	Minimum Values (include units)		Average Values (include units)		# of Storm Events Sampled	Sources of Pollutants
	Grab Sample Taken During First 30 Minutes	Flow-weighted composite	Grab Sample Taken During First 30 Minutes	Flow-weighted Composite		
N/A						

Facility I.D. Number: FL0002208

VII. Discharge Information (Continued from Table VII on page VII - 1 of Form 2F) Outfall I-06C East Parking Lot

Part C - List each pollutant shown in Tables 2F-2, 2F-3, and 2F-4 that you know or have reasons to believe is present. Complete one table for each outfall. See instructions for additional details.

Pollutant and CAS Number (if available)	Minimum Values (include units)		Average Values (include units)		# of Storm Events Sampled	Sources of Pollutants
	Grab Sample Taken During First 30 Minutes	Flow-weighted Composite	Grab Sample Taken During First 30 Minutes	Flow-weighted Composite		
N/A						

Part D - Provide data for the storm event(s) which resulted in the maximum values for the flow weighted composite sample.

1. Date of Storm Event	2. Duration of Storm Event (in minutes)	3. Total rainfall during storm event (in inches)	4. Number of hours between beginning of storm measured and end of previous measurable rain event	5. Maximum flow rate during rain event (specify units)	6. Total flow from rain event (specify units)	7. Comments
5/24/10	25	0.15	120	2,200 gpm	0.0558 MG	

Provide a description of the method of flow measurement or estimate.
Part D.5. Maximum flow was determined from total flow averaged for duration of rainfall event, which was at a relatively constant rate.

Part D.6. Total flow was estimated from area of drainage x rainfall x coefficient of runoff (0.98 for impervious area; 0.49 for pervious area).

TABLES

TABLE 1
WATER QUALITY DATA SUMMARY FOR OUTFALL D-001

Month	Average Daily Flow[1] (MGD)	Temperature[1] (°F)	Temperature Difference Between Intake and Discharge[1] (°F)	Total Residual Oxidants[2] (mg/L)	Free Available Oxidants[3] (mg/L)		Chlorination Duration[4] (minutes)	
					Unit 1	Unit 2	Unit 1	Unit 2
2008								
January	1487.03	99	24	< 0.01			100	100
February	1487.03	99	23	< 0.01	0.21	0.31	100	100
March	1486.94	102	25	< 0.01			100	100
April	1486.94	103	26	< 0.01	0.12	0.07	100	100
May	1486.94	104	24	0.01			100	100
June	1487.03	105	25	0.01	0.08	0.09	100	100
July	1487.09	105	25	0.04			100	100
August	1486.94	108	24	0.03	0.11	0.17	100	100
September	1486.94	110	27	< 0.01			100	100
October	1487.03	107	24	< 0.01	0.04	0.08	100	100
November	1486.94	100	26	< 0.01			100	100
December	1487.12	99	28	< 0.01	0.09	0.10	100	100
2009								
January	1486.94	98	26	< 0.01			100	100
February	1486.94	96	27	0.04	0.23	0.16	100	100
March	1486.94	100	25	0.01			100	100
April	1486.94	101	25	< 0.01	0.20	0.22	100	100
May	780.48	101	22	0.01			100	100
June	1486.94	107	24	< 0.01	0.25	0.07	100	100
July	1486.94	106	23	0.05			100	100
August	1486.94	108	25	0.06	0.41	0.03	100	100
September	1487.16	109	24	0.01			100	100
October	1486.94	111	23	< 0.01	0.15	0.17	100	100
November	1486.94	107	23	< 0.01			100	100
December	1487.24	102	24	< 0.01	0.21	0.14	100	100
Average	1487	104	24	0.01	0.18	0.13	100	100

To compute average, non-detected values (i.e., <0.01) were included by assuming 1/2 of value or 0.005.

[1] Monitoring frequency: Hourly.
[2] Monitoring frequency: Continuous.
[3] Monitoring frequency: Bi-monthly.
[4] Monitoring frequency: Daily.

NA = Not Available.

Golder Associates

TABLE 2
WATER QUALITY DATA SUMMARY FOR LIQUID RADIATION WASTE
(INTERNAL OUTFALL I-003)

Month	Average Daily Flow[1] (MGD)		Total Suspended Solids[1] (mg/L)		Oil and Grease[2] (mg/L)	
	Daily Avg	Daily Max	Daily Avg	Daily Max	Daily Avg	Daily Max
2008						
January	0.0219	0.0273	< 3.0	< 3.0	NA	NA
February	0.0238	0.0272	< 3.0	< 3.0	NA	NA
March	0.0228	0.0280	< 3.0	4.3	NA	NA
April	0.0252	0.0285	< 3.0	< 3.0	NA	NA
May	0.0238	0.0296	< 3.0	< 3.0	NA	NA
June	0.0225	0.0282	< 3.0	5.2	2.0	2.0
July	0.0258	0.0285	< 3.0	< 3.0	NA	NA
August	0.0254	0.0298	< 3.0	< 3.0	NA	NA
September	0.0257	0.0297	< 3.0	< 3.0	NA	NA
October	0.0250	0.0304	< 3.0	3.0	NA	NA
November	0.0228	0.0282	< 3.0	< 3.0	NA	NA
December	0.0217	0.0281	< 3.0	< 3.0	NA	NA
2009						
January	0.0181	0.0192	< 3.0	3.0	5.6	5.6
February	0.0270	0.0276	< 3.0	< 3.0	NA	NA
March	0.0230	0.0284	< 3.0	3.0	NA	NA
April	0.0256	0.0280	< 3.0	< 3.0	NA	NA
May	0.0207	0.0300	< 3.0	< 3.0	NA	NA
June	0.0276	0.0304	< 3.0	< 3.0	NA	NA
July	0.0217	0.0260	< 3.0	3.0	NA	NA
August	0.0227	0.0240	< 3.0	< 3.0	NA	NA
September	0.0187	0.0292	< 3.0	< 3.0	NA	NA
October	0.0232	0.0244	< 3.0	< 3.0	NA	NA
November	0.0280	0.0360	< 3.0	< 3.0	NA	NA
December	0.0228	0.0272	< 3.0	< 3.0	NA	NA
2009 Average	0.0233	0.0275	<3.0	1.9	5.6	5.6
2-Year Average	0.0234	0.0281	<3.0	2	3.8	3.8

To compute average, non-detected values (i.e., <3.0) were included by assuming 1/2 of value or 1.5.

[1] Monitoring frequency: Once per batch.
[2] Monitoring frequency: Annually.

NA = Not Available.

TABLE 3
WATER QUALITY DATA SUMMARY FOR STEAM GENERATOR BLOWDOWN (INTERNAL OUTFALL I-005)

Month	Average Daily Flow (MGD)		Total Suspended Solids (mg/L)[1]		Oil and Grease (mg/L)		Hydrazine (mg/L)	Carbohydrazide (mg/L)
	Daily Avg	Daily Max	Daily Avg	Daily Max	Daily Avg	Daily Max		
2008								
January	0.2161	0.3456	< 3.0	< 3.0	< 1.4	< 1.4	NA	NA
February	0.1180	0.2880	5.0	5.0	< 1.4	< 1.4	NA	NA
March	0.1210	0.2304	< 3.0	3.0	< 1.4	< 1.4	NA	NA
April	0.2152	0.2700	< 3.0	< 3.0	< 1.4	< 1.4	NA	NA
May	NA	NA	NA	NA	NA	NA	NA	NA
June	0.1170	0.1968	< 3.0	< 3.0	< 1.4	< 1.4	NA	NA
July	0.0014	0.0014	< 3.0	< 3.0	< 1.4	< 1.4	NA	NA
August	0.1777	0.3456	< 3.0	< 3.0	< 1.4	< 1.4	NA	NA
September	NA	NA	NA	NA	NA	NA	NA	NA
October	0.0663	0.1728	6.8	12.0	< 1.4	< 1.4	NA	NA
November	0.1449	0.3456	5.0	14.0	< 1.4	< 1.4	0.000229	0.002095
December	0.1095	0.1380	< 3.0	< 3.0	< 1.4	< 1.4	NA	NA
2009								
January	NA	NA	NA	NA	NA	NA	NA	NA
February	NA	NA	NA	NA	NA	NA	NA	NA
March	0.2722	0.3456	3.0	3.0	< 1.4	< 1.4	NA	NA
April	0.1910	0.3456	< 3.0	5.0	< 1.4	< 1.4	NA	NA
May	0.1368	0.1840	< 3.0	< 3.0	< 1.4	< 1.4	0.046294	0.008417
June	0.2448	0.3456	< 3.0	3.0	< 1.4	< 1.4	0.008672	0.002196
July	0.1674	0.3492	< 3.0	< 3.0	< 1.4	< 1.4	0.009951	0.000266
August	0.1971	0.3456	< 3.0	< 3.0	< 1.4	< 1.4	NA	NA
September	0.1298	0.3456	< 3.0	3.0	< 1.4	< 1.4	0.002421	0.001608
October	NA	NA	NA	NA	NA	NA	NA	NA
November	NA	NA	NA	NA	NA	NA	NA	NA
December	NA	NA	NA	NA	NA	NA	NA	NA
2009 Average	0.1913	0.3230	<3.0	2.6	<1.4	<1.4	0.016835	0.003122
2-Year Average	0.1544	0.2703	2.3	3.6	<1.4	<1.4	0.013513	0.002916

[1]To compute average, non-detected values (i.e., <3.0) were included by assuming 1/2 of value or 1.5.
Monitoring frequency: once per discharge or weekly, whichever is more frequent.

NA = Not Available.

TABLE 4
WATER QUALITY DATA SUMMARY FOR FORMER OIL STORAGE AREA (INTERNAL OUTFALL I-06B)

Month	Average Daily Flow[1] (MGD)	Total Suspended Solids[1] (mg/L)	Oil and Grease[1] (mg/L)
2008			
January			
February			
March			
April			
May			
June			
July			
August			
September	0.0223	< 3.0	< 1.4
October			
November			
December			
2009			
January			
February			
March			
April			
May			
June			
July			
August			
September			
October			
November	0.0038	5.0	< 1.4
December			

[1]Monitoring frequency: Annually.

TABLE 5
WATER QUALITY DATA SUMMARY FOR EAST PARKING LOT
(INTERNAL OUTFALL I-06C)

Month	Average Daily Flow[1] (MGD)	Oil and Grease[1] (mg/L)
2008		
January		
February		
March		
April		
May		
June		
July		
August		
September	0.5208	< 1.4
October		
November		
December		
2009		
January		
February		
March		
April		
May		
June		
July		
August		
September		
October		
November	0.0893	< 1.4
December		

[1]Monitoring frequency: Annually.

TABLE 6
WATER QUALITY DATA SUMMARY FOR SOUTHEAST EVAPORATION PERCOLATION AREA (INTERNAL OUTFALL I-008)

Month	Average Daily Flow (MGD)		Total Suspended Solids (mg/L)		Oil and Grease (mg/L)	
	Daily Avg	Daily Max	Daily Avg	Daily Max	Daily Avg	Daily Max
2008						
January	NA	NA	NA	NA	NA	NA
February	NA	NA	NA	NA	NA	NA
March	NA	NA	NA	NA	NA	NA
April	NA	NA	NA	NA	NA	NA
May	NA	NA	NA	NA	NA	NA
June	NA	NA	NA	NA	NA	NA
July	NA	NA	NA	NA	NA	NA
August	14.25	14.25	5.5	12.0	< 1.4	< 1.4
September	1.012	1.117	15.0	18.0	< 1.4	< 1.4
October	1.27	1.29	3.0	3.0	< 1.4	< 1.4
November	1.2	1.2	3.0	3.0	< 1.4	< 1.4
December	NA	NA	NA	NA	NA	NA
2009						
January	NA	NA	NA	NA	NA	NA
February	NA	NA	NA	NA	NA	NA
March	NA	NA	NA	NA	NA	NA
April	NA	NA	NA	NA	NA	NA
May	1.92	2.16	16.0	16.0	< 1.4	< 1.4
June	NA	NA	NA	NA	NA	NA
July	NA	NA	NA	NA	NA	NA
August	NA	NA	NA	NA	NA	NA
September	NA	NA	NA	NA	NA	NA
October	NA	NA	NA	NA	NA	NA
November	NA	NA	NA	NA	NA	NA
December	NA	NA	NA	NA	NA	NA
2009 Average	1.92	2.16	16	16	<1.4	<1.4
2-Year Average	3.93	4	8.5	10.4	<1.4	<1.4

Monitoring frequency: Weekly.

NA = Not Available.

FIGURES

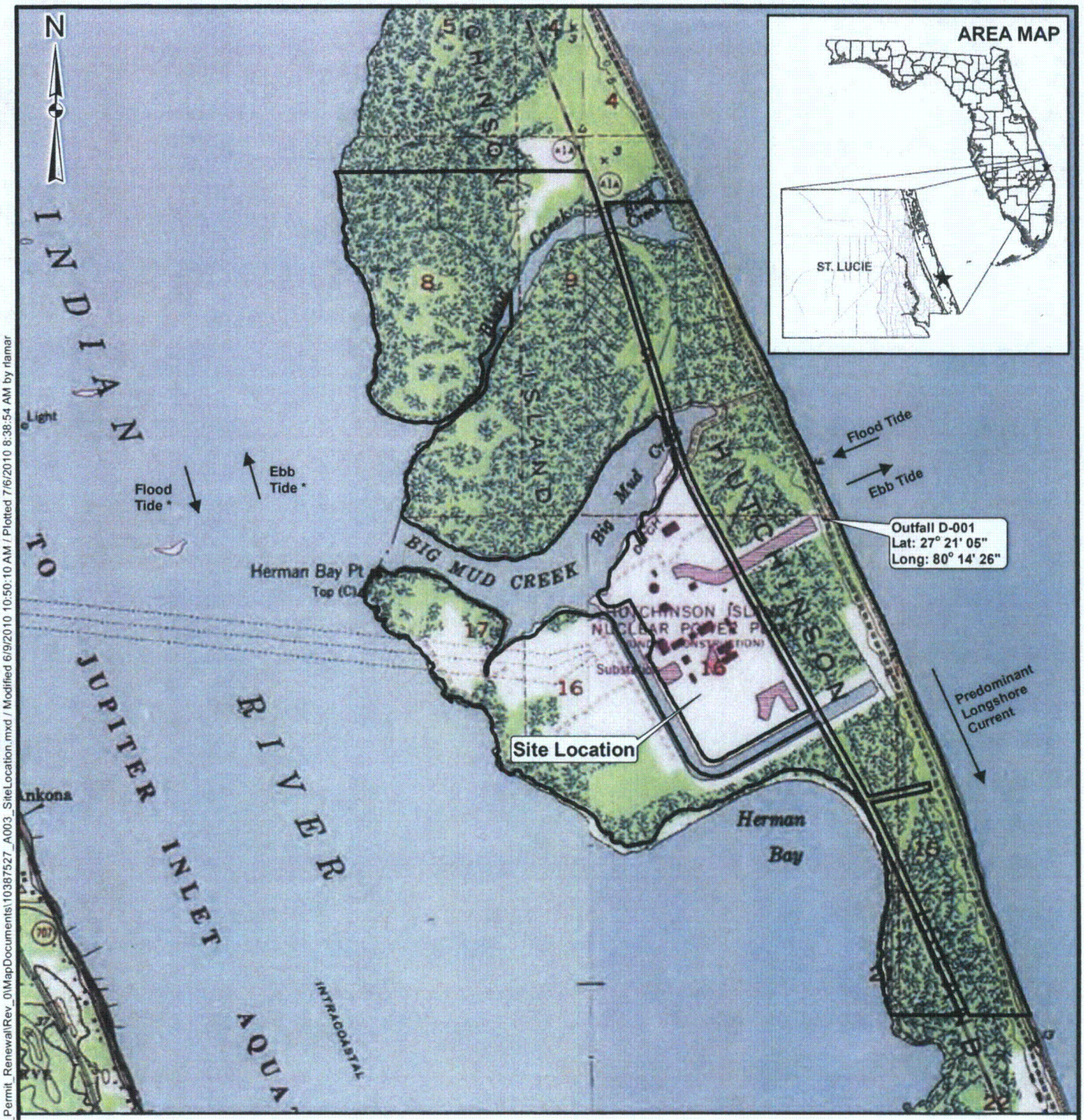

LEGEND

Property Boundary

NOTES

* Estimated flood and ebb tide flow directions due to proximity to Ft. Pierce Inlet in contrast to St. Lucie Inlet.

REFERENCES

1. Quad Map, Ankona 183 Quad, Eden 1983 Quad, USGS 7.5 Min. Quad T36S, R41E.

REV.	DATE	DES	REVISION DESCRIPTION	GIS	CHK	RVW

PROJECT

FPL ST. LUCIE POWER PLANT

TITLE

SITE LOCATION

Golder Associates
Gainesville, Florida

PROJECT No.		103-87527	FILE No.	10387527_A003
DESIGN	JTD	6/2/2010	SCALE: AS SHOWN	REV. 0
GIS	NRL	7/6/2010		
CHECK	JTD	7/6/2010		
REVIEW	XXX	8/13/2008		

FIGURE 1

Map Document: G:\PROJECTS\2010\103-87527_FPL_StLucie\WWF_Permit_Renewal\Rev_0\MapDocuments\10387527_A003_SiteLocation.mxd / Modified 6/9/2010 10:50:10 AM / Plotted 7/6/2010 8:38:54 AM by rlamar

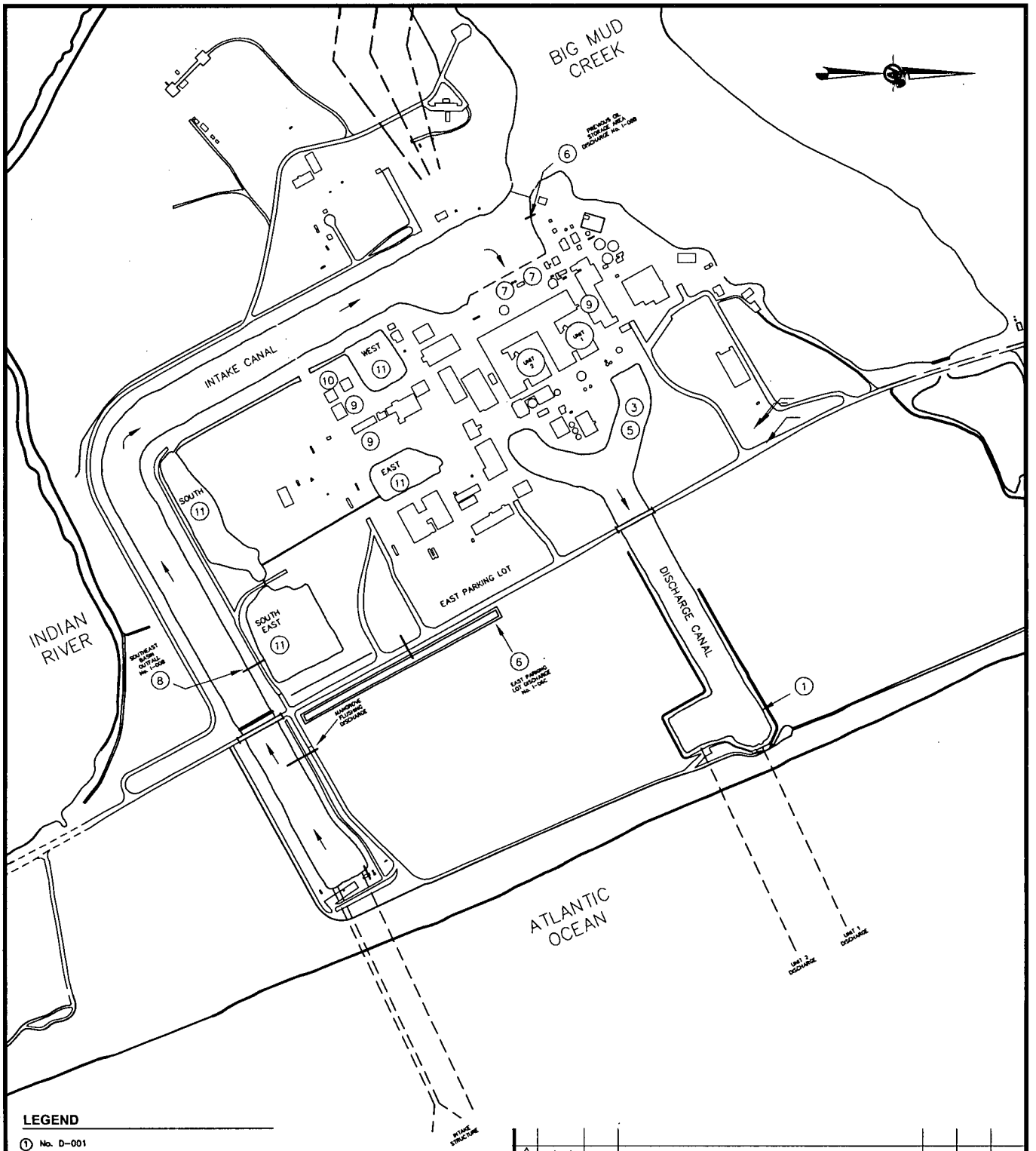

LEGEND

1. No. D-001
3. LOW VOLUME WASTE-LIQUID RADIATION WASTE No. I-003
5. LOW VOLUME WASTE-STEAM GENERATOR BLOWDOWN No. I-005
6. NON-EQUIPMENT STORMWATER DRAINS No. I-06B & No. I-06C
7. INTAKE SCREEN WASH No. I-007
8. SOUTHEAST EVAPORATION/PERCOLATION BASIN OUTFALL No. I-008
9. HAZARDOUS WASTE SATELLITE ACCUMULATION AREA
10. HAZARDOUS WASTE SATELLITE ACCUMULATION AREA
11. EVAPORATION/PERCOLATION BASINS

REFERENCES

1. FPL, 2009.

REV	DATE	DES	REVISION DESCRIPTION	CADD	CHK	RVW
1	07/14/10	JTD	UPDATE SITE PLAN	NRL	JTD	JTD

PROJECT

FPL ST. LUCIE POWER PLANT

TITLE

SITE PLAN AND OUTFALL LOCATION MAP

Golder Associates
Gainesville, Florida

PROJECT No.		103-87527	FILE No.	10387527_A001
DESIGN	JTD	06/02/10	SCALE 1" : ~750'	REV. 1
CADD	NRL	06/04/10		
CHECK	JTD	06/09/10		
REVIEW				

FIGURE 2

Drawing file: 10387527_A001_Rev1_SitePlan.dwg Jul 14, 2010 - 1:00pm

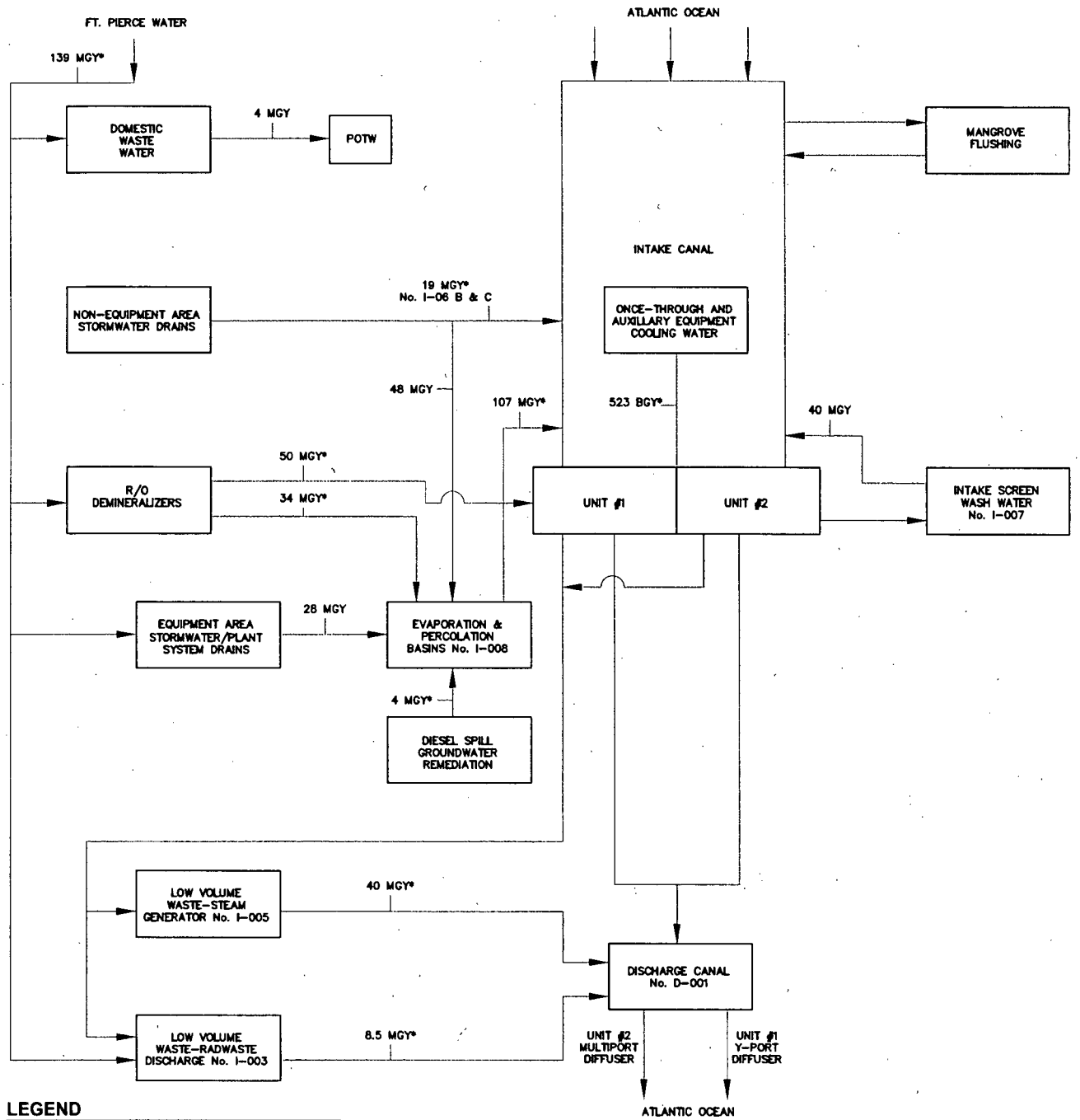

LEGEND

MGY: MILLION GALLONS PER YEAR

BGY: BILLION GALLONS PER YEAR

NOTE

AVERAGE/ESTIMATED FLOWS BASED ON 2003, 2008-2009 PROCESS DATA AND AVERAGE RAINFALL

* BASED ON 2008-2009 PROCESS DATA. OTHER VALUES FROM 2003 PROCESS DATA.

REFERENCES

1. FPL, 2010

REV	DATE	DES	REVISION DESCRIPTION	CADD	CHK	RVW
1	07/12/10	JTD	UPDATE PROCESS FLOW DIAGRAM	NRL	JTD	JTD

PROJECT

FPL ST. LUCIE POWER PLANT

TITLE

INDUSTRIAL WASTEWATER PROCESS FLOW DIAGRAM

Golder Associates
Gainesville, Florida

PROJECT No.	103-87527		FILE No.	10387527_A002
DESIGN	JTD	06/02/10	SCALE AS SHOWN	REV. 1
CADD	NRL	06/04/10		
CHECK	JTD	06/09/10		
REVIEW				

FIGURE 3

Drawing file: 10387527_A002_Rev1_IWWF_FlowDiagram.dwg Jul 12, 2010 - 2:09pm

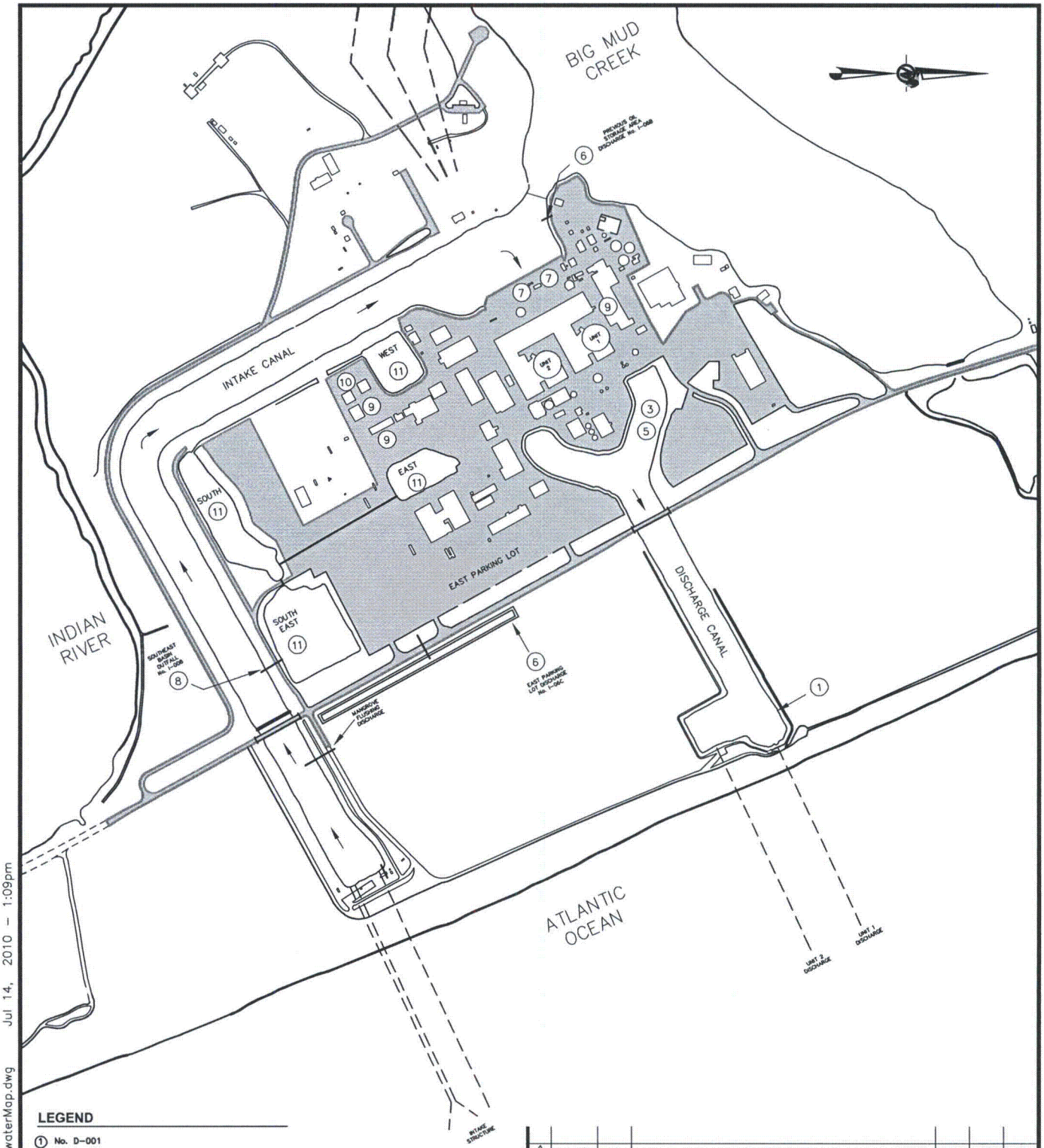

LEGEND

1. No. D-001
3. LOW VOLUME WASTE–LIQUID RADIATION WASTE No. I-003
5. LOW VOLUME WASTE–STEAM GENERATOR BLOWDOWN No. I-005
6. NON-EQUIPMENT STORMWATER DRAINS No. I-06B & No. I-06C
7. INTAKE SCREEN WASH No. I-007
8. SOUTHEAST EVAPORATION/PERCOLATION BASIN OUTFALL No. I-008
9. HAZARDOUS WASTE SATELLITE ACCUMULATION AREA
10. HAZARDOUS WASTE 90-DAY ACCUMULATION AREA
11. EVAPORATION/PERCOLATION BASINS

REFERENCES

1. FPL, 2009.

REV	DATE	DES	REVISION DESCRIPTION	CADD	CHK	RVW
1	07/14/10	JTD	UPDATE STORMWATER MAP	NRL	JTD	JTD

PROJECT

FPL ST. LUCIE POWER PLANT

TITLE

STORMWATER MAP

Golder Associates
Gainesville, Florida

PROJECT No.		103-87527	FILE No.	10387527_A004
DESIGN	JTD	06/02/10	SCALE 1" : ~750'	REV. 1
CADD	NRL	06/04/10		
CHECK	JTD	06/09/10		
REVIEW				

FIGURE 4

Drawing file: 10387527_A004_Rev1_StormwaterMap.dwg Jul 14, 2010 – 1:09pm

ATTACHMENT A

SUPPLEMENTAL INFORMATION FOR FORM 2CS

ATTACHMENT A
SUPPLEMENTAL INFORMATION FOR FORM 2CS

FORM 2CS, ITEM IV.B. (p. 2CS-17)
GENERAL DESCRIPTION OF MAJOR PROCESSES
AND ASSOCIATED WASTE STREAMS

The St. Lucie Power Plant is located on Hutchinson Island in St. Lucie County, at latitude 27°20'54" and longitude 80°14'44", approximately 12 miles north of Stuart, Florida. The 1,132-acre plant site is located near the midpoint of Hutchinson Island, as shown on Figure 1.

The plant site contains two nuclear power units (Unit 1 and Unit 2), both 840-megawatt (MW) net facilities using pressurized water reactors. Construction, design, and operation are relatively the same for both units. Both units share common once-through cooling water intake and discharge canals. Separate ocean intake and discharge pipes withdraw from and discharge to the Atlantic Ocean via the canals. Individual ocean discharge pipes may be isolated independently depending on the number of units operating. Refer to Figure 2 for the locations of the outfalls.

There are three ocean intake structures for Unit 1 and Unit 2. The intake structures in the Atlantic Ocean contain vertical sections to prevent sanding and velocity caps to minimize entrainment of marine organisms. Horizontal entrance velocities at the velocity cap boundaries are estimated to be approximately 0.4 foot per second (fps) for the two 12-diameter intake pipes and 1 fps for the 16-ft intake pipe.

The wastewater discharges from the St. Lucie Power Plant include once-through cooling water, steam generator blowdown, liquid radiation waste, intake screen wash wastewater, and stormwater associated with industrial activity, which includes a discharge location from the Southeast Evaporation/Percolation Basin. Equipment area floor drains are routed to oily waste separation systems prior to ultimate discharge to the East and West stormwater basins. (Refer to Form 2CG for details). The West Basin and East Basin flow into the South Basin, which overflows to the Southeast Basin. The Southeast Basin discharges to the Intake Canal during periods of heavy rainfall, which could potentially damage important plant equipment. Figure 2 shows the location of these basins as well as the outfall discharge points. One other point source discharge, mangrove flushing water, is not an outfall discharge.

Mangrove Flushing Water

In order to enhance the growth of isolated mangrove trees located on the east side of the plant and bounded by the plant discharge canal, State Road A1A, and the plant intake canal, seawater is pumped from the intake canal on a seasonal basis onto the discharge canal side of the mangrove area. This

seawater is allowed to gravity flow back toward the intake canal. At the discharge pipe into the intake canal, stop logs are used to regulate water level in the mangrove area and simulate flushing that would naturally occur due to tidal action. The flushing and water level control are optimized to help control mosquito growth. At the proper time, the stop logs are removed and the uncontaminated seawater is returned to the intake canal. In a letter from Bruce Barrett, dated August 11, 1987, EPA concurred that "... such a discharge would not require an NPDES permit."

Once Through Cooling Water and Auxiliary Cooling Water (D-001)

The plant uses a total of eight circulating water pumps (four per unit) having a design total capacity of 974,600 gallons per minute (gpm) or 1.4 billion gallons per day (BGD) to supply once-through cooling water to Units 1 and 2. The once-through condenser and auxiliary cooling water systems discharge to the Atlantic Ocean via pipelines. One discharge pipe is equipped with a Y-port diffuser that discharges approximately 1,500 feet (ft) from shore. The other discharge pipe has a multi-port diffuser (58 ports), each port being 16 inches in diameter. The length of the multi-port diffuser is 1,416 ft starting 1,959 ft from shore and having a 24-ft spacing between ports. The diffuser manifold is optimized with ports alternately oriented north and south at an angle of 25 degrees from the manifold. The discharge of heated water through the Y-port and multi-port diffusers ensures distribution over a wide area and enables a more rapid and efficient mixing with ambient water.

Two other minor effluent streams are the refueling water storage tank and the non-aerated water hold-up tanks. These two effluent streams are discharged to the radwaste system for further reduction of radioactivity. The refueling water storage tank, whose contents are used for safety injection and refueling water, contains 500,000 gallons of water with a 2,000 parts per million (ppm) boron content. There are four 40,000-gallon non-aerated water storage tanks per unit that hold reactor coolant bleed-off or drain down water. Both of these discharges occur infrequently.

The once-through cooling water system is chlorinated at a maximum of 2 hours per day per unit for micro- and macro-biofouling control. FPL uses mechanical condenser tube cleaning systems on both units. These systems have sponge balls that are approximately 23 millimeters (mm) in diameter, which are forced through the condenser tubes. Approximately 1,800 sponge balls are applied at one time per condenser waterbox. There are four waterboxes per condenser on each unit. The sponge balls scrub the tubes as they pass through. Downstream of the condensers, the sponge balls are captured by a ball strainer. The ball strainers have grills with 5-mm spacings that prevent the balls from passing through the waterbox outlets and into the plant discharge system. The ball strainer grills funnel the sponge balls to pipes on the side of the strainer housings where the balls are sucked out of the circulating water flow by a recirculating pump. The sponge balls pass through the recirculating pump to the ball collectors. Ft. Pierce City water is used for seal water for the recirculation pumps at approximately 3.5 gpm. The

sponge balls normally pass through the ball collectors and are returned to the inlet side of the condensers for another cycle through the condensers. When the sponge balls begin to wear out, they are collected in the ball collector. The recirculating pump is shut down and the worn out balls are removed and new balls added to the ball collector.

The facility employs best management practices for the control of sponge ball loss to the environment from the tube cleaning systems. For example, sponge balls are inventoried and sponge ball loss to the environment is reported to FDEP on an annual basis.

In addition to once-through cooling, up to 58,000 gpm (84 MGD) of ocean cooling water is pumped using auxiliary cooling water pumps through the auxiliary equipment heat exchangers. The solution being cooled by these heat exchangers, which in turn directly cools in-plant machinery, contains approximately 200 to 500 ppm of sodium molybdate, 200 to 500 ppm of sodium nitrite, and 10 to 30 ppm of tolytriazole. Normally this part of the system is closed, recirculating similar to an automobile cooling system. If a leak occurred in a heat exchanger, a small amount of the molybdate solution could be released. The water level in this system is carefully monitored so leaks can be identified and repairs made. Due to the large volume being discharged to the common discharge canal through the "open" part of the cooling water system, it is anticipated that these minor leaks would not be detectable at the heat exchanger outlet and consequently would not be detectable at the POD in the discharge canal. Low-level chlorination is applied to the auxiliary cooling water.

Liquid Radwaste System Batch Releases: I-003

The flow from the radwaste treatment system is intermittent. The system permits a maximum estimated flow of 250 gpm. This waste stream originates from various maintenance and operational activities that take place in the reactor auxiliary building (RAB) and is processed for radioactive reduction by ion exchange resins and low micron filtration systems. Effluent from this system rarely contains any metal cleaning wastes and is discharged to the Intake Canal.

Steam Generator Blowdown: I-005

High purity make-up water is generated at the facility by a water treatment plant using activated carbon filtration, reverse osmosis, and ion exchange demineralization. Much of this high quality water is routed to the secondary system and steam generators as makeup for the water/steam cycle. Ammonium hydroxide is infrequently added for pH control and hydrazine is added for oxygen removal. Undesirable constituents such as chlorides from condenser leaks can impact the steam generator water. Strict operating specifications require that suspended and dissolved solids be maintained at very low levels; therefore, to keep the constituents at these low levels, a continuous steam generator blowdown is

blowdown is either recovered and recirculated or routed to the discharge canal. The concentration of hydrazine in these discharges during plant operation normally ranges from 25 parts per billion (ppb) to 2 ppm.

During overhauls and/or refueling outages the steam generators, feedwater systems, and/or condensers may be placed in a static mode where the internal metal surfaces of these components must be protected from corrosion. The typical method used is to fill the system with a hydrazine/carbohydrazide/ demineralized water solution. This solution, which contains up to 300 ppm hydrazine, must then be drained and discharged to the plant's discharge canal. In addition, various amine solutions such as ethanolamine (ETA) and dimethylamine (DMA) are introduced for pH control of the condensate and feedwater. These discharges normally occur approximately every 18 months per unit during refueling operations or during any periods of extended maintenance.

FPL monitored the discharge canal extensively at EPA's request from 1989 to 1993 during periods of "wet lay-up" discharge. Due to the rapid breakdown of hydrazine upon exposure to oxygen in the environment and through dilution, the hydrazine concentrations were found to be between <5 ppb and 16 ppb at the POD with most of the values being <5 ppb (the detection limit for hydrazine).

Intake Traveling Screen Wash Water: I-007

Two 1060-gpm capacity traveling screen wash pumps for both Units 1 and 2 at the intake structure withdraw ocean water for traveling screen cleaning. The traveling screens are used to prevent debris from reaching the condensers. One pump (the other standby) is normally in operation on each unit for 2 hours per day, at an average wash flow of 900 gpm per unit. The wash water is returned to the intake canal through a collection sump and drain system.

Other Processes Generating Wastewater

There are two waste streams at the St. Lucie Power Plant that are not a function of electrical generation operating activities:

- Non-equipment area stormwater runoff
- Outfall from Southeast Evaporation/Percolation Basin

Non-equipment Area Stormwater Runoff: I-006

Two non-equipment area stormwater discharges exist to the cooling water intake canal or mangrove impoundments. These streams originate from areas of the plant such as roadways, parking lots, and building storm drains.

Outfall from Southeast Evaporation/Percolation Basin: I-008

FPL maintains an intermittent discharge from the Southeast Evaporation/Percolation Basin to the plant intake canal. This discharge is used when rainfall runoff results in basin water levels that would impede plant operating equipment. The discharge is operated via a removable pump that is only operated when a high water level exists in the basin. A staff gauge in the basin is checked daily and when levels are such that a discharge becomes necessary, the pump is activated and the discharge is monitored for flow rate and required chemical parameters. Based on past experience and average rainfall conditions, this discharge is weather-dependent and is estimated to occur approximately two to three times per year.

SIGNIFICANT MATERIALS

The following narrative excludes those areas and facilities included in Forms 2CS and 2CG permit applications. For the remaining plant areas, no significant materials are currently, or in the past 5 years have been, treated, stored, or disposed in a manner that would be exposed to storm water. Company management practices to minimize contact of significant materials with storm water runoff include the storage of chemicals, pesticides, fertilizers, and herbicides in original containers within buildings and sheds. In addition, used oil is collected and stored in a storage tank. Liquid hazardous wastes are collected in sealed drums at satellite accumulation areas. Once the drums are full, they are relocated to the hazardous material storage area, which has secondary containment.

Pesticides, herbicides, and fertilizers are used at the facility on an as-needed basis in accordance with the manufacturers' guidelines.

FORM 2CS, ITEM IV.D. (p. 2CS-19)

Item IV.D. Describe practices to be followed to ensure adequate wastewater treatment during emergencies such as power loss and equipment failures causing shutdown of pollution abatement equipment of the proposed/permitted facilities.

In the event of a power loss resulting in the shutdown of pollution abatement equipment or the failure of such equipment, the facility is capable of preventing the discharge of pollutants offsite.

Most treatment system components are "passive" in nature and are, therefore, not impacted by power failures. Pumps are the exception. In many instances, dual pumps are used for system redundancy. In addition, the plant maintenance department staff is "on-call" 24 hours a day for maintenance and repair of equipment.

All power losses to the facility are managed with a high priority. Any loss of power is usually brief and should not affect waste treatment to any significant degree.

FORM 2CS, ITEM IV.E. (p. 2CS-19)

Item IV.E. List the method(s) and location(s) of flow measurement.

A listing of the methods of flow calculation for the outfalls that discharge to surface waters is shown below.

Outfall	Purpose	Flow Measurement Method
D-001	Condenser Once-Through and Auxiliary Equipment Cooling Water	Pump design flow and pump run times
I-003	Liquid radiation waste	Tank volume calculated prior to each batch discharge
I-005	Steam generator blowdown	Flow indicating control valve
I-007	Intake screen wash	Pump design flow and pump run times
I-008	Discharge from SE evaporation/percolation basin	Pump design flow and pump run times

FORM 2CS, NOTES FOR TABLE VII-B (p. VII-1)

Effluent data summary tables are provided in the Tables section.

Average concentrations are based on samples collected from May 6 to June 10, 2010.

ATTACHMENT B

SUPPLEMENTAL INFORMATION FOR FORM 2CG

ATTACHMENT B
SUPPLEMENTAL INFORMATION FOR FORM 2CG

FORM 2CG, ITEM IIIA (p. 2CG-15)

PLANT FACILITIES AND GENERAL SETTING

The St. Lucie Plant is located on Hutchinson Island about 7 miles southeast of the city of Fort Pierce in St. Lucie County, Florida (Figure 1). The plant is owned by the Florida Power & Light Company (FPL) and has been in operation since 1976. Two 850-megawatt nominal rating nuclear units at the site share once-through cooling water intake and discharge canals (Figure 2). Four Evaporation/Percolation Basins, located south of the power block area (Figure 2), discharge to groundwater at the plant site. These basins are constructed in the native soils and are unlined. They receive non-nuclear related wastewater and stormwater runoff.

The plant property is bounded on the east by the Atlantic Ocean and on the west by the Indian River. Privately-owned land is adjacent to the respective boundaries of the site located approximately 1 mile north and south of the plant power block (Figure 1). The Atlantic Ocean and the Indian River surround Hutchinson Island and dominate its hydrologic setting. The island is surrounded by a mangrove swamp along the Indian River and by a beach-sand dune complex along the Atlantic Coast.

Two aquifers exist below the mainland as well as Hutchinson Island: the unconfined surficial aquifer and the underlying Floridan aquifer. The nonartesian surficial aquifer occurs within the Anastasia Formation, which is composed principally of sand with thin lenses of cemented shell, limestone, or sandstone, and extends to a depth of approximately 150 feet (ft). This aquifer is separated from the deeper Floridan aquifer by the Hawthorne Formation, principally composed of sandy clay. This formation forms an aquiclude, approximately 450 to 650 ft thick, preventing hydrologic interaction between the two aquifers. The Floridan aquifer is artesian in this portion of Florida and consists of permeable limestone beds, the top of which occurs at an approximate depth of 600 and 800 ft.

Groundwater at the site is currently classified as G-II. A thin lens of "fresh" water does occur on Hutchinson Island, although it is almost nonexistent during dry periods when no recharge is taking place. Only the residents of a few older homes occasionally use the shallow island groundwater for nonpotable purposes.

Since the limited "fresh" water from the surficial aquifer is not potable and most of the aquifer contains saltwater, FPL purchases potable water from the City of Fort Pierce. Residents living in the northern part of Hutchinson Island receive their water via a pipeline from the City of Fort Pierce. Residents living in the southern part of the island receive their water via a pipeline from the city of Stuart. Condominiums

located more than a mile south of the plant site are known to have wells in the Floridan aquifer at depths greater than 600 ft. Water from these wells is high in chloride; consequently, a reverse osmosis system is used to purify it for potable use.

EVAPORATION/PERCOLATION POND DESCRIPTION

The evaporation/percolation pond system consists of four unlined basins that receive equipment/non-equipment related stormwater as well as discharges from certain plant systems. Most of the flow is initially received by the East and West Basins via the plant storm drainage system. The East and West Basins overflow via underground piping and a drainage trench, respectively, to the South Basin. The South Basin is, in turn, connected to the Southeast Basin by a short culvert. All four basins are unlined, with compacted sloped berms. Bottom sediments of all the basins generally consist of natural organics and sand. The entire system is designed to accommodate an average of approximately 14 million gallons (MG) of water per month.

The West Basin receives drainage from the west side of the plant, including the secondary system floor drains of each unit, and support areas. The basin is rectangular in shape, with a surface area of approximately 75,000 sq. ft. Average depth is approximately 20 ft, resulting in an operating capacity of about 11.2 MG. Overflow to the South Basin is protected by a floating boom.

The East Basin receives drainage from the east side of the plant, including the radiation control area and miscellaneous support areas. The basin is irregular in shape, with a surface area of approximately 77,000 sq. ft. Average depth is approximately 8 ft., resulting in an operating capacity of 4.6 MG. Overflow to the South Basin is protected by a floating boom.

The South Basin receives overflow from the East and West Basins and has a long, rectangular shape, with a surface area of approximately 105,000 sq. ft. Average depth is approximately 8 ft., resulting in an operating capacity of 6.3 MG. This basin is connected to the Southeast Basin by a short culvert.

The Southeast Basin is irregular in shape, with a surface area of approximately 160,000 sq. ft. Basin depth varies considerably, but is estimated to average 4 ft., which results in an operating capacity of 4.8 MG. A discharge outfall is permitted from this basin to the plant's intake canal. This outfall is used when local rainfall amounts result in pond levels that threaten plant operating equipment. This discharge is manually controlled by pumping to the intake canal during periods when pond levels are above normal basin operating levels. The pump is removed when it is not in operation.

There are three sample locations for the four basins: EP-1W, EP-1E, and EP-ISE/S. The corresponding sample locations for the basins are EP-1W for the West Basin, EP-1E for the East Basin, and EP-1SE/S for the Southeast Basin and South Basin. The latter sample point is located at the Southeast Basin

("SE"), but the sample label includes reference to the South Basin ("S") because the South Basin discharges to the Southeast Basin. Overall, the West Basin and East Basin drain separately to the South Basin which in turn drains to the Southeast Basin. A summary of the sampling locations in relation to the basins is stated below:

Basin	Discharges to	Sample Location	Sample Label
West	South Basin	West Basin	EP-1W
East	South Basin	East Basin	EP-1E
South	Southeast Basin	Southeast Basin	EP-1SE/S (a/k/a I-008)
Southeast	Outfall I-008	Southeast Basin	EP-1SE/S (a/k/a I-008)

HYDROLOGIC SETTING

The plant proper is essentially constructed on an "island within an island" where intake and discharge canals filled with flowing water from the Atlantic Ocean isolate it on the south, west, and north while the ocean forms the boundary on the east. The intake canal provides the plant with cooling water via two pipes that extend seaward, while the discharge canal carries heated cooling water to the ocean via two discharge pipes (Figure 2). The volume of saltwater flowing through the cooling canals is approximately 1,480 MGD with all pumps operating. Big Mud Creek to the north, Herman Bay to the south, and the Indian River to the west are the other natural saltwater bodies that surround the plant site (Figure 1).

A study provided by Technos Inc. (1984) indicated the following about the site:

- Isolated hydrologically from any off-site "fresh" water by natural saltwater bodies and the intake and discharge canals
- Completely underlain by intruding saltwater at shallow depths
- Any discharge to groundwater from the unlined basins on the plant "island" is intercepted by the intake canal and discharged to the Atlantic Ocean

The Technos study also indicated that discharges from the unlined basins at the plant area are isolated and cannot possibly influence any "fresh" water outside of the St. Lucie Power Plant boundaries. Furthermore, shallow groundwater is not used as a source of potable water at the plant nor by residents living on Hutchison Island. It was further concluded that the deeper Floridan aquifer would not be affected by plant discharges because it is isolated by:

- Approximately 135 ft or more of saltwater underlying the St. Lucie Power Plant site
- 450 to 650 ft of sandy clay that forms an aquiclude
- Upward artesian pressure in the Floridan aquifer, which prevents recharge from the plant site

Based upon these observations, a groundwater monitoring plan has not been required for the facility due to:

- Plant's location in an area isolated by saltwater, where groundwater is considered nonpotable
- Any plant discharge would be intercepted by the ocean water cooling canals and discharged to the ocean

FORM 2CG, ITEM IIIB (p. 2CG-15)

MAJOR WASTE STREAMS TO GROUND WATER

Equipment/Non-Equipment Stormwater

This waste stream is associated with rainfall at the plant site that is carried to the East and West Basins via the plant storm drainage system. Average rainfall results in approximately 0.2 MGD on average to each of these basins. Drainage from areas subject to oil contamination is routed through oil/water separators or oil traps prior to discharge to the basins.

Plant System Drainage

This waste stream is associated mainly with the plant secondary side discharges such as steam jet air ejector, gland seal exhaust, pump seal leakoff as well as wet lay-up activities. Also included are auxiliary cooling heat exchanger drains, seawater strainer backwashes, diesel fuel tank containment area stormwater, as well as miscellaneous cleaning/washdown activities. This waste results in an average of about 0.110 MGD, which is routed mainly to the West Basin. Here again, drainage from areas subject to oil contamination is routed through oil/water separators or oil traps prior to discharge to the basins.

Reverse Osmosis Reject Water

This waste stream is associated with intermittent plant demineralized make-up water. The reverse osmosis (RO) make-up water treatment system, rated at 500 gpm, is used to provide demineralized makeup water to the plant. This system is fed directly from the City of Ft. Pierce water supply at a typical flow rate of 100 gpm. The RO waste stream, or reject, is routed to the West Basin. In 2008-2009, this discharge resulted in approximately 0.09 MGD (34 MG per year) of flow to the West Basin.

Note: A groundwater treatment system is in service to remediate a diesel fuel spill in the radiation control area. It was permitted by SFWMD and placed in service in 1995. This system discharges approximately 0.014 MGD of treated groundwater to the East Basin.

FORM 2CG, ITEM IIID (p. 2CG-16)

Describe practices to be followed to ensure adequate wastewater treatment during emergencies such as power loss and equipment failures causing shutdown of pollution abatement equipment of the proposed/permitted facilities.

In the event of a power loss resulting in the shutdown of pollution abatement equipment of the failure of such equipment, the facility is capable of preventing the discharge of pollutants off-site.

Most treatment system components are "passive" in nature and are, therefore, not impacted by power failures. Pumps are the exception. In many instances, dual pumps are used for system redundancy. In addition, the plant maintenance department staff is "on-call" 24 hours a day for maintenance and repair of equipment.

All power losses to the facility are managed with a high priority. Any loss of power is usually brief and should not affect waste treatment to any significant degree.

FORM 2CG, ITEM IIIE (p. 2CG-16)

Average flows to the Evaporation/Percolation Basins are estimated as follows:

Equipment/Non-Equipment Stormwater

Average flows to these basins are estimated based on the average rainfall and contributing drainage area.

Plant System Drainage

Average flows are based on the amount of make-up water added to the plant systems, drainage rates from various plant systems, and estimates of evaporation losses to the atmosphere in the form of steam.

Reverse Osmosis Reject Discharge

Average flows are based on the amount of make-up water added to the plant systems from the RO unit.

ATTACHMENT C

SUPPLEMENTAL INFORMATION FOR FORM 2F

ATTACHMENT C
SUPPLEMENTAL INFORMATION FOR FORM 2F

FORM 2F, ITEM IVB (p. 2F-15)

SIGNIFICANT MATERIALS

The following narrative excludes those areas and facilities included in Forms 2CS and 2CG permit applications. For the remaining plant areas, no significant materials are currently, or in the past 5 years have been, treated, stored, or disposed in a manner that would be exposed to storm water. Company management practices to minimize contact of significant materials with storm water runoff include the storage of chemicals, pesticides, fertilizers, and herbicides in original containers within buildings and sheds. In addition, used oil is collected and stored in a storage tank. Liquid hazardous wastes are collected in sealed drums at satellite accumulation areas. Once the drums are full, they are relocated to the hazardous material storage area, which has secondary containment.

Pesticides, herbicides, and fertilizers are used at the facility on an as-needed basis in accordance with the manufacturers' guidelines.