Westinghouse

Westinghouse Electric Company
Nuclear Power Plants
P.O. Box 355
Pittsburgh, Pennsylvania 15230-0355
USA

U.S. Nuclear Regulatory Commission
ATTENTION: Document Control Desk
Washington, D.C. 20555

Direct tel: 412-374-6206
Direct fax: 724-940-8505
e-mail: sisk1rb@westinghouse.com

Your ref: Docket Number 52-006
Our ref: DCP_NRC_003010

August 17, 2010

Subject: AP1000 Standard COL Technical Report Submittal of APP-GW-GLR-026, Revision 5 (TR44)

Westinghouse is submitting Revision 5 of AP1000 Standard Combined License Technical Report Number 44 (TR44), "New Fuel Storage Rack Structural/Seismic Analysis." The purpose of this report is to complete and document, on a generic basis, activities required for COL Information Item 9.1-1 in the AP1000 Design Control Document (DCD).

This revision incorporates changes made in response to additional NRC questions in August 2010, finalized responses to RAIs, and changes to reflect the unlikelihood of new fuel assembly drop accidents. Pursuant to 10 CFR 50.30(b), APP-GW-GLR-026, Revision 5, "New Fuel Storage Rack Structural/Seismic Analysis," (TR44) is submitted as Enclosure 1.

This report is submitted in support of the AP1000 Design Certification Amendment Application (Docket No. 52-006). The information provided in this report is generic and is expected to apply to all Combined Operating License (COL) applicants referencing the AP1000 Design Certification and the AP1000 Design Certification Amendment Application.

Questions or requests for additional information related to the content and preparation of this report should be directed to Westinghouse. Please send copies of such questions or requests to the prospective applicants for combined licenses referencing the AP1000 Design Certification. A representative for each applicant is included on the cc: list of this letter.

Very truly yours,

D. A. Lindgren / FOR

Robert Sisk, Manager
Licensing and Customer Interface
Regulatory Affairs and Strategy

0632ljb.doc

D063
NRO

/Enclosure

1. APP-GW-GLR-026, Revision 5, August 2010, "New Fuel Storage Rack Structural/Seismic Analysis," (TR44)

cc:	D. Jaffe	-	U.S. NRC	1E
	E. McKenna	-	U.S. NRC	1E
	P. Buckberg	-	U.S. NRC	1E
	T. Spink	-	TVA	1E
	P. Hastings	-	Duke Power	1E
	R. Kitchen	-	Progress Energy	1E
	A. Monroe	-	SCANA	1E
	P. Jacobs	-	Florida Power & Light	1E
	C. Pierce	-	Southern Company	1E
	E. Schmiech	-	Westinghouse	1E
	G. Zinke	-	NuStart/Entergy	1E
	R. Grumbir	-	NuStart	1E
	P. Loza	-	Westinghouse	1E

ENCLOSURE 1

APP-GW-GLR-026 (TR44)

Revision 5

"New Fuel Storage Rack Structural/Seismic Analysis"

F-3.4.1-2 Rev. 0

AP1000 RECORD OF CHANGES

AP1000 DOCUMENT NO. APP-GW-GLR-026 REVISION 5

ALTERNATE DOC. NO. N/A

DESIGN AGENT ORGANIZATION Westinghouse Electric Co. LLC

TITLE New Fuel Storage Rack Structural/Seismic Analysis

CHANGE NUMBER	PARAGRAPH NUMBER	CHANGE DESCRIPTION AND REASON	ENGINEER APPROVAL/DATE
1	Section 2.8.5	Revised for clarification of New Fuel Assembly Drop being an unlikely event	SMS/See EDMS
2	Section 2.9	Conclusions updated to reflect unlikely fuel drop scenario.	SMS/See EDMS
3	Table 2-3	Revised to reflect unlikely fuel drop scenario. Revised notes in Service Level column.	SMS/See EDMS

August 2010

AP1000 Standard Combined License Technical Report

New Fuel Storage Rack Structural/Seismic Analysis

Westinghouse Electric Company LLC
P.O. Box 355
Pittsburgh, PA 15230-0355

© 2010 Westinghouse Electric Company LLC
All Rights Reserved

TABLE OF CONTENTS

LIST OF TABLES 5

LIST OF FIGURES 6

1 INTRODUCTION 7
2 TECHNICAL BACKGROUND 8
2.1 DESIGN 8
2.1.1 AP1000 New Fuel Storage Rack and Vault Description 8
2.2 METHODOLOGY 9
2.2.1 Acceleration Time Histories 9
2.2.2 Modeling Methodology 10
2.2.3 Simulation and Solution Methodology 13
2.2.4 Conservatisms Inherent in Methodology 14
2.3 KINEMATIC AND STRESS ACCEPTANCE CRITERIA 14
2.3.1 Introduction 14
2.3.2 Kinematic Criteria 14
2.3.3 Stress Limit Criteria 14
2.3.4 Stress Limits for Various Conditions Per ASME Code 15
2.3.5 Dimensionless Stress Factors 17
2.4 ASSUMPTIONS 18
2.5 INPUT DATA 18
2.5.1 Rack Data 18
2.5.2 Structural Damping 19
2.5.3 Material Data 19
2.6 COMPUTER CODES 19
2.7 ANALYSES 19
2.7.1 Acceptance Criteria 19
2.7.2 Dynamic Simulations 19
2.8 RESULTS OF ANALYSES 19
2.8.1 Time History Simulation Results 19
2.8.2 Rack Structural Evaluation 21
2.8.3 Dead Load Evaluation 23
2.8.4 Local Stress Considerations 23
2.8.5 New Fuel Assembly Drop Accidents 24
2.8.6 Stuck Fuel Assembly Evaluation 24
2.9 CONCLUSIONS 24
3 REGULATORY IMPACT 43
4 REFERENCES 44

LIST OF TABLES

Table 2-1 AP1000 New Fuel Storage Rack Storage Cell Description 26
Table 2-2 Simulation Listing 26
Table 2-3 Loading Combinations for AP1000 New Fuel Storage Rack 27
Table 2-4 AP1000 New Fuel Storage Rack Module and Fuel Data 28
Table 2-5 Material Data (ASME - Section II, Part D) 29
Table 2-6 Results Summary(1) 30
Table 2-7 Deleted (combined with Table 2-6) 31
Table 2-8 Deleted (combined with Table 2-6) 31
Table 2-9 Maximum Pedestal and Cell Wall Stress Factors 31
Table 2-10 Baseplate-to-Cell Weld Maximum Stresses(1) 31
Table 2-11 Deleted (combined with Table 2-10) 31
Table 2-12 Baseplate-to-Pedestal Weld Maximum Stresses(1) 32
Table 2-13 Cell-to-Cell Weld Maximum Stresses 32
Table 2-14 Pedestal Thread Shear Stress 32
Table 2-15 Computer Codes Used for Analysis 33
Table 2-16 Degrees of Freedom for Single Rack Dynamic Model 34
Table 2-17 Results from Stuck Fuel Assembly Evaluation 34

LIST OF FIGURES

Figure 2-1 Configuration of New Fuel Storage Rack (Sheet 1 of 2) 35
Figure 2-1 Configuration of New Fuel Storage Rack (Sheet 2 of 2) 36
Figure 2-2 Schematic Diagram of Dynamic Model for DYNARACK 37
Figure 2-3 Rack-to-Pit Wall Impact Springs 38
Figure 2-4 Fuel-to-Rack Impact Springs at Level of Rattling Mass 39
Figure 2-5 Two-Dimensional View of Spring-Mass Simulation 40
Figure 2-6 Rack Degrees-of-Freedom for X-Y Plane Bending with Shear and Bending Spring 41
Figure 2-7 Partially Loaded Layout Configuration for Run Number 4 42

1 INTRODUCTION

This report summarizes the structural/seismic analysis of the AP1000 New Fuel Storage Rack. Revision one specifically addresses three items: changes to the design; reanalysis of the new fuel rack for the envelope of hard rock and soil conditions as documented in Reference 24; and supplemental information added as a result of U.S. Nuclear Regulatory Commission (NRC) Requests for Additional Information (RAIs). Revision two incorporates finalized responses to additional NRC RAIs. Revision three reconciles the existing seismic analysis of the AP1000 New Fuel Storage Rack with the updated seismic input that is associated with the shield building enhancement and the correction of the SASSI model. Revision three also incorporates general administrative changes to address additional comments from the NRC and to clarify the report. Revision four incorporates finalized responses to NRC RAIs and audit comments. Also, Table 2-6, and Table 2-9 to Table 2-14 were updated to reflect corrections made to existing seismic analysis. The Section 2.8.5 discussion of new fuel assembly drop accidents and associated tables and figures were revised to clarify the design basis that credits use of the single failure proof hoist and load path equipment to eliminate explicit postulated dropping of a new fuel assembly. The AP1000 New Fuel Storage Rack is used to temporarily store fresh fuel assemblies until they are loaded into the reactor core. The requirements for this analysis are identified in the AP1000 Design Control Document (DCD), subsection 9.1.1.2.1 (Reference 1). The completion of this analysis is identified as Combined Operating License (COL) Information Item 9.1-1 (Final Safety Evaluation Report [Reference 2] Action Item 9.1.6-1) in DCD subsection 9.1.6 to be completed by the Combined License applicant.

> COL Information Item 9.1-1: "Perform a confirmatory structural dynamic and stress analysis for the new fuel rack, as described in AP1000 DCD subsection 9.1.1.2.1."

This COLA Technical Report addresses COL Information Item 9.1-1. The calculation "AP1000 New Fuel Storage Rack Structural/Seismic Analysis" (Reference 3) is available for U. S. NRC audit.

A summary of the criticality analysis for the AP1000 New Fuel Storage Rack is presented in AP1000 Standard Combined License Technical Report, "New Fuel Storage Rack Criticality Analysis" (Reference 4).

2 TECHNICAL BACKGROUND

This report considers the structural adequacy of the proposed AP1000 New Fuel Storage Rack under postulated loading conditions. Analyses and evaluations follow the NRC Standard Review Plan 3.8.4, Revision 1 (Reference 6). Although the licensing basis for the AP1000 design invokes NRC SRP 3.8.4, Revision 1, an evaluation has been performed to confirm that the stress analysis of the new fuel rack also satisfies the applicable provisions of NRC SRP 3.8.4, Revision 2 (Reference 25). The dynamic analyses use a time-history simulation code used in numerous previous fuel rack licensing efforts in the United States and abroad. This report provides a discussion of the method of analyses, modeling assumptions, key evaluations, and results obtained to establish the margins of safety. The objective of this report is to develop the loads on the AP1000 New Fuel Storage Rack and confirm that the loads do not pose a threat to the stored fuel assemblies.

2.1 DESIGN

2.1.1 AP1000 New Fuel Storage Rack and Vault Description

The configuration of the AP1000 New Fuel Storage Rack is shown in Figure 2-1 and an overview of the construction and materials used in the AP1000 New Fuel Storage Rack is presented in Tables 2-1, 2-4, and 2-5.

The AP1000 New Fuel Storage Rack is freestanding and sits inside a concrete room (vault) in the Auxiliary Building. It consists of an 8x9 array of storage cells, which provides 72 total storage locations. A vault lid is provided for security, and for Foreign Material Exclusion (FME).

The individual storage cells of the AP1000 New Fuel Storage Rack are centered on a nominal pitch of 10.9 inches. Each storage cell consists of an inner stainless steel box, which has a nominal inside dimension of 8.8 inches and is 0.075 inches thick. Metamic® poison panels are attached to the outside surfaces of all storage cells except for the outside cell walls directly facing the north and south walls of the vault. No poison panels are required on these outside cell faces since there is only a small amount of space between the rack and storage vault concrete such that a fuel assembly cannot be inadvertently placed in this area. However, poison panels are placed on the outside cell faces in the east and west directions (see Figure 2-1 for the orientation of the rack within the pit) to mitigate the effects of an inadvertent placement of a fuel assembly outside of the rack, but within the vault on these two sides if the vault lid is ever removed. Each Metamic poison panel is held in place and is centered on the surface of the stainless steel box by an outer stainless steel sheathing panel. There is a small void space between the sheathing and the Metamic panel. The Metamic poison panels are nominally 7.5 inches wide by 0.106 inches thick. The external sheathing panels are 0.075 inches thick, and the internal sheathing panels are 0.035 inches thick.

Each storage cell is nominally 199.5 inches long, and it rests on top of a base plate whose top is 5 inches above the new fuel vault floor. Note that each Metamic poison panel is 172 inches long, overlapping the 168-inch active fuel length. The Metamic poison material is a mixture of B_4C, nominally 31.0 weight percent, and aluminum, nominally 69.0 weight-percent.

2.2 METHODOLOGY

2.2.1 Acceleration Time Histories

The response of a freestanding rack module to seismic inputs is highly nonlinear, and it involves a complex combination of motions (sliding, rocking, twisting, and turning), resulting in impacts and frictional effects. Linear methods, such as modal analysis and response spectrum techniques, cannot accurately replicate the response of such a highly nonlinear structure to seismic excitation. An accurate simulation is obtained only by direct integration of the nonlinear equations of motion using actual vault slab acceleration time-histories as the forcing function. Therefore, the initial step in AP1000 New Fuel Storage Rack qualification is to develop synthetic time-histories for three orthogonal directions that comply with the guidelines of the U.S. NRC Standard Review Plan 3.7.1, Revision 2 (Reference 7). The synthetic time-histories must meet the criteria of statistical independence, envelope the target design response spectra, and envelope the target Power Spectral Density function associated with the target response spectra.

The design basis AP1000 Nuclear Island Floor Response Spectra (FRS) were developed by Westinghouse in Reference 30 (which provides technical input for Reference 24), and these spectra envelope the hard rock and soil cases. The specific FRS for the AP1000 New Fuel Storage Rack was selected by Westinghouse from the data contained in Reference 30 and was transmitted to Holtec International in Reference 18. The synthetic time-histories for the "New Fuel" FRS (which is the name given to the specific FRS that was determined by Westinghouse to be applicable for the seismic analysis of the AP1000 New Fuel Storage Rack) were generated by Holtec International and form the basis of the seismic analysis performed in Reference 3. The ASB116.5 C. ROOM FRS contained in Reference 30 represent the standard grouping of enveloped response spectra for the Auxiliary and Shield Building (ASB) at Elevation 116.5 feet near the Control Room area for a range of soil/rock conditions. Reference 30 also contains additional data points at Elevation 116.5 feet; therefore, the ASB locations nearest the four corners of the New Fuel Vault at Elevation 116.5 feet were grouped and enveloped to develop the "New Fuel" FRS. The floor of the New Fuel Vault is at a slightly higher elevation (Elevation 118'-2.5") but the dynamic response is essentially the same as at Elevation 116.5 feet.

The acceleration time histories for the "New Fuel" Floor Response Spectra (FRS) noted above are used as the input motion for the seismic analysis of the new fuel rack and form the design and licensing basis. Three orthogonal components are input and solved simultaneously together with a constant 1-g gravity acceleration. The generation of these acceleration time histories is documented in Reference 31.

Updated seismic input for the AP1000 New Fuel Storage Rack, which incorporates the shield building design enhancements as well as the correction of the SASSI model, was made available in May 2010 via Reference 33 (which is based on the data contained in Reference 32, which provides technical input for Reference 36) and was transmitted to Holtec International in Reference 35. This new input has been evaluated and shown to generally result in similar or lower loads on the New Fuel Storage Rack when compared to the current design and licensing basis seismic input. There is one instance where the maximum load that resulted from the most severe case of all simulations increased by approximately 8%, but the majority of the results decreased substantially, as summarized in Table 2-6. For all cases where the maximum loads increased it has been shown that the design maintains an acceptable margin of safety, as documented in Reference 3. Because the results using the seismic input based on Reference 33 are

either less severe than those based on Reference 30 or have been evaluated and shown to remain acceptable, the current seismic input as discussed in the preceding paragraphs (the input based on Reference 30) will remain the design and licensing basis for the AP1000 New Fuel Storage Rack.

2.2.2 Modeling Methodology

2.2.2.1 General Considerations

Once a set of input excitations is obtained, a dynamic representation is developed. Reliable assessment of the stress field and kinematic behavior of a rack module calls for a conservative dynamic model incorporating all key attributes of the actual structure. This means that the dynamic model must have the ability to execute concurrent sliding, rocking, bending, twisting, and other motion forms compatible with the free-standing installation of the module. Additionally, the model must possess the capability to effect momentum transfers that occur due to rattling of fuel assemblies inside storage cells and the capability to simulate lift-off and subsequent impact of support pedestals with the rack bearing pad or pit floor. Since the AP1000 New Fuel Storage Rack is not placed in water, there is no contribution from water mass in the interstitial spaces around the rack module and within the storage cells. The Coulomb friction coefficients at the pedestal to bearing pad and pit floor interfaces may lie in a rather wide range, depending on the design of those interfaces, and the model must be able to reflect their effect. Finally, the analysis must consider that the AP1000 New Fuel Storage Rack may be fully or partially loaded with fuel assemblies or may be entirely empty. In short, there are a large number of parameters with potential influence on the rack motion. A comprehensive structural evaluation must be able to incorporate all of these effects, in a finite number of analyses, without sacrificing conservatism.

The three-dimensional (3-D) dynamic model of a single fuel rack was introduced by Holtec International in 1980 and has been used in many re-rack projects since that time. These re-rack projects include Turkey Point, St. Lucie, and Diablo Canyon. The details of this classical methodology are presented in Reference 9. The 3-D model of a typical rack handles the array of variables as follows:

- <u>Interface Coefficient of Friction</u>

  Coefficient of friction (COF) values are assigned at each interface, which reflect the realities of stainless steel-to-stainless steel (pedestal to bearing pad) and stainless steel-to-concrete (bearing pad to pit floor) contact. The mean value of coefficient of friction is 0.5, and the limiting values are based on experimental data, which are bounded by the values 0.24 and 0.8 (Reference 20).

  Although the seismic analysis of the AP1000 New Fuel Storage Rack considers three different coefficients of friction, 0.24 (Run 5), 0.5 (Run 2), and 0.8 (Run 3) respectively; between the support pedestals, bearing pad, and the pit floor, the reality is that the coefficient of friction will be greater than 0.244 since the new fuel pit, unlike the spent fuel pool, is not flooded with water. Per Reference 29, the static coefficient of friction for steel on steel (dry) is between 0.74 and 0.78, and per Reference 34 the static coefficient of friction when enveloped by two standard deviations ranges between 0.244 and 0.724. For completeness, the significant results from all evaluations for the simulations using the COF values from 0.24 to 0.8 are summarized in Table 2-6.

- Impact Phenomena

  Compression-only spring elements, with gap capability, are used to provide for opening and closing of interfaces, such as the pedestal-to-bearing pad interface, the fuel assembly-to-cell wall interface, and the rack-to-pit wall potential contact locations.

- Fuel Loading Scenarios

  The dynamic analyses performed for the AP1000 New Fuel Storage Rack assume that all fuel assemblies within the rack rattle in unison throughout the seismic event, which exaggerates the contribution of impact against the cell wall. In this analysis the fuel assemblies are considered to move perfectly in-phase (that is, the fuel assembly rattling attenuation factor equals one for all simulations).

- Fluid Coupling

  Since the AP1000 New Fuel Storage Rack is installed in a dry enclosure, no fluid coupling effects are modeled in the dynamic simulations.

2.2.2.2 Specific Modeling Details for a Single Rack

The rack analysis is performed using a 3-D multi-degree of freedom model. For the dynamic analysis, the rack, plus contained rattling fuel, is modeled as a 22 Degree of Freedom (DOF) system. The rack cellular structure elasticity is modeled by a 3-D beam having 12 DOF (three translation and three rotational DOF at each end so that two-plane bending, tension/compression, and twist of the rack are accommodated). An additional two horizontal DOFs are ascribed to each of five rattling fuel masses, which are located at heights 0H, 0.25H, 0.5H, 0.75H, and H, where H is the height of a storage cell above the baseplate. While the horizontal motion of the rattling fuel mass is associated with five separate masses, the totality of the fuel mass is associated with the vertical motion and it is assumed that there is no fuel rattling in the vertical direction. In other words, the vertical displacement of the fuel is coupled with the vertical displacement of the rack (that is, degree of freedom "P3" in Figure 2-2) by lumping the entire stored fuel mass (in the vertical direction only) with the vertical rack mass at the baseplate level.

The beam model for the rack is assumed supported, at the base level, on four pedestals modeled with non-linear elements; these elements are properly located with respect to the centerline of the rack beam, and allow for arbitrary rocking and sliding motions. The horizontal rattling fuel masses transfer load to the new fuel rack through compression-only gap spring elements, oriented to allow impacts of each of the five rattling fuel masses with the rack cell in either or both horizontal directions at any instant in time. Figure 2-2 illustrates the typical dynamic rack model with the degrees of freedom shown for both the AP1000 New Fuel Storage Rack and for the rattling fuel mass. Table 2-16 defines the nodal DOFs for the dynamic model of a single rack as depicted in Figure 2-2. In order to simulate this behavior, the stored fuel mass is distributed among the five lumped mass nodes, for the rack, as follows:

% of total stored fuel mass

- Top of rack (Node 2) 12.5%
- 3/4 height (Node 3) 25%
- 1/2 height (Node 4) 25%
- 1/4 height (Node 5) 25%
- Bottom of rack (Node 1) 12.5%

The stiffness of pedestal springs that simulate rack pedestal to the floor compression-only contact is modeled using contact and friction elements at the locations of the pedestals between pedestal and floor. Four contact springs (one at each corner location) and eight friction elements (two per pedestal) are included in each 22 DOF rack model.

Also shown in Figure 2-2 is a detail of the model of a typical support with a vertical compression-only gap element and two orthogonal elements modeling frictional behavior. These friction elements resist lateral loads, at each instant in time, up to a limiting value set by the current value of the normal force times the coefficient of friction. Figures 2-3 through 2-5 show schematic diagrams of the various (linear and non-linear) elements that are used in the dynamic model of the AP1000 New Fuel Storage Rack. Figure 2-3 shows the location of the compression-only gap elements that are used to simulate the rack-to-wall contact at every instant in time. Figure 2-4 shows the four compression-only gap elements at each rattling mass location, which serve to simulate rack-to-fuel assembly impact in any orientation at each instant in time. Figure 2-5 shows a two-dimensional elevation schematic depicting the five fuel masses and their associated gap/impact elements, the typical pedestal friction and gap impact elements. This figure combines many of the features shown in Figures 2-3 and 2-4, and it provides an overall illustration of the dynamic model used for the AP1000 New Fuel Storage Rack.

Finally, Figure 2-6 provides a schematic diagram of the coordinates and the beam springs used to simulate the elastic bending behavior and shear deformation of the rack cellular structure in two-plane bending. Not shown are the linear springs modeling the extension, compression, and twisting behavior of the cellular structure.

Mass Matrix

Since there is no water in the AP1000 New Fuel Storage Rack enclosure, the mass matrix involves only the structural masses associated with the dynamic model.

Stiffness Matrix

The spring stiffness associated with the elastic elements that model the behavior of the assemblage of cells within a rack are based on the representation developed in Reference 10. Tension-compression behavior and twisting behavior are each modeled by a single spring with linear or angular extension involving the appropriate coordinates at each end of the rack beam model. For simulation of the beam bending stiffness, a model is used consistent with the techniques of the reference based on a bending spring and a shear spring for each plane of bending, which connects the degrees of freedom associated with beam bending at each end of the rack. Impact and friction behavior is included using the piecewise linear formulations similarly taken from the reference.

2.2.3 Simulation and Solution Methodology

Recognizing that the analytical work effort must deal with stress and displacement criteria, the sequence of model development and analysis steps that are undertaken for each simulation are summarized in the following:

a. Prepare a 3-D dynamic model of the AP1000 New Fuel Storage Rack module.

b. Perform dynamic analyses and archive results for post-processing appropriate displacement and load outputs from the dynamic model.

c. Perform stress analysis of high stress areas for rack dynamic runs. Demonstrate compliance with American Society for Mechanical Engineers (ASME) Code Section III, subsection NF (Reference 11) limits on stress and displacement. The high stress areas are associated with the pedestal-to-baseplate connection. In addition, some local evaluations are performed for the bounding case to ensure that the fuel remains protected under all impact loads.

For the transient analyses performed in part b described above, a step-by-step solution in time, which uses a central difference algorithm, is used to obtain a solution. The solver computer algorithm, implemented in the Holtec Proprietary Code MR216 (a.k.a. DYNARACK), is given in Reference 10, and the documentation of MR216 is presented in Reference 12.

Using the 22-DOF rack structural model in each DYNARACK simulation, equations of motion corresponding to each degree-of-freedom are obtained using Lagrange's formulation of the dynamic equations of motion (Reference 10). The system kinetic energy includes contributions from the structural masses defined by the 22-DOF model.

Results are archived at appropriate time intervals for permanent record and for subsequent post-processing for structural integrity evaluations as follows:

- All generalized nodal displacement coordinate values in order to later determine the motion of the rack
- All load values for linear springs representing beam elasticity
- All load values for compression-only gap springs representing pedestals, rack-to-fuel impact, and rack-to-pit wall impacts
- All load values for friction springs at the pedestal/bearing pad interface

Simulation Descriptions

The AP1000 New Fuel Storage Rack is subject to the "New Fuel" Floor Response Spectra provided in Reference 18. Four runs are performed to bound possible coefficient of friction (COF) values and to determine impact on rack fuel loading and are summarized in Table 2-2. Note: A run was performed with

the rack fully loaded and using a coefficient of friction of 0.24. This run, Run number 5, supersedes Run number 1 as the reference design basis.

Run numbers 2, 3, and 5 in Table 2-2 are the base set of runs, which bound the possible coefficients of friction at the interface between the rack support pedestals, bearing pads, and the pit floor. The base runs evaluate the rack in the fully loaded condition and consider the coefficient of friction as 0.5, 0.8, and 0.24 for Run numbers 2, 3, and 5, respectively. (Note: Run number 4 is identical to Run number 3 except it considers the most limiting partial fuel loading condition, as shown in Figure 2-11.)

2.2.4 Conservatisms Inherent in Methodology

The following items are built-in conservatisms:

- All fuel rattling mass at each level is assumed to move as a unit thus maximizing impact force and rack response.

2.3 KINEMATIC AND STRESS ACCEPTANCE CRITERIA

2.3.1 Introduction

The AP1000 New Fuel Storage Rack is designed as seismic Category I. The U.S. NRC Standard Review Plan 3.8.4 (Reference 6) states that the ASME Code Section III, subsection NF (Reference 11), as applicable for Class 3 Components, is an appropriate vehicle for design. The stress analysis of the new fuel rack also satisfies all of the applicable provisions in NRC Regulatory Guide 1.124, Revision 1 (Reference 26) for components designed by the linear elastic analysis method. In addition, an evaluation has been performed to confirm that the stress analysis of the new fuel rack also satisfies the applicable provisions of NRC Regulatory Guide 1.124, Revision 2 (Reference 27). In the following sections, the ASME limits are set down.

2.3.2 Kinematic Criteria

The AP1000 New Fuel Storage Rack should not exhibit rotations to cause the rack to overturn (in the east-west direction) (that is, ensure that the rack does not slide off the bearing pads, or exhibit a rotation sufficient to bring the center of mass over the corner pedestal).

2.3.3 Stress Limit Criteria

For thoroughness, the Standard Review Plan (Reference 6) load combinations were used. Stress limits must not be exceeded under the required load combinations. The loading combinations shown in Table 2-3 are applicable for freestanding racks that are steel structures. (Note that there is no operating basis earthquake [OBE] event defined for the AP1000; therefore, loading conditions associated with an OBE event are not considered.)

2.3.4 Stress Limits for Various Conditions Per ASME Code

Stress limits for Normal Conditions are derived from the ASME Code, Section III, Subsection NF. Parameters and terminology are in accordance with the ASME Code. The AP1000 New Fuel Storage Rack is freestanding; thus, there is minimal or no restraint against free thermal expansion at the base of the rack. Moreover, thermal stresses are secondary, which strictly speaking, have no stipulated stress limits in Class 3 structures or components when acting in concert with seismic loadings. Thermal loads applied to the rack are, therefore, not included in the stress combinations involving seismic loadings.

Material properties for analysis and stress evaluation are provided in Table 2-5.

2.3.4.1 Normal Conditions (Level A)

Normal conditions are as follows:

- Tension

  Allowable stress in tension on a net section is:

  $$F_t = 0.6\ S_y$$

  where S_y is the material yield strength at temperature. (F_t is equivalent to primary membrane stress.)

- Shear

  Allowable stress in shear on a net section is:

  $$F_v = 0.4\ S_y$$

- Compression

  Allowable stress in compression (F_a) on a net section of Austenitic material is:

  $$F_a = S_y(.47 - kl/444r)$$

  where $kl/r < 120$ for all sections, and

  l = unsupported length of component.

  k = length coefficient which gives influence of boundary conditions, for example:
  k = 1 (simple support both ends)
  k = 2 (cantilever beam)
  k = 0.5 (clamped at both ends)

  Note: Evaluations conservatively use k = 2 for all conditions.

r = radius of gyration of component = c/2.45 for a thin wall box section of mean side width c.

- Bending

Allowable bending stress (F_b) at the outermost fiber of a net section due to flexure about one plane of symmetry is:

$$F_b = 0.60\ S_y$$

- Combined Bending and Compression

Combined bending and compression on a net section satisfies:

$$f_a/F_a + C_{mx}f_{bx}/D_xF_{bx} + C_{my}f_{by}/D_yF_{by} < 1.0$$

where:

f_a	=	Direct compressive stress in the section
f_{bx}	=	Maximum bending stress for bending about x-axis
f_{by}	=	Maximum bending stress for bending about y-axis
C_{mx}	=	0.85
C_{my}	=	0.85
D_x	=	$1 - (f_a/F'_{ex})$
D_y	=	$1 - (f_a/F'_{ey})$
$F'_{ex,ey}$	=	$(\pi^2 E)/(2.15\ (kl/r)_{x,y}^2)$

and subscripts x and y reflect the particular bending plane.

- Combined Flexure and Axial Loads

Combined flexure and tension/compression on a net section satisfies:

$$(f_a/0.6\ S_y) + (f_{bx}/F_{bx}) + (f_{by}/F_{by}) < 1.0$$

- Welds

Allowable maximum shear stress (F_w) on the net section of a weld is:

$$F_w = 0.3\ S_u$$

where S_u is the material ultimate strength at temperature. For the area in contact with the base metal, the shear stress on the gross section is limited to $0.4S_y$.

2.3.4.2 Upset Conditions (Level B)

Although the ASME Code allows an increase in allowables above those appropriate for normal conditions, any evaluations performed herein conservatively use the normal condition allowables.

2.3.4.3 Faulted (Abnormal) Conditions (Level D)

Section F-1334 (ASME Section III, Appendix F [Reference 14]), states that limits for the Level D condition are the smaller of 2 or $1.167S_u/S_y$ times the corresponding limits for the Level A condition if $S_u > 1.2S_y$, or 1.4 if $S_u \leq 1.2S_y$ except for requirements specifically listed below. S_u and S_y are the properties of 304 stainless steel at the specified rack design temperature. Examination of material properties for 304 stainless steel demonstrates that 1.2 times the yield strength is less than the ultimate strength. Since 1.167 * (75,000/30,000) = 2.92, the multiplier of 2.0 controls.

Exceptions to the above general multiplier are the following:

- Stresses in shear in the base metal shall not exceed the lesser of $0.72S_y$ or $0.42S_u$. In the case of the austenitic stainless material used here, $0.72S_y$ governs.

- Axial compression loads shall be limited to 2/3 of the calculated buckling load.

- Combined Axial Compression and Bending - The equations for Level A conditions shall apply except that:

  F_a = 0.667 x Buckling Load/Gross Section Area,

  and $F_{ex,ey}$ may be increased by the factor 1.65.

- For welds, the Level D allowable maximum weld stress is not specified in Appendix F of the ASME Code. An appropriate limit for weld throat is conservatively set here as:

  $F_w = (0.3\ S_u) \times \text{factor}$

  where: factor = (Level D shear stress limit)/(Level A shear stress limit) = $0.72 \times S_y / 0.4 \times S_y = 1.8$

  therefore; $F_w = (0.3\ S_u) \times (1.8) = 0.54\ S_u$

2.3.5 Dimensionless Stress Factors

In accordance with the methodology of the ASME Code, Section NF, where both individual and combined stresses must remain below certain values, the stress results are presented in dimensionless form. Dimensionless stress factors are defined as the ratio of the actual developed stress to the specified limiting value. The limiting value of each stress factor is 1.0 based on an evaluation that uses the allowable strength appropriate to Level A or Level D loading as discussed above.

R_1 = Ratio of direct tensile or compressive stress on a net section to its allowable value (note pedestals only resist compression)

R_2 = Ratio of gross shear on a net section in the x-direction to its allowable value

R_3 = Ratio of maximum bending stress due to bending about the x-axis to its allowable value for the section

R_4 = Ratio of maximum bending stress due to bending about the y-axis to its allowable value for the section

R_5 = Combined flexure and compression factor (as defined in subsection 2.3.4.1)

R_6 = Combined flexure and tension (or compression) factor (as defined in subsection 2.3.4.1)

R_7 = Ratio of gross shear on a net section in the y-direction to its allowable value

At any location where stress factors are reported, the actual stress at that location may be recovered by multiplying the reported stress factor R by the allowable stress for that quantity. For example, if a reported Level A combined tension and two plane bending stress factor is $R_6 = 0.85$, and the allowable strength value is $0.6S_y$, then the actual combined stress at that location is Stress = R_6 x $(0.6S_y) = 0.51Sy$.

Note that a conservative yield strength value of 25,000 psi for the rack material was used to evaluate the dimensionless stress factors in the DYNARACK model; therefore, when calculating the actual combined stress using the dimensionless stress factors it is appropriate to use Sy = 25,000 psi.

2.4 ASSUMPTIONS

The following assumptions are used in the analysis:

- Fluid damping is neglected as there is no water in the AP1000 New Fuel Storage Rack.
- The total effect of *n* individual fuel assemblies rattling inside the storage cells in a horizontal plane is modeled as one lumped mass at each of five levels in the fuel rack. Thus, the effect of chaotic fuel mass movement is conservatively ignored.
- For the AP1000 New Fuel Storage Rack, there is no temperature differential and no hot cell.

2.5 INPUT DATA

2.5.1 Rack Data

Table 2-4 contains information regarding the AP1000 New Fuel Storage Rack Module and Fuel Data that are used in the analysis. Information is taken from the new fuel rack drawings (Reference 8) (unless noted otherwise).

2.5.2 Structural Damping

Associated with every stiffness element is a damping element with a coefficient consistent with 4% of critical linear viscous damping. This is consistent with the "New Fuel" design basis Floor Response Spectra set for the AP1000 New Fuel Storage Rack provided in Reference 18 and the Westinghouse AP1000 Seismic Design Criteria provided in Reference 21.

2.5.3 Material Data

The necessary material data is shown in Table 2-5. This information is taken from ASME Code Section II, Part D (Reference 13). The values listed correspond to a temperature of 100°F, which is appropriate since new fuel does not release heat.

2.6 COMPUTER CODES

Computer codes used in this analysis are presented in Table 2-15.

2.7 ANALYSES

2.7.1 Acceptance Criteria

The dimensionless stress factors, discussed in subsection 2.3.5, must be less than 1.0. In addition:

- The compressive loads on the cell walls shall be shown to remain below two thirds of the critical buckling load (i.e., a minimum safety factor of 1.5 against buckling is maintained).
- Welds and base metal stresses must remain below the allowable stress limits corresponding to the material and load conditions, as discussed in greater detail in following sections.

2.7.2 Dynamic Simulations

As discussed earlier, four simulations are performed (Run number 1 has been superseded by Run number 5). The simulations consider the "New Fuel" Floor Response Spectra.

2.8 RESULTS OF ANALYSES

The following subsections contain the results obtained from the post-processor DYNAPOST (Reference 15) for the AP1000 New Fuel Storage Rack under the "New Fuel Floor" Response Spectra.

2.8.1 Time History Simulation Results

Table 2-6 presents the results for major parameters of interest for the new rack for each simulation. Run numbers are as listed in Table 2-2.

2.8.1.1 Rack Displacements

The post-processor results summarized in Table 2-6 provide the maximum absolute displacements at the top and bottom corners in the east-west and north-south directions, relative to the pit floor.

2.8.1.2 Pedestal Vertical Forces

Run numbers 2 and 3 provides the maximum vertical load on any pedestal. The results from these runs may be used to assess the structural integrity of the pit floor under the seismic event (included in Table 2-6).

2.8.1.3 Pedestal Friction Forces

Run number 3 provides the maximum shear loads; the value is used as an input loading to evaluate the baseplate-to-pedestal weld stress (see Table 2-12).

2.8.1.4 Impact Loads

The impact loads, such as fuel-to-cell wall and rack-to-wall impacts, are discussed below. Due to the design and construction of the AP1000 New Fuel Storage Rack (fuel assemblies are separated by two cell walls and an air gap), fuel-to-fuel impacts are unable to occur.

Fuel-to-Cell Wall Impact Loads

The maximum fuel-to-cell wall impact load, at any elevation in the rack, occurs during Run number 4.

The most significant load on the fuel assembly arises from rattling during the seismic event. For the five-lumped mass model (with 25% at the 1/4 points and 12.5% at the ends), the maximum g-load that the rack imparts onto the fuel assembly can be computed as:

$$a = \frac{4F}{w} = 4.63g$$

where:

a = maximum lateral acceleration in g's (a=63)
F = maximum fuel-to-cell wall impact force (=1,992 lbf)
w = weight of one fuel assembly (conservatively taken to be 1,720 lbs)

The maximum lateral acceleration is an order of magnitude less than the impact decelerations that fuel assemblies are typically qualified for in cask transport applications. Thus, the stored fuel assemblies inside the AP1000 New Fuel Storage Rack are capable of withstanding the maximum fuel-to-cell wall impact load.

Rack-to-Wall Impacts

The solver summary result files from MR216 (Reference 12) in all of the simulations were manually scanned to determine the maximum impact on each side of the rack. The total rack-to-wall impact at any one time instant is derived from the output data and calculated for all four simulations. The maximum impact loads from the pit walls onto the rack are summarized in Table 2-6.

None of the simulations result in rack-to-wall impacts with the gaps set to their nominal sizes (6.875 inches at the top and 5.875 inches at the baseplate), or when the gaps were reduced to their lower limits (6 inches at the top and 5 inches at the baseplate). Since the seismic analysis shows no rack-to-wall impacts, the new fuel pit walls are not required to be analyzed for any rack-to-wall impacts.

2.8.2 Rack Structural Evaluation

2.8.2.1 Rack Stress Factors

With time history results available for pedestal normal and lateral interface forces, the limiting bending moment and shear force at the baseplate-to-pedestal interface may be computed as a function of time. In particular, maximum values for the previously defined stress factors can be determined for every pedestal in the AP1000 New Fuel Storage Rack. The maximum stress factor from each simulation is reported in Table 2-6. Using this information, the structural integrity of the pedestal can be assessed. The net section maximum (in time) bending moments and shear forces can also be determined at the bottom of the cellular structure. Based on these, the maximum stress in the limiting rack cell (box) can be evaluated.

The summary of the maximum stress factors for the AP1000 New Fuel Storage Rack, for each of the simulations detailed in Table 2-2, is provided in Table 2-9. The table reports the pedestal stress factors as well as the stress factors for the cellular cross-section just above the baseplate. The cell area just above the baseplate is the most heavily loaded net section in the rack structure, so satisfaction of the stress factor criteria at this location ensures that the overall structural criteria set forth in subsection 2.3.3 are met.

An adjustment factor accounting for the ASME Code slenderness ratio has been calculated. The adjusted factors are identified with * in Table 2-9.

All stress factors, as defined in Section 2.3.5, are less than the required limit of 1.0 for the new fuel rack for the governing faulted condition examined. Therefore, the AP1000 New Fuel Storage Rack is able to maintain its structural integrity under the worst loading conditions.

2.8.2.2 Weld Stresses

Weld locations in the AP1000 New Fuel Storage Rack that are subjected to significant seismic loading are at the bottom of the rack at the baseplate-to-cell connection, at the top of the pedestal support at the baseplate connection, and at the cell-to-cell connections. Bounding values of resultant loads are used to qualify the connections.

a. <u>Baseplate-to-Rack Cell Welds</u>

Reference 11 (ASME Code Section III, subsection NF) permits, for Level A or B conditions, an allowable weld stress $\tau = .3\ S_u$. Conservatively assuming that the weld strength is the same as the lower base metal ultimate strength, the allowable stress is given by $\tau = .3 * (75{,}000) = 22{,}500$ psi. As stated in subsection 2.3.4.3, the allowable for welds for Level D is $0.54\ S_u$, giving an allowable of 40,500 psi.

Weld stresses are determined through the use of a simple conversion (ratio) factor (based on area ratios) applied to the corresponding stress factor in the adjacent rack material. This conversion factor is developed from the differences in base material thickness and length versus weld throat dimension and length:

$$\frac{0.075*(8.8+0.075)}{0.0625*0.7071*7.0} = 2.1516$$

where:

0.075	is the cell wall thickness
8.8+0.075	is the mean box dimension
0.0625*0.7071	is the box-baseplate fillet weld throat size
7.0	is the length of the weld

The highest predicted cell to baseplate weld stress is calculated based on the highest R6 value for the rack cell region tension stress factor and R2 and R7 values for the rack cell region shear stress factors (refer to subsection 2.3.5 for definition of these factors). These cell wall stress factors are converted into weld stress values as follows:

$$\{[R6 * (1.2)]^2 + [R2 * (0.72)]^2 + [R7 * (0.72)]^2\}^{1/2} * S_y * \text{Ratio} =$$

$$\{[0.308* (1.2)]^2 + [0.035 * (0.72)]^2 + [0.032 * (0.72)]^2\}^{1/2} * (25{,}000) * 2.1516 = 19{,}965 \text{ psi}$$

The above calculation is conservative because the maximum stress factors used do not all occur at the same time instant.

Table 2-10 shows that the maximum baseplate-to-rack cell weld stresses and corresponding cell base metal shear stresses are acceptable and have safety factors greater than 1.

b. Baseplate-to-Pedestal Welds

The rack weld between baseplate and support pedestal is checked using conservatively imposed loads in a separate finite element model. Table 2-12 summarizes the result, showing a safety factor greater than 1.

c. Cell-to-Cell Welds

Cell-to-cell connections are by a series of connecting welds along the cell height. Stresses in storage cell-to-cell welds develop due to fuel assembly impacts with the cell wall. These weld

stresses are conservatively calculated by assuming that fuel assemblies in adjacent cells are moving out of phase with one another so that impact loads in two adjacent cells are in opposite directions; this tends to separate the two cells from each other at the weld. The cell-to-cell welds calculation used the maximum stress factor from all of the runs. Both the weld stress and the cell base metal shear stress results are reported in Table 2-13, and show safety factors greater than 1.

2.8.2.3 Pedestal Thread Shear Stress

Tables 2-14 provides the limiting pedestal thread shear stress under faulted conditions. The maximum average shear stress in the engagement region is calculated based on the vertical load, with the maximum occurring in Run numbers 2 and 3. This computed stress is applicable to both the male and female pedestal threads.

The allowable shear stress for Level D conditions is the lesser of: 0.72 S_y = 21,600 psi or 0.42 S_u = 31,500 psi. Therefore, the former criterion controls the allowable pedestal thread base metal shear stress. The result is detailed in Table 2-14, which shows a safety factor greater than 1.

2.8.3 Dead Load Evaluation

The dead load condition is not a governing condition for the AP1000 New Fuel Storage Rack since the general level of loading is far less than the safe shutdown earthquake (SSE) load condition. To illustrate this, it is shown below that the maximum pedestal load is relatively low and that further stress evaluations are unnecessary.

Level A Maximum Pedestal Load	Lbf
Dry Weight of 9x8 Rack	24,750
Dry Weight of 72 Intact Fuel Assemblies	140,688
Total Dry Weight	165,438
Load per Pedestal	41,360

This load will induce low stress levels in the neighborhood of the pedestal, compared with the load levels that exist under the SSE load condition (that is, on the order of 263,000 per rack pedestal). There are no primary shear loads on the pedestal and since the Level A loads are well less than 20% of the Level D loads, while the Level A limits are greater than 50% of the Level D limits, the SSE load condition bounds the dead load condition and no further evaluation is necessary for dead load only.

2.8.4 Local Stress Considerations

This subsection presents evaluations for the possibility of cell wall buckling. No secondary stresses due to temperature differences are produced since for the AP1000 New Fuel Storage Rack there is no temperature differential or hot cell.

An ANSYS analysis was performed to evaluate the buckling capacity of the AP1000 New Fuel Storage Rack cells at the base of the rack. The cell wall acts alone in compression for a length of about 6.23

inches up to the point where the neutron absorber sheathing is attached. Above this level the sheathing provides additional strength against buckling; therefore, the analysis focuses on the lower 6.23 inches of the cell wall.

The maximum compressive stress in the outermost cell under seismic loading is:

$\sigma = (1.2)\ (25{,}000)\ (R6, \text{ which is } 0.308) = 9{,}240$ psi

For conservatism, a compressive force equivalent to 9,500 psi is applied to the ANSYS finite element model. This force is then increased by a factor of 1.5 to ensure that the acceptance criteria in Section 2.7.1 is met.

The ANSYS analysis demonstrated that the AP1000 New Fuel Storage Rack cells remain in a stable configuration under 1.5 times the conservative compressive stress discussed above that results from the maximum seismic load without any gross yielding of the storage cell wall, which satisfies the ASME Code requirements for Level D conditions.

2.8.5 New Fuel Assembly Drop Accidents

During normal fuel handling operations, a single failure proof hoist designed to meet the requirements of NUREG-0554 (Reference 39) is the only hoist capable of moving new fuel above the operating floor. Per the design criteria contained in this NUREG, drops from a single failure proof hoist are deemed unlikely and do not require further analysis. Because a new fuel assembly drop into the new fuel pit and onto the new fuel rack is unlikely, it is unnecessary to evaluate drop scenarios for the new fuel storage rack.

2.8.6 Stuck Fuel Assembly Evaluation

A nearly empty rack with one corner cell occupied is subject to an upward load of 4,000 lbf, which is assumed to be caused by the fuel sticking while being removed. The ramification of the loading is two-fold:

1. The upward load creates a force and a moment at the base of the rack;

2. The loading induces a local tension in the cell wall and shear stresses in the adjacent welds.

Strength of materials calculations have been performed to determine the maximum stress in the rack cell structure due to a postulated stuck fuel assembly. The results are summarized in Table 2-17, and show safety factors greater than 1.

2.9 CONCLUSIONS

From the results of the single-rack analyses, the following conclusions are made regarding the design and layout of the AP1000 New Fuel Storage Rack.

- All rack cell wall and pedestal stress factors are significantly below the allowable stress factor limit of 1.0.

- The worst-case compressive loads on the rack cellular structure during a seismic event are less than two thirds the critical buckling load.
- All weld stresses are below the allowable limits.
- There are no rack-to-wall impacts under realistic pit conditions.
- A stuck fuel assembly results in stress conditions within the allowable limits.
- Fuel assembly drop accidents deemed unlikely due to the hoist associated in moving new fuel utilizing single failure proof design criteria.

It is therefore considered demonstrated that the design of the AP1000 New Fuel Storage Rack meets the requirements for structural integrity for the postulated Level A and Level D conditions defined.

Table 2-1 AP1000 New Fuel Storage Rack Storage Cell Description

(All dimensions are nominal and in inches; tolerances are not shown because they are Westinghouse Proprietary Information.)

Parameter	Nominal Dimension (in) or Material
Cell Center-to-Center Pitch	10.9
Cell Inner Dimension (Width)	8.8
Inter-Cell Flux Trap Gap	1.644
Cell Length	199.5
Cell Wall Thickness	0.075
Neutron Absorber Dimensions (L x W x t)	172 x 7.5 x 0.106
Distance from Top of Rack Baseplate to Bottom of Neutron Absorber	6.23
Neutron Absorber Sheathing Thickness Internal Walls Periphery Walls	 0.035 0.075

Table 2-2 Simulation Listing

Run Number	Coefficient of Friction	Loading Configuration
1(2)	See Note 2	See Note 2
2	0.5	Fully Loaded
3	0.8	Fully Loaded
4	0.8	Partially Loaded(1)
5(2)	0.24	Fully Loaded

Note:

1. See Figure 2-11 for the partially loaded layout configuration.
2. Run number 5 information and inputs are the reference design basis and supersedes Run number 1 information.

Table 2-3 Loading Combinations for AP1000 New Fuel Storage Rack

Loading Combination	Service Level
$D + L$ $D + L + T_o$	Level A (Note 1, Note 2)
$D + L + T_a$ $D + L + T_o + P_f$	Level B (Note 1,Note 2)
$D + L + T_a + E'$	Level D (Note 2)
$D + L + F_d$	The functional capability of the fuel rack should be demonstrated. (Note 3)

Notes:

1. There is no operating basis earthquake (OBE) for the AP1000 plant.
2. The AP1000 New Fuel Storage Rack is freestanding; thus, there is minimal or no restraint against free thermal expansion at the base of the rack. As a result, thermal loads applied to the rack (T_o and T_a) produce only local (secondary) stresses.
3. This load combination is not required for an AP1000 new fuel rack since a load drop is an unlikely accident with a single failure proof hoist.

Abbreviations are those used in Reference 6:

D = Dead weight induced loads (including fuel assembly weight)

L = Live load (not applicable to fuel racks since there are no moving objects in the rack load path)

F_d = Force caused by the accidental drop of the heaviest load from the maximum possible height

P_f = Upward force on the rack caused by postulated stuck fuel assembly

E' = Safe Shutdown Earthquake (SSE)

T_o = Differential temperature induced loads based on the most critical transient or steady state condition under normal operation or shutdown conditions

T_a = Differential temperature induced loads based on the postulated abnormal design conditions

Table 2-4 AP1000 New Fuel Storage Rack Module and Fuel Data

Geometric Parameter		Nominal Dimension (in) Unless Noted
Rack Module Data		
Pedestal Type (fixed or adjustable)		Adjustable
Pedestal Height (female + male)		2.75
Female Pedestal Dimensions (L x W x t)		11.0 x 11.0 x 2.25
Male Pedestal Diameter		4.5
Bearing Pad Dimensions (L x W x t)		18.0 x 18.0 x 1.5
Total Module Height		204.5
Baseplate Thickness		0.75
Baseplate Lateral Extension (beyond cell envelope)		1.0
Fuel Data		
Minimum Dry Fuel Weight (excluding Control Components) (lb)		1,720 (Reference 37)
Maximum Dry Fuel Weight (including Control Components) (lb)		1,954 (References 37 and 19)
Minimum Nominal Fuel Assembly Size		8.404[1] (References 37 and 38)
Maximum Nominal Fuel Assembly Size		8.426 (Reference 38)
Rack Details		
Rack	**Array Size**	**Weight (lb)**
New Fuel Rack	9 x 8	24,750

Note:

1. The minimum nominal fuel assembly size excludes the IFM grids, which are located between the normal grid straps.

Table 2-5 Material Data (ASME - Section II, Part D)

Material	Young's Modulus E (psi)	Yield Strength S_y (psi)	Ultimate Strength S_u (psi)
Rack Material Data (100°F)			
SA-240, Type 304	28.1×10^6	30,000[1]	75,000
Support Material Data (100°F)			
SA-240, Type 304 (Female pedestal)	28.1×10^6	30,000[1]	75,000
SA-564, Type 630 (Hardened at 1100° F) (Male pedestal)	28.3×10^6	115,000	140,000

Note:

1. As discussed in section 2.3.5, DYNARACK conservatively uses 25,000 psi as the yield strength for the SA-240, Type 304 material; therefore, it is appropriate to use Sy = 25,000 psi when calculating the actual combined stress at a location using the dimensionless stress factors. This is done in sections 2.8.2.2 and 2.8.4.

Table 2-6 Results Summary[1]

Parameter	Run No. 1	Run No. 2	Run No. 3	Run No. 4	Run No. 5
Max. Stress Factor	See Note 2	0.302 (0.310)	0.308 (0.311)	0.177 (0.180)	0.280 (0.293)
Max. Vertical Load (lbf)	See Note 2	263,000 (283,000)	263,000 (284,000)	162,000 (164,000)	252,000 (256,000)
Max. Shear Load (X or Y) (lbf)	See Note 2	88,400 (92,000)	147,000 (112,000)	95,400 (96,200)	51,900 (59,600)
Max. Fuel-to-Cell Wall Impact (lbf)	See Note 2	1,667 (1,171)	1,722 (1,297)	1,992 (1,383)	1,285 (1,338)
Max. Baseplate Displacement[3] (N-S) (in)	See Note 2	0.38 (0.22)	0.08 (0.12)	0.50 (0.45)	4.92[2] (2.55)
Max. Top Displacement[4] (N-S) (in)	See Note 2	2.08 (2.16)	2.07 (2.32)	3.21 (1.83)	5.54[2] (3.79)
Max. Baseplate Displacement[3] (E-W) (in)	See Note 2	0.21 (0.19)	0.10 (0.06)	0.25 (0.33)	2.20[2] (2.37)
Max. Top Displacement[4] (E-W) (in)	See Note 2	2.12 (2.82)	1.79 (2.25)	1.77 (1.78)	2.86[2] (3.57)
Max. Rack-to-Wall Impact[3][4] (lbf)	See Note 2	0 (0)	0 (0)	0 (0)	0[2] (0)

Notes:

1. For information, the results from the simulations using the new seismic input that was made available in May 2010 via Reference 33 are included in this table in parenthesis after the results from the design basis runs that use the seismic input that was transmitted to Holtec International via Reference 18. A comparison of the overall maximum loads that resulted from the most severe case of all simulations using each set of seismic input is as follows:

Seismic Input	Max. Stress Factor	Max. Pedestal Stress Factor	Max. Vertical Load	Max. Shear Load	Max. Fuel-to-Cell Wall Impact	Max. Baseplate Displacement	Max. Top of Rack Displacement	Max. Rack-to-Wall Impact
Design Basis[2] (Ref. 18 & 30)	0.308	0.159	263,000	147,000	1,992	4.92	5.54	0
Updated Data (Ref. 33 & 35)	0.311	0.137	284,000	112,000	1,338	2.55	3.79	0
% Difference	+ 1.0	-14	+ 8	-24	-33	-48	-32	0

2. Run number 5 information and inputs are the reference design basis and supersedes Run number 1 information.
3. The evaluations are performed using the nominal rack and pit dimensions; therefore, the rack impacts the wall at the rack baseplate if the displacement of the baseplate is 5.875" or greater.
4. The evaluations are performed using the nominal rack and pit dimensions; therefore, the rack impacts the wall at the top of the rack if the displacement of the top of the rack is 6.875" or greater.

Table 2-7 Deleted (combined with Table 2-6)

Table 2-8 Deleted (combined with Table 2-6)

Table 2-9 Maximum Pedestal and Cell Wall Stress Factors

Run No.	Pedestal Stress Factor	Cell Wall Stress Factor
1	Superseded by Run number 5	Superseded by Run number 5
2	0.136	0.302 $\left(0.302 \times \left(\frac{1}{0.773}\right)\right) = 0.390$ *
3	0.159	0.308 $\left(0.308 \times \left(\frac{1}{0.773}\right)\right) = 0.398$ *
4	0.098	0.177 $\left(0.177 \times \left(\frac{1}{0.773}\right)\right) = 0.229$ *
5	0.126	0.280 $\left(0.280 \times \left(\frac{1}{0.773}\right)\right) = 0.362$ *

Note:

* Adjustment factor accounting for ASME Code Slenderness Ratio

Table 2-10 Baseplate-to-Cell Weld Maximum Stresses(1)

Stress Type	Stress (psi)	Allowable Stress (psi)	Safety Factor
Weld Stress	19,965	40,500	2.03
Cell Base Metal Shear Stress	14,117	21,600	1.53

Note:

1. The shear stress in the baseplate base metal is not specifically evaluated due to the robustness of the baseplate. Values are not specific to any one run but integrated from multiple runs.

Table 2-11 Deleted (combined with Table 2-10)

Table 2-12 Baseplate-to-Pedestal Weld Maximum Stresses[1]

Run Number	Weld Stress (psi)	Allowable Stress (psi)	Safety Factor
3	13,379	40,500	3.03

Note:

1. The shear stress in the base metal for the baseplate and the pedestal is not specifically evaluated due to the robustness of these items.

Table 2-13 Cell-to-Cell Weld Maximum Stresses

Stress Type	Stress (psi)	Allowable Stress (psi)	Safety Factor
Weld Stress	17,787	40,500	2.28
Cell Base Metal Shear Stress	12,577	21,600	1.72

Table 2-14 Pedestal Thread Shear Stress

Run Number	Base Metal Shear Stress (psi)	Allowable Stress (psi)	Safety Factor
2 and 3	19,149	21,600	1.13

Table 2-15 Computer Codes Used for Analysis

Code	Version	Description
GENEQ	1.3	Generates artificial time histories from input response spectra set.
CORRE	1.3	Uses results from GENEQ and demonstrates required statistical independence of time histories.
PSD1	1.0	Uses results from GENEQ and compares regenerated Power Spectral Densities with target.
WORKING MODEL	2004	Is a Rigid Body Dynamics code used to improve baseline correction.
VMCHANGE	4.0	For a dry pool, develops a zero matrix of size = (number of racks x 22 DOF per rack).
MULTI1	1.55	Incorporates appropriate non-zero values due to structural effects that are put in appropriate locations in the output matrix from VMCHANGE to form the final mass matrix for the analysis. The appropriate non-zero right-hand sides are also developed.
MASSINV	2.1	Calculates the inverse of the mass matrix.
MSREFINE	2.1	Refines the inverse of the mass matrix.
PREDYNA1	1.5	Generates various input lines for the input file required to run the dynamic solver.
PD16	2.1	Generates rack-to-fuel compression-only impact springs, rack-to-ground impact springs, and rack elastic deflection springs for each rack being analyzed and creates the appropriate lines of input for the solver.
SPG16	3.0	Generates compression-only rack-to-rack impact springs for the specific rack configuration in the pool for the solver.
MR216	2.0	Is a solver for the dynamic analysis of the racks; uses an input file from the cumulative output from PREDYNA, PD16, and SPG16, together with the mass matrix, right-hand side matrix, and the final time histories from GENEQ.
DYNAPOST	2.0	Post-Processor for MR216; generates safety factors, maximum pedestal forces, and maximum rack movements.
ANSYS	9.0	Is a general purpose commercial FEA code.
LS-DYNA	970	General purpose commercial FEA code optimized for shock and impact analyses.

Table 2-16 Degrees of Freedom for Single Rack Dynamic Model

Location (Node)	Displacement			Rotation		
	U_x	U_y	U_z	θ_x	θ_y	θ_z
1	p_1	p_2	p_3	q_4	q_5	q_6
2	p_7	p_8	p_9	q_{10}	q_{11}	q_{12}
Node 1 is assumed to be attached to the rack at the bottom most point. Node 2 is assumed to be attached to the rack at the top most point. Refer to Figure 2-2 for node identification.						
2*	p_{13}	p_{14}				
3*	p_{15}	p_{16}				
4*	p_{17}	p_{18}				
5*	p_{19}	p_{20}				
1*	p_{21}	p_{22}				

where the relative displacement variables q_i are defined as:

$p_i = q_i(t) + U_x(t) i = 1,7,13,15,17,19,21$
$= q_i(t) + U_y(t) i = 2,8,14,16,18,20,22$
$= q_i(t) + U_z(t) i = 3,9$
$= q_i(t) i = 4,5,6,10,11,12$

p_i denotes absolute displacement (or rotation) with respect to inertial space
q_i denotes relative displacement (or rotation) with respect to the pit floor

* denotes fuel mass nodes
U(t) are the three known earthquake displacements

Table 2-17 Results from Stuck Fuel Assembly Evaluation

Item	Calculated Stress (psi)	Allowable Stress (psi)	Safety Factor
Cell Wall Tensile Stress	4,046	18,000	4.45
Cell-to-Cell Weld Shear Stress	15,085	22,500	1.49
Cell Base Metal Shear Stress	10,667	12,000	1.12

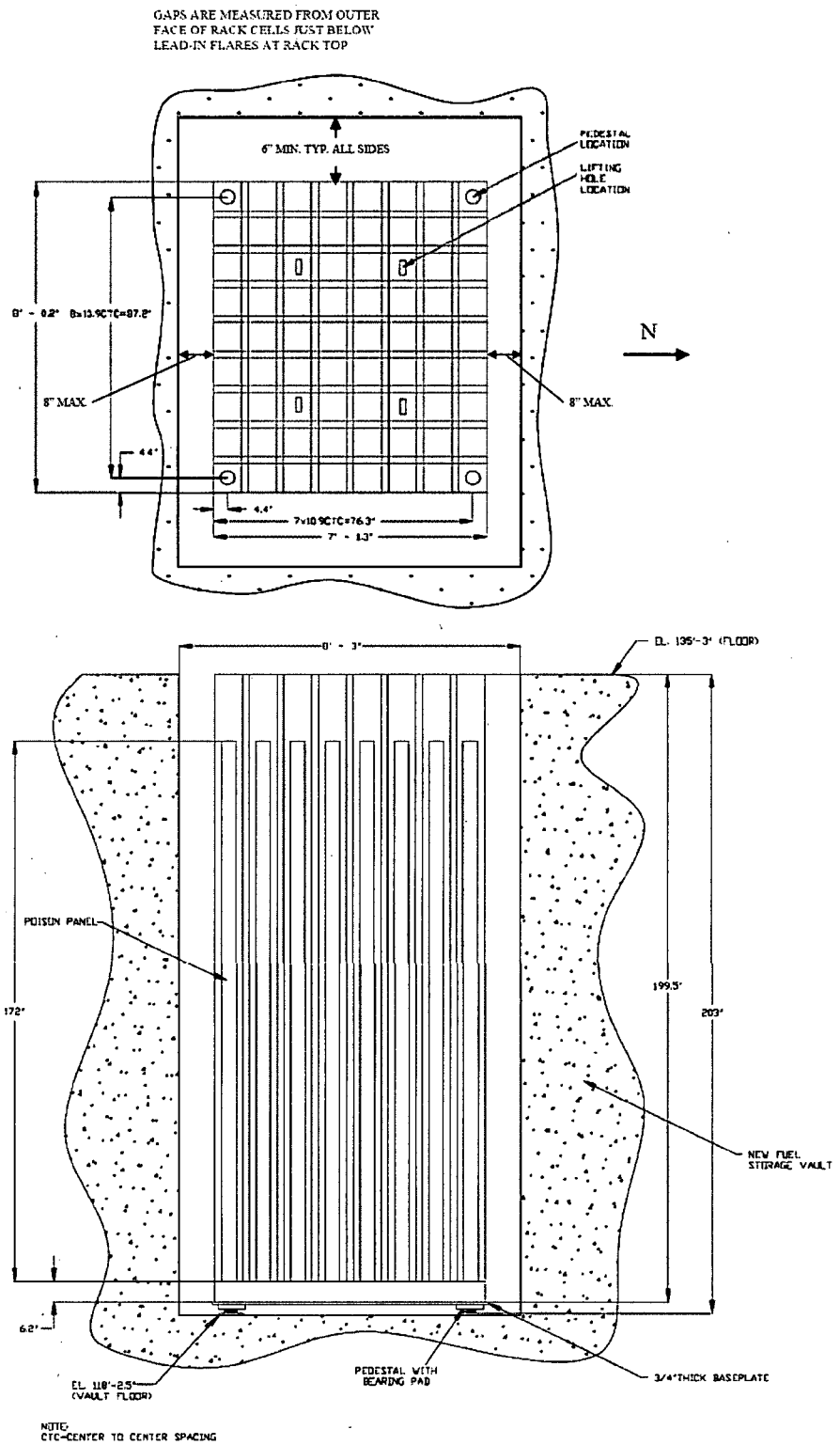

Figure 2-1 Configuration of New Fuel Storage Rack (Sheet 1 of 2)

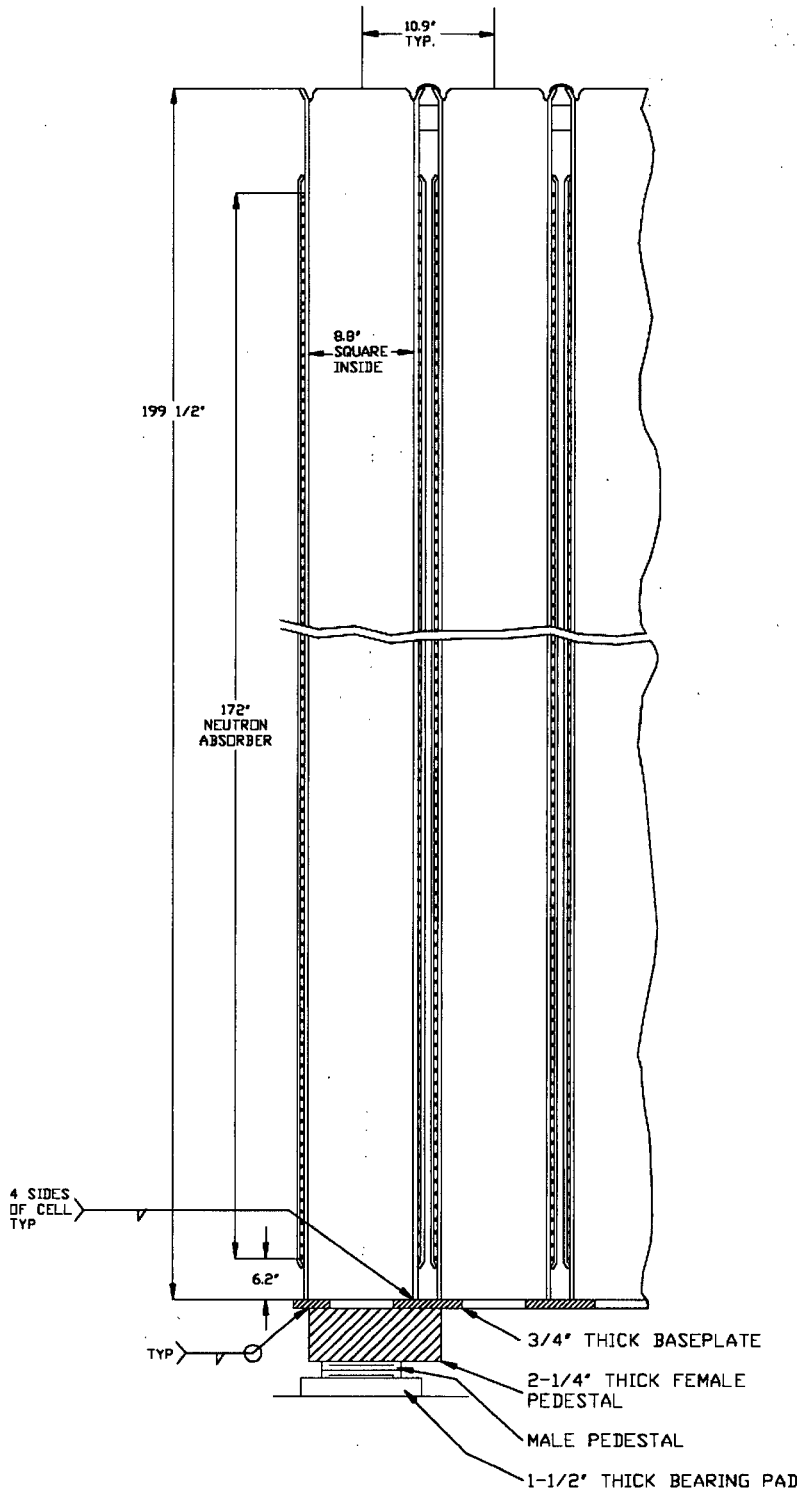

Figure 2-1 Configuration of New Fuel Storage Rack (Sheet 2 of 2)

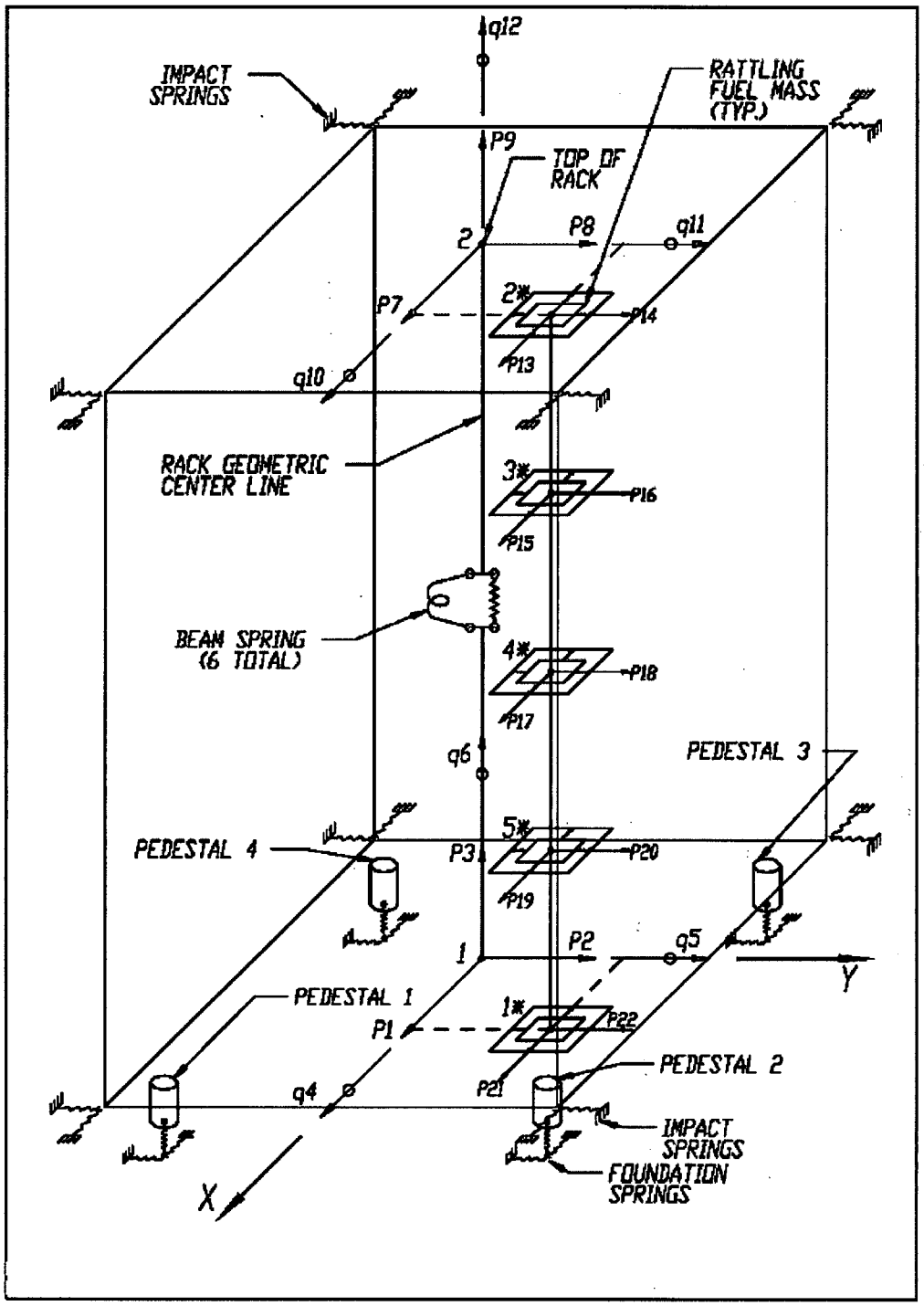

Figure 2-2 Schematic Diagram of Dynamic Model for DYNARACK

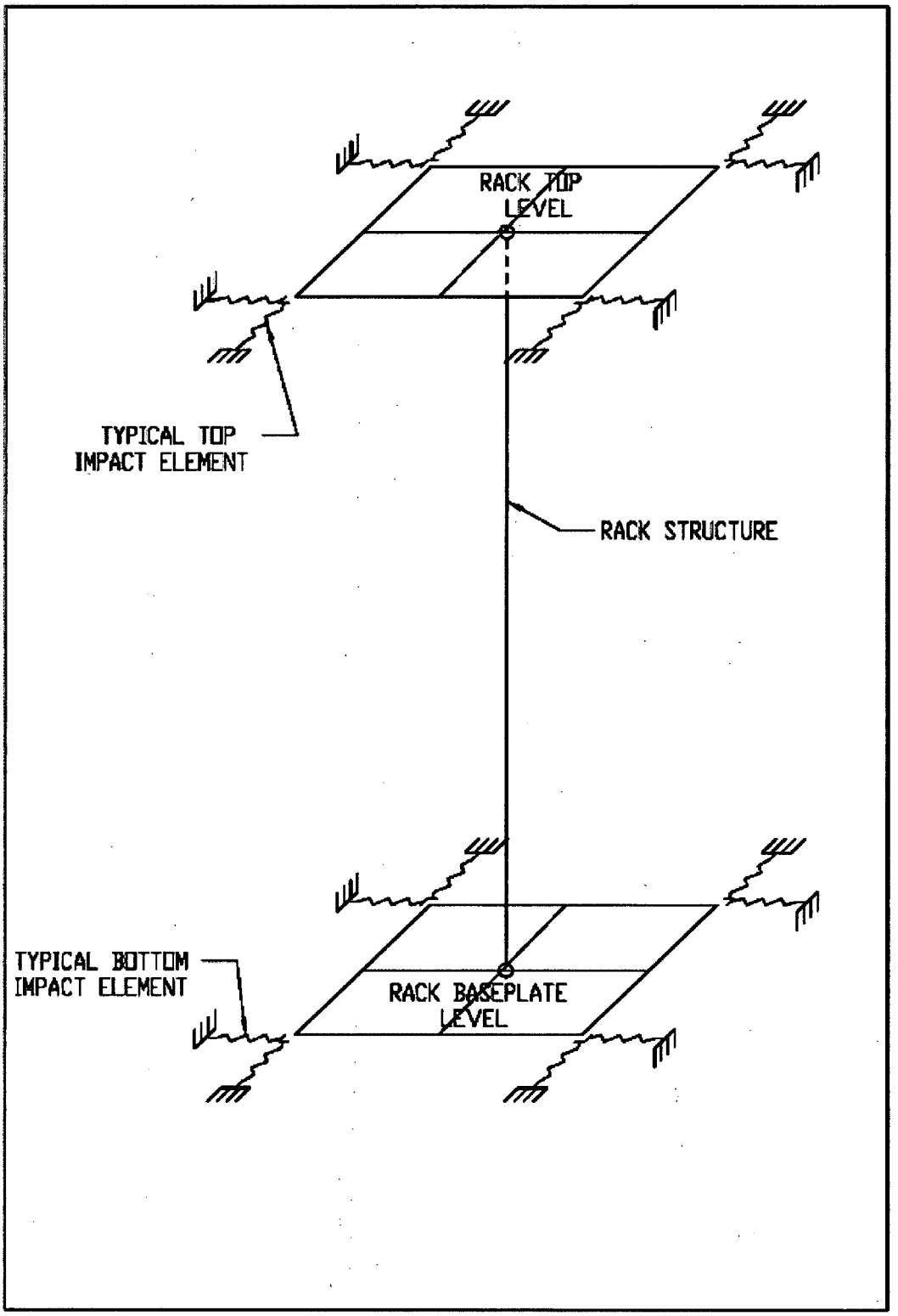

Figure 2-3 Rack-to-Pit Wall Impact Springs

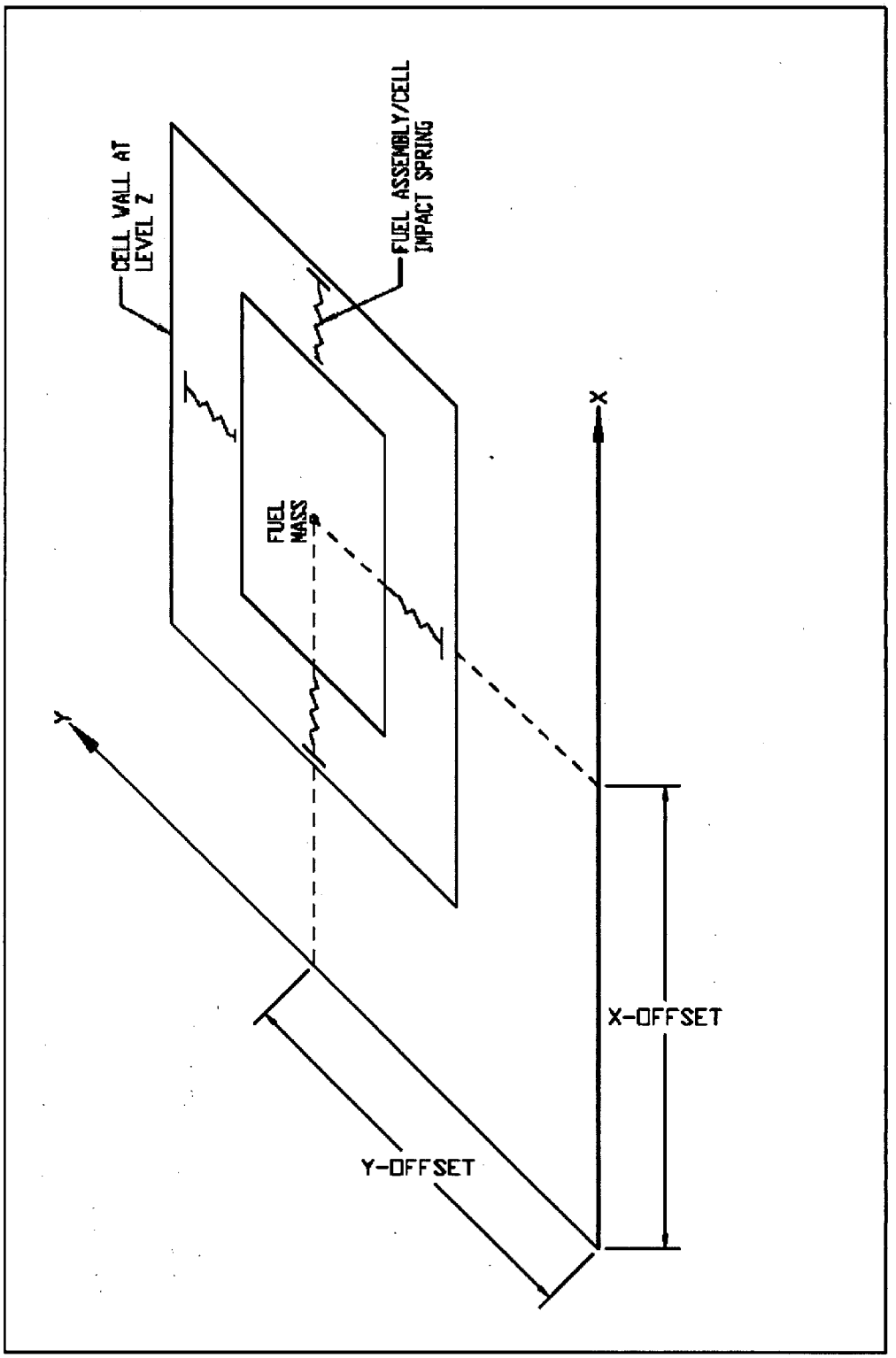

Figure 2-4 Fuel-to-Rack Impact Springs at Level of Rattling Mass

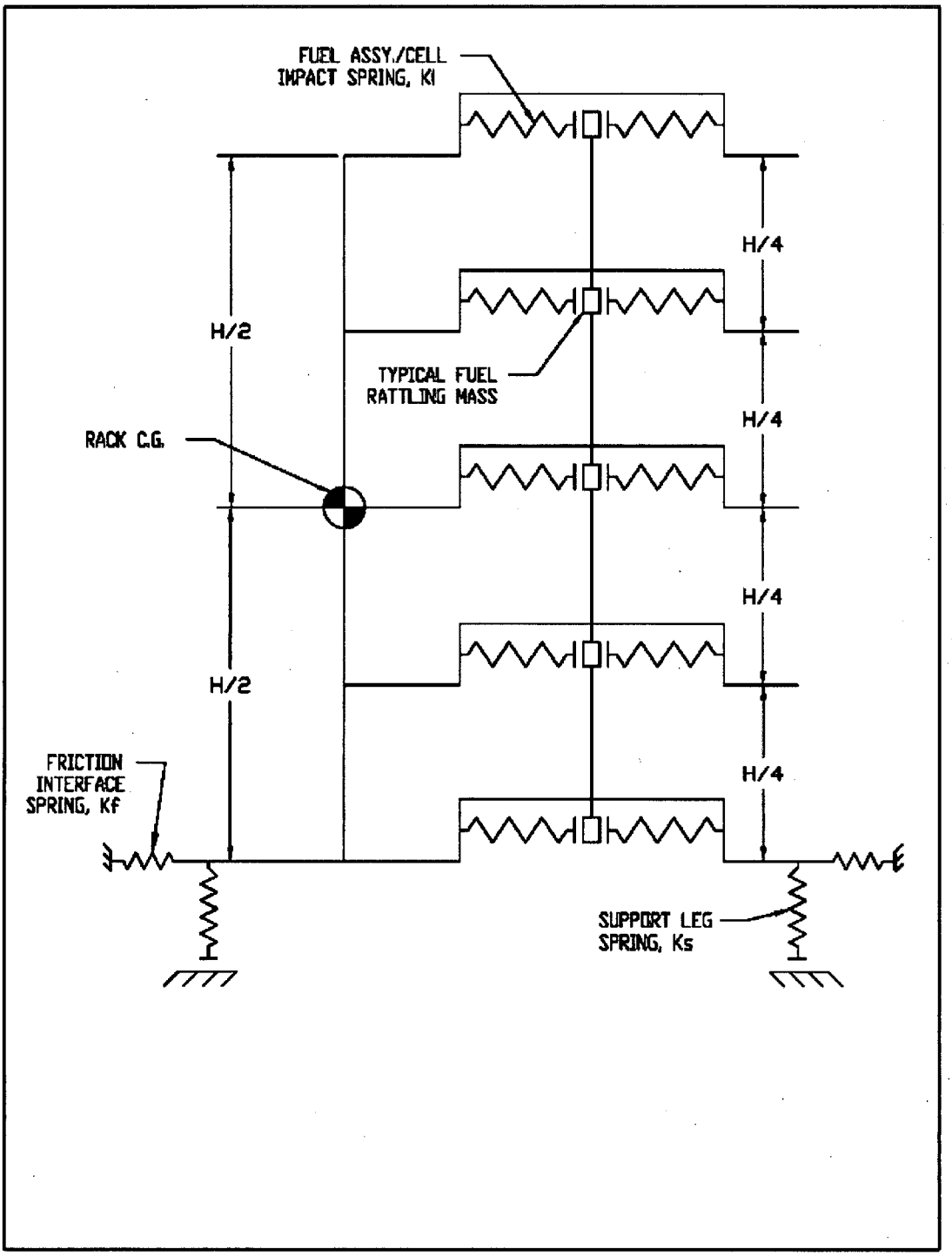

Figure 2-5 Two-Dimensional View of Spring-Mass Simulation

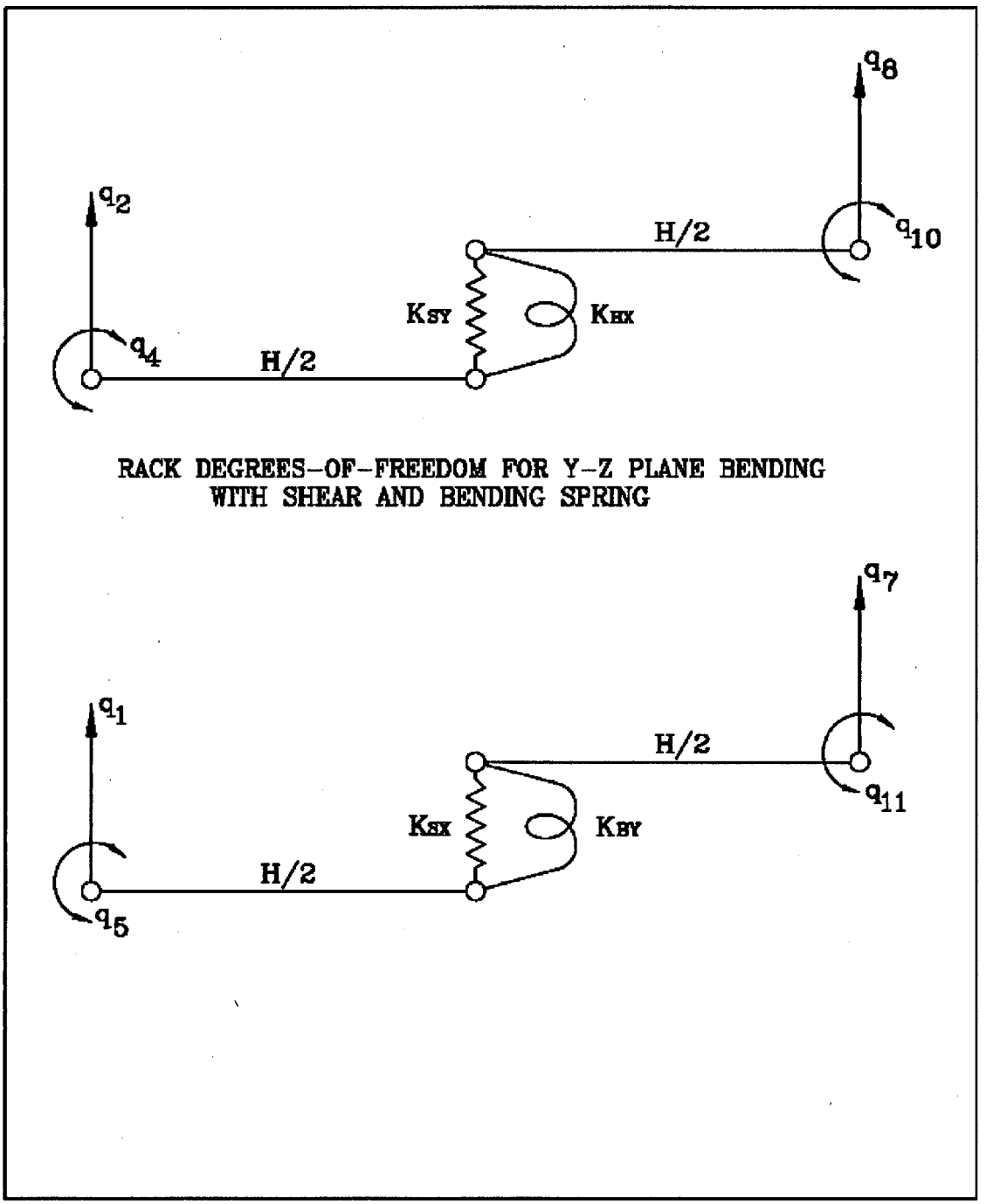

Figure 2-6 Rack Degrees-of-Freedom for X-Y Plane Bending with Shear and Bending Spring

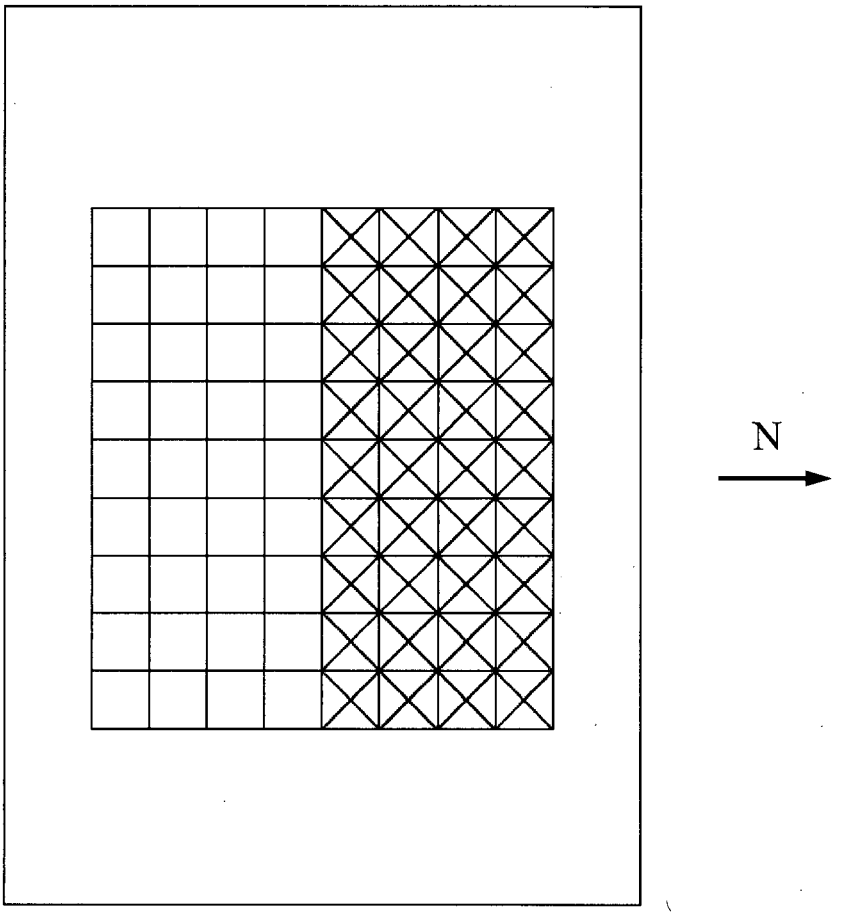

Figure 2-7 Partially Loaded Layout Configuration for Run Number 4

3 REGULATORY IMPACT

The structure/seismic analysis of the AP1000 New Fuel Storage Rack is addressed in subsection 9.1.1.2.1, "New Fuel Rack Design," of the NRC Final Safety Evaluation Report (Reference 2). The completion of the structural/seismic analysis for the AP1000 New Fuel Storage Rack is identified in the Final Safety Evaluation Report as COL Action Item 9.1.6-1.

There are no DCD changes presented in this report that represent an adverse change to the design functions of the AP1000 New Fuel Storage Rack, or to how design functions are performed or controlled. The structural/seismic analysis of the AP1000 New Fuel Storage Rack is consistent with the description of the analysis in subsection 9.1.1.2.1, "New Fuel Rack Design," of the DCD. There are no DCD changes that involve revising or replacing a DCD-described evaluation methodology, or a test or experiment. Nor are there any DCD changes that require a license amendment per the criteria of VIII.B.5.b. of Appendix D to 10 CFR Part 52.

There are no DCD changes that involve design features used to mitigate severe accidents. Therefore, a license amendment based on the criteria of VIII.B.5.c of Appendix D to 10 CFR Part 52 is not required.

The closure of the COL Information Item will not alter barriers or alarms that control access to protected areas of the plant. The closure of the COL Information Item will not alter requirements for security personnel. Therefore, the closure of the COL Information Item does not have an adverse impact on the security assessment of the AP1000.

4 REFERENCES

1. APP-GW-GL-700, AP1000 Design Control Document, Revision 17.

2. NUREG-1793,"Final Safety Evaluation Report Related to Certification of the AP1000 Standard Design", September 2004.

3. Westinghouse Calculation: APP-FS01-S3C-001, Rev. 3, "AP1000 New Fuel Storage Rack Structural/Seismic Analysis," May 2010. (Westinghouse Proprietary)

4. AP1000 Standard Combined License Technical Report, APP-GW-GLR-030, Rev. 0, "New Fuel Storage Rack Design Criticality Analysis," May 2006.

5. Deleted.

6. U.S. NRC Standard Review Plan, NUREG-0800 (SRP 3.8.4, Rev. 1).

7. U.S. NRC Standard Review Plan, NUREG-0800 (SRP 3.7.1, Rev. 2).

8. Westinghouse Documents: APP-FS01-V1-003, APP-FS01-V2-002, and APP-FS01-V6-006, "New Fuel Storage Rack Layout," all Rev. 3, May 2010. (Westinghouse Proprietary)

9. Soler, A.I. and Singh, K.P., "Seismic Responses of Free Standing Fuel Rack Constructions to 3-D Motions," Nuclear Engineering and Design, Vol. 80, pp. 315-329 (1984).

10. Levy, S., and Wilkinson, John, "The Component Element Method in Dynamics," McGraw Hill, 1976.

11. ASME Boiler & Pressure Vessel Code Section III, Subsection NF, 1998 Edition with 2000 Addenda.

12. Holtec Computer Code MR216 (multi-rack transient analysis code, a.k.a. DYNARACK), Version 2.00. QA documentation contained in Holtec Report HI-92844. (Holtec Proprietary)

13. ASME Boiler & Pressure Vessel Code, Section II, Part D, 1998 Edition with 2000 Addenda.

14. ASME Boiler & Pressure Vessel Code, Section III, Appendices, 1998 Edition with 2000 Addenda.

15. Holtec Computer Code DYNAPOST (Analysis Post Processor), v. 2.0. (Holtec Proprietary)

16. Deleted.

17. Deleted.

18. AP1000 Letter Number DCP/HII0012, "Input Spectra for Revised Fuel Rack Analyses", from J.M. Iacovino (Westinghouse Electric Company) to Mr. Evan Rosenbaum (Holtec International), Dated October 18, 2007. (Westinghouse Proprietary)

19. Westinghouse Document: APP-RXS-M8-020, Rev. 1, "AP1000 NSSS / Core Design Interface Document", March 2009. (Westinghouse Proprietary)

20. Rabinowicz, E., "Friction Coefficients of Water Lubricated Stainless Steels for a Spent Fuel Rack Facility," MIT, a report for Boston Edison Company, 1976.

21. Westinghouse Document: APP-GW-G1-003, Rev. 3, "AP1000 Seismic Design Criteria," May 2009. (Westinghouse Proprietary)

22. LS-DYNA, v. 970 Livermore Software Technology Corporation, 2005.

23. Deleted.

24. Westinghouse Calculation: APP-GW-S2R-010, Rev. 3, "Extension of Nuclear Island Analysis to Soil Sites," November 2008. (Westinghouse Proprietary)

25. U.S. NRC Standard Review Plan NUREG-0800 (SRP 3.8.4, Rev. 2).

26. U.S. NRC, Regulatory Guide 1.124, Rev. 1, "Service Limits and Loading Combinations for Class 1 Linear-Type Component Supports," January 1978.

27. U.S. NRC, Regulatory Guide 1.124, Rev. 2, "Service Limits and Loading Combinations for Class 1 Linear-Type Component Supports," February 2007.

28. Deleted.

29. "Marks' Standard Handbook for Mechanical Engineers", 10th Edition, Theodore Baumeister, 1996.

30. Westinghouse Calculation: APP-1000-S2C-056, Rev. 1, "Nuclear Island Seismic Floor Response Spectra," October 2007. (Westinghouse Proprietary)

31. Westinghouse Calculation: APP-FS02-S3C-003, Rev. 1, "Artificial Time Histories for Westinghouse AP1000 Fuel Racks," September 2008. (Westinghouse Proprietary)

32. Westinghouse Calculation: APP-1000-S2C-056, Rev. 2, "Nuclear Island Seismic Floor Response Spectra," March 2010. (Westinghouse Proprietary)

33. Westinghouse Calculation: APP-1000-S2C-093, Rev. 0, "Generation of Artificial Time History SSE Motion for Design of AP1000 Fuel Racks," May 2010. (Westinghouse Proprietary)

34. NUREG/CR-6865 (SAND2004-5794P), "Parametric Evaluation of Seismic Behavior of Freestanding Spent Fuel Dry Cask Storage System," February 2005.

35. AP1000 Letter Number DCP_HII_000015, "Transmittal of Revised Fuel Rack Seismic Input per APP-1000-S2C-093", from S. M. Stipanovich (Westinghouse Electric Company) to Mr. Evan Rosenbaum (Holtec International), Dated May 26, 2010. (Westinghouse Proprietary)

36. Westinghouse Calculation: APP-GW-S2R-010, Rev. 4, "Extension of Nuclear Island Analysis to Soil Sites," March 2010. (Westinghouse Proprietary)

37. Westinghouse Document: APP-FA01-V2-101, Rev. 2, "AP1000 Fuel Assembly Interface Parameters 17x17x168 Active Fuel (.374 DIA fuel Rod)," July 2009. (Westinghouse Proprietary)

38. Westinghouse Document: APP-FA01-V2-102, Rev. 2, "AP1000 Fuel Assembly 17x17x168 Active Fuel Sections and Details," July 2009. (Westinghouse Proprietary)

39. NUREG-0554, "Single-Failure-Proof Cranes. for Nuclear Power Plants," May 1979.