NUREG/CR-0781
RRA-T7901

RRA RADIATION RESEARCH ASSOCIATES
Fort Worth, Texas

THE SKYSHINE-II PROCEDURE: CALCULATION OF THE EFFECTS OF STRUCTURE DESIGN ON NEUTRON, PRIMARY GAMMA-RAY AND SECONDARY GAMMA-RAY DOSE RATES IN AIR

C. M. LAMPLEY

WORK PERFORMED UNDER
CONTRACT NRC-03-78-175 FOR
THE U. S. NUCLEAR REGULATORY COMMISSION
DIVISION OF SITE SAFETY AND ENVIRONMENTAL ANALYSIS
WASHINGTON, D. C. 20555

NOTICE

This report was prepared as an account of work sponsored by an agency of the United States Government. Neither the United States Government nor any agency thereof, or any of their employees, makes any warranty, expressed or implied, or assumes any legal liability or responsibility for any third party's use, or the results of such use, of any information, apparatus product or process disclosed in this report, or represents that its use by such third party would not infringe privately owned rights.

Available from
National Technical Information Service
Springfield, Virginia 22161
Price: Printed Copy $8.00 ; Microfiche $3.00

The price of this document for requesters outside of the North American Continent can be obtained from the National Technical Information Service.

NUREG/CR-0781
RRA - T7901
RE

THE SKYSHINE-II PROCEDURE: CALCULATION OF THE EFFECTS OF STRUCTURE DESIGN ON NEUTRON, PRIMARY GAMMA-RAY AND SECONDARY GAMMA-RAY DOSE RATES IN AIR

C. M. Lampley

Radiation Research Associates, Inc.
Fort Worth, TX 76107

Manuscript Completed: January 1979
Date Published: May 1979

Prepared for
Division of Site Safety and Environmental Analysis
Office of Nuclear Reactor Regulation
U. S. Nuclear Regulatory Commission
Washington, D.C. 20555
Under Contract No.NRC-03-78-175

ABSTRACT

An updated version of the SKYSHINE Monte Carlo procedure has been developed. The new computer code, SKYSHINE-II, provides a substantial increase in versatility in that the program possesses the ability to address three types of point-isotropic radiation sources: 1) primary gamma rays, 2) neutrons, and 3) secondary gamma rays. In addition, the emitted radiation may now be characterized by an energy emission spectrum defined by the user. The enhanced capabilities of the program are the product of a new energy-dependent atmospheric transmission data base developed by Radiation Research Associates, Inc. for each of the three source types described above. Most of the computational options present in the original program have been retained in the new version. Hence, the SKYSHINE-II computer code provides a versatile and viable tool for the analysis of the radiation environment in the vicinity of a building structure containing radiation sources, situated within the confines of a nuclear power plant.

This report describes many of the calculational methods employed within the SKYSHINE-II program. A brief description of the new data base is included. Utilization instructions for the program are provided for operation of the SKYSHINE-II code on the Brookhaven National Laboratory Central Scientific Computing Facility. A listing of the source decks, block data routines, and the new atmospheric transmission data base are provided in the appendices of the report.

ACKNOWLEDGMENTS

The author wishes to express his appreciation to Doug Jones and David Bernardez, members of the RRA staff, who have contributed to the development of the SKYSHINE-II program. The work described within this report was accomplished under the technical direction of M. B. Wells, vice president of Radiation Research Associates, Inc.

TABLE OF CONTENTS

Section		Page
	ABSTRACT	iii
	ACKNOWLEDGMENTS	iv
	LIST OF FIGURES	vi
	LIST OF TABLES	viii
I.	INTRODUCTION	1
II.	GEOMETRY DESCRIPTION	4
III.	ATMOSPHERIC TRANSMISSION DATA	7
IV.	SOURCE DESCRIPTION	11
V.	CALCULATIONAL METHODS	
	5.1 Calculation of the Air-Scattered Dose Rate	13
	5.2 Emission Energy Calculations	15
	5.3 Emission Angle Calculations	24
	5.4 Statistical Weight Calculations	29
	5.5 Geometry Calculations	32
	5.6 Calculation of Percent Deviations	36
VI.	INPUT DATA REQUIREMENTS	39
VII.	SAMPLE PROBLEMS	48
	REFERENCES	69
	APPENDIX A. UTILIZATION INSTRUCTIONS FOR OPERATION OF THE SKYSHINE-II PROCEDURE AT THE BROOKHAVEN NATIONAL LABORATORY CENTRAL SCIENTIFIC COMPUTING FACILITY	70
	APPENDIX B. LISTING OF THE CURVE FIT COEFFICIENTS FOR THE ATMOSPHERIC TRANSMISSION DATA BASE	74
	APPENDIX C. LISTING OF THE SKYSHINE-II SOURCE DECK	100
	APPENDIX D. UTILIZING THE QADMOD/SKYSHINE PROCEDURES FOR CALCULATION OF THE EFFECTS OF STRUCTURE DESIGN ON GAMMA-RAY DOSE RATES	130

LIST OF FIGURES

Figure		Page
1.	Geometry of the SKYSHINE Structure	5
2.	Prompt Fission Gamma-Ray Spectra of ^{235}U	18
3.	Geometry for Polar Angle Rotation	28
4.	Section Bounds for each Structure Surface	33
5.	Comparison of SKYSHINE-II Neutron Calculations for a Point Isotropic Source with Results from the ZAPN Procedure	49
6.	Comparison of SKYSHINE-II Secondary Gamma-Ray Calculations for a Point Isotropic Source with Results from the ZAPGAM Procedure	50
7.	SKYSHINE-II Geometry for Problem Comparison with the ZAPN and ZAPGAM Procedures	51
8.	SKYSHINE-II Geometry for the ANS-6.6.1 Reference Calculation I.2	56
9.	Scattered Dose Rate as a Function of Horizontal Range for the ANS-6.6.1 Reference Calculation I.2	57
A1.	Illustration of the JCL Required to Copy RRASKYSHN2 from Tape	71
A2.	Illustration of the JCL Required to Update and Execute RRASKYSHN2	71
A3.	Illustration of the JCL Required to Execute RRASKYSHN2	72
A4.	Illustration of the JCL Required to Copy RRAPRIGAM from Tape	73
A5.	Illustration of the JCL Required to Copy RRANEUTRN from Tape	73
A6.	Illustration of the JCL Required to Copy RRASECGAM from Tape	73
C1.	SKYSHINE-II Source Deck Listing	101

LIST OF FIGURES (continued)

Figure		Page
D1.	QADMOD Model of Moisture Separator 1C (Taken from Ref. 13)	133
D2.	QADMOD Model of the High Pressure Turbine (Taken from Ref. 13)	134
D3.	Linear Variation in Equivalent Point Source Strength	139
D4.	Angular Variation in Equivalent Point Source Strength	139
D5.	Turbine Operating Floor Plan View (Taken from Ref. 13)	145
D6.	QADMOD Model of Turbine Floor Structure (Taken from Ref. 13)	146
D7.	SKYSHINE Model 1 for Turbine Building when Treating Moisture Separators 1A and 1B (Taken from Ref. 13)	148
D8.	SKYSHINE Model 2 for Turbine Building when Treating Moisture Separators 1C and 1D (Taken from Ref. 13)	148
D9.	SKYSHINE Model 3 for Turbine Building when Treating Crossover Piping (Taken from Ref. 13)	149
D10.	SKYSHINE Model 4 for Turbine Building when Treating Turbines and Main Steam Lines (Taken from Ref. 13)	149

LIST OF TABLES

Table		Page
I.	ENERGY AND ANGLE BOUNDARIES ASSOCIATED WITH THE ATMOSPHERIC TRANSMISSION DATA BASE	8
II.	PROMPT FISSION GAMMA-RAY SPECTRA (UNBIASED)	19
III.	PROMPT FISSION GAMMA-RAY SPECTRA (BIASED)	23
IV.	INPUT PROBLEM DATA FORMATS	40
V.	SCATTERED DOSE RATES FROM THE PROMPT FISSION GAMMA-RAY SPECTRA FOR ^{235}U	54
VI.	LISTING OF ANS-6.6.1 SAMPLE PROBLEM INPUT	59
VII.	ANS-6.6.1 SAMPLE PROBLEM OUTPUT	60
BI.	CURVE FIT COEFFICIENTS FOR ENERGY DEPOSITION VS RANGE BY LINE BEAM GAMMA-RAY SOURCES	75
BII.	CURVE FIT COEFFICIENTS FOR ENERGY DEPOSITION VS RANGE BY LINE BEAM NEUTRON SOURCES	81
BIII.	CURVE FIT COEFFICIENTS FOR SECONDARY GAMMA-RAY ENERGY DEPOSITION VS RANGE BY LINE BEAM SOURCES	90
DI.	REGION COMPOSITIONS FOR MOISTURE SEPARATORS (TAKEN FROM REF. 13)	132
DII.	POINT ISOTROPIC SOURCE DATA FOR INPUT IN SKYSHINE CALCULATIONS (TAKEN FROM REF. 13)	135

I. INTRODUCTION

The SKYSHINE program (Refs. 1, 2, and 3) was originally designed to aid in the evaluation of the effects of structure geometry upon the gamma-ray dose rate at given positions outside of a building housing ^{16}N gamma-ray sources. Such a program is directly applicable to the computation of gamma-ray dose rates in the vicinity of a boiling water reactor system. These dose rates result from the gamma-rays emitted by the ^{16}N sources present in the pipes and associated equipment located within the steam turbine building. SKYSHINE-II is a modification of the original SKYSHINE code which treated point isotropic 6.2 MeV gamma-ray sources. SKYSHINE-II allows continuous energy distributions for point isotropic sources of either neutrons or gamma-rays. This version of the program is an interim version since only the air-scattered dose rate emanating from structure openings is calculated. The limitation on the computational abilities of the program results from the current lack of shield wall transmission and reflection data over the energy range of interest for incident neutrons or gamma-rays. Many of the computational procedures employed by the two versions of the SKYSHINE code are identical. However, large segments of the FORTRAN coding found in SKYSHINE appear in a modified form in SKYSHINE-II in an effort to optimize the program.

As in the original code, SKYSHINE-II considers a rectangular structure enclosed by four walls, a roof, and a floor. Each of the walls and the roof of the building may be subdivided into a maximum of nine different sections, representing different materials or different thicknesses of the same material for those portions of the wall or roof. Openings in the roof or walls may be identified by assigning either a material number of zero, or a thickness of zero to that particular section of the wall or

roof. The Monte Carlo method is used to integrate the emitted radiation over the solid angle subtended by openings in either the walls or the roof of the structure, and to integrate over the energy distribution of the emitted radiation. Particle histories begin by sampling the energy of emission from a normalized cumulative probability distribution based upon either a normal (unbiased) or biased energy distribution defined by the user. For each particle history, a direction of emission from a point source position is sampled from either an isotropic or a biased distribution. The program determines which wall, floor or roof the emitted particle intercepts. If the particle passes through an opening, an estimate of the air-scattered dose rate at the receiver is made. For all other cases, the particle history is terminated without making an estimate.

The air-scattered dose rate calculations are based upon a data set of air transmission factors derived from a series of Monte Carlo calculations performed for point monodirectional sources embedded within a homogeneous medium of air. Results from these calculations provide transmission factors due to air-scattering as a function of the source emission energy, the source-receiver separation distance, and the polar angle of emission, defined as the angle subtended by the direction of the emitted radiation and the source-receiver axis. Three such data bases provide the user the option of choosing from one of three radiation source types: 1) neutrons, 2) primary gamma rays, or 3) secondary gamma rays. Only one source type and one emission spectrum may be defined for a given SKYSHINE-II problem.

The SKYSHINE-II program lists the air-scattered dose rate for each wall, the roof, and the floor of the structure so that the shielding effect of any given part of the structure may be evaluated. The program, therefore, not only provides accurate estimates of the boundary dose rates but also indicates those areas where design changes will have the most significant effect upon the boundary dose rates.

A complete description of the program, sample problems, and a listing of the SKYSHINE-II source decks are included in this report. A

description of the SKYSHINE-II geometry is provided in Section II. The atmospheric transmission data are discussed in Section III. The radiation source is described in Section IV, and the calculational methods are detailed in Section V. Detailed information describing the input data formats for the SKYSHINE-II program is given in Section VI, and a sample problem is given in Section VII. Included in Section VII is information pertaining to the validation of the SKYSHINE-II program. Given in Appendix A is information on how to access the SKYSHINE-II files which reside at the Brookhaven National Laboratory Central Scientific Computing Facility (BNL-CSCF). The atmospheric transmission data used to calculate the air-scattered dose rate are listed in Appendix B. A listing of the SKYSHINE-II source decks and block data routines is given in Appendix C. Information pertaining to the coupling of the QADMOD and SKYSHINE programs for the purpose of evaluating the effects of structure design on gamma-ray dose rates is presented in Appendix D.

II. GEOMETRY DESCRIPTION

The SKYSHINE-II geometry consists of a structure geometry and a source-receiver geometry. The structure geometry is limited to a simple right parallelepiped whose sides are parallel to the axis of an X,Y,Z rectangular coordinate system. Both the radiation source and the receiver are assumed to be at points defined in terms of the X,Y,Z coordinate system used in defining the structure geometry.

The six sides of the parallelepiped are referred to throughout this report as the four walls, roof, and floor of the structure or building. Orientation of the building with respect to the coordinate system is shown in Fig. 1. The location of each wall, the floor, and the roof is defined in terms of the axis intercept of the plane surface representing each structure component. For example, the X1 wall and the X2 wall, which are perpendicular to the X axis as shown in Fig. 1, are defined by the X intercepts, X1 and X2, respectively. The location of the floor and roof of the building is defined by the Z1 and Z2 intercepts, respectively. The assumption is made that: $X1 < X2$, $Y1 < Y2$, and $Z1 < Z2$.

As indicated in Fig. 1, each of the four walls and the roof may be divided into as many as nine sections of different material compositions and thicknesses. Each section of each wall is numbered as indicated in Fig. 1. A material-thickness number MAT is assigned to each section in order to identify the material and wall thickness of that section. The SKYSHINE-II procedure does not currently consider 1) the air scattering of radiation after reflection by the walls or floor nor 2) the air scattering of radiation after transmission through the walls or roof sections that are not voids nor 3) the direct radiation reaching the detector after being attenuated by a wall or roof section that is not a void. Any time a particle emitted by the source hits the floor or a wall or roof section that is not a void section, the particle history is terminated, and

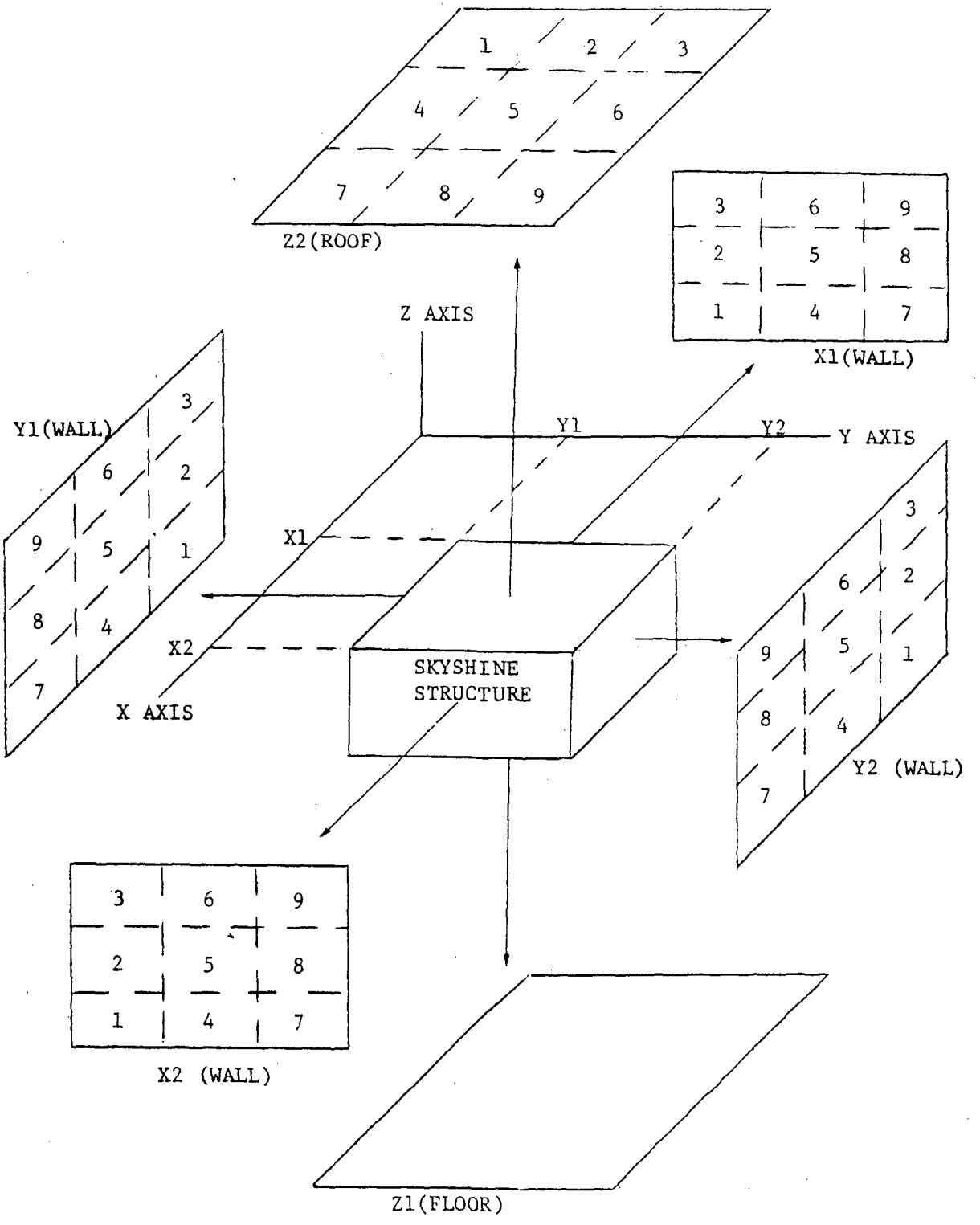

Fig. 1. Geometry of the SKYSHINE Structure

no contribution of the air-scattered dose rate at the receiver position is evaluated. At the present time, the material composition of a section can be taken to be either steel, concrete or a void. In SKYSHINE-II any material composition other than a void can be assigned to a section that is a non-void section. The procedure only needs to determine if the section hit by the source particle contains a material composition or a void section. Similarly, the SKYSHINE-II procedure is not dependent upon the thickness of a non-void section. Therefore, any non-void section need only be given an arbitrary non-zero thickness. SKYSHINE-II is limited to fifteen different material compositions and wall thicknesses. Air is assumed for all space inside and outside the structure.

Void areas or openings in the structure walls and roof may be represented by one of two methods. If a wall thickness of zero has been specified as one of the fifteen possible combinations, this MAT number may be specified for each section to be voided. Or, a MAT number of zero may be specified for the void sections. The MAT numbers are input via the MAH parameter which is defined for each wall section.

The floor of the structure is assumed to consist of only one section and is considered as semi-infinite. It should be remembered that the present version of SKYSHINE-II calculates the air-scattered dose rate for only that radiation which passes through structure openings. Therefore, if no void areas are defined for the structure geometry being considered, there will be no computations performed by the program.

The location of the source and receiver positions are defined by the X, Y, and Z coordinates of the point location. Source points must be located within the structure and receiver points must be located outside the structure. Receiver positions may be located at points of interest for separation distances of up to 1500 meters (4921 feet) from the source. Receivers may be located as close to the structure as is desired. Each problem is limited to no more than one hundred source points. Only five receiver locations may be considered per problem.

III. ATMOSPHERIC TRANSMISSION DATA

As previously stated, SKYSHINE-II accepts point sources of either neutrons or gamma rays. In effect, SKYSHINE-II considers three sources of radiation: 1) neutrons, 2) primary gamma rays, and 3) the secondary gamma rays produced as by-products of various neutron interactions in air. In particular, these interactions include the neutron capture and the inelastic scattering processes which take place between neutrons and the nitrogen and oxygen atoms present in the atmosphere. SKYSHINE-II may be used to estimate the air-scattered dose rate at defined receiver locations resulting from that portion of the emitted radiation which passes through openings in the structure geometry. As a basis for these calculations, the program utilizes a data base of energy and angle-dependent curve fit coefficients which characterize the air-scattered dose rates for point monodirectional sources located in an infinite medium of air. There exists a separate data base for each of the three sources considered by the program (i.e., neutrons, primary gamma rays and secondary gamma rays.

The data base employed by SKYSHINE-II is the result of an extensive curve fitting procedure applied to a large number of computations performed by RRA (Ref. 4). The original set of computations, performed with the ZAP, ZAPN, and ZAPGAM (Refs. 5, 6, and 7) computer codes for primary gamma-ray, neutron and secondary gamma-ray sources, respectively, provided energy deposition estimates as a function of source-receiver separation distance for point monodirectional sources located in an infinite medium of air. For each radiation source, primary gamma rays or neutrons, computations were made for a series of emission energy intervals and polar angle intervals, the polar angle being defined as the angle between the direction of emission and the source-receiver axis. These energy and angle subdivisions have been maintained in the SKYSHINE-II data base and are listed in Table I for each of the radiation sources considered.

TABLE I. ENERGY AND ANGLE BOUNDARIES ASSOCIATED WITH THE ATMOSPHERIC TRANSMISSION DATA BASE

Polar Angle of Emission Boundaries (degrees)

(identical for each radiation source)

0.0	5.0	20.0	60.0	100.0
1.0	7.0	30.0	70.0	120.0
2.0	10.0	40.0	80.0	140.0
3.0	15.0	50.0	90.0	180.0

Bounds of Source Energy Intervals (MeV)

Primary Gamma Rays	Neutrons
10.00	15.00
9.00	13.50
8.00	12.00
7.00	10.00
6.00	7.79
5.00	6.07
4.00	3.68
3.00	2.86
2.00	2.23
1.00	1.74
5.00-1	1.35
1.00-1	8.23-1
1.00-2	5.00-1
	3.03-1
	1.84-1
	6.76-2
	2.48-2
	9.12-3
	3.35-3
	1.00-3

An analysis of the energy deposition results as a function of separation distance, for each of the energy and polar angle intervals, revealed that a good fit of the data could be accomplished by using an equation of the form

$$ED(X) = e^{A} X^{B} e^{-CX}$$

where X is the source-receiver separation distance, and the constants A, B, and C are curve fit coefficients defined for a specific radiation source (neutron, primary gamma ray or secondary gamma ray), and a specific energy and polar angle of emission interval (Table I). The curve fit coefficients A, B, and C make up the data set upon which the air-scattered dose rates calculated by SKYSHINE-II are based. There exists for each radiation source, a set of coefficients of the type described above. A more detailed description of the original data and the subsequent results obtained through the implementation of the curve fitting procedure is presented in Ref. 4.

For neutrons and secondary gamma rays, the original calculations provided a measure of the energy deposition in units of keV of energy deposited $-m^{-3}-sec^{-1}$/source neutron $-sec^{-1}$. The primary gamma-ray results were in units of keV of energy deposited $-m^{-3}-sec^{-1}$/keV of source energy $-sec^{-1}$. A conversion constant is applied to the results obtained with the equation given above in order to obtain the desired units of millirads (air) $-year^{-1}$/source particle $-sec^{-1}$.

The original ZAP calculations were made for an air density of 1.225×10^{-3} gm/cm^3. It may be desirable to perform SKYSHINE-II calculations for an air density other than that of the original data. In order to permit such a conversion of the data, the methods described by Zerby (Ref. 8) to adjust the dose rate in air at a given density to the corresponding value at any air density have been incorporated into SKYSHINE-II. According to Zerby, if the dose rate $DOSE(\rho_1, r_1)$ is known for all points r_1 in air of density ρ_1, then for air of density ρ_2, the dose rate is given by

$$\text{DOSE } (\rho_2, r_2) = \frac{\rho_2^{\,2}}{\rho_1^2} \text{ DOSE } (\rho_1, r_1)$$

where $r_2 = (\rho_1/\rho_2)\ r_1$.

The air-scattered dose rates in SKYSHINE-II are adjusted to the air density defined by the input parameter, ARHO.

IV. SOURCE DESCRIPTION

The radiation source in SKYSHINE-II may be either neutrons, primary gamma rays, or secondary gamma rays. Only one source type may be used in a given problem. Each volume source is represented in SKYSHINE-II by a series of point isotropic sources contained within the defined structure. The number of point sources which may be employed to define the true volumetric source contained within a pipe or equipment component is restricted to no more than one hundred. Each point source is characterized by a source weight, self-attenuation factor, emission angle biasing parameters, and the X, Y, Z coordinates which define its location within the structure geometry. Attenuation of the emitted radiation by the equipment component which contains the source must be considered in the specification of the self attenuation factor, ATTEN, associated with the point source.

In the SKYSHINE-II program, the source points may emit radiation according to a continuous energy distribution defined by the user. Only one distribution may be defined for a given problem. A cumulative probability distribution (cpd) representative of the emission spectrum of interest is used to determine the energy of the emitted radiation. Either normal or biased cpd's may be employed. In addition to the cpd, the total spectral strength, obtained by integrating the differential energy distribution over the energy region of interest is input. If a biased cpd is to be used, the program requires the additional input of both the normal and biased differential distribution (particles -Mev^{-1}/sec) in order to properly compensate for the biasing of the emitted radiation.

A complete description of the emission energy and angle calculations performed within the SKYSHINE-II program is provided in subsections 5.2 and 5.3 of this report.

The total number of particle histories generated from each point source is specified by the product of two input parameters NHISTA and NHISTE. The parameter NHISTE specifies the number of particles whose energy of emission is sampled from the cpd defined by the user. For each of these sampled particle energies, NHISTA particles will be sampled from the source angular distribution. Therefore, a total of NHISTA · NHISTE histories is generated by the program. The number of source particle histories that should be used for any given SKYSHINE-II problem depends largely upon the complexity of the geometry, the emission spectrum, and the accuracy of the results desired.

Because a radiation source may not be represented in SKYSHINE-II with a detailed three-dimensional model of the equipment, it is often desirable or necessary to make a detailed model of the component for use in a point kernel code such as QADMOD (Ref. 9). Point kernel calculations are made to determine an equivalent point source for use in SKYSHINE-II. This process is discussed in detail in Appendix D.

The SKYSHINE-II program will calculate the air-scattered dose rate from any number of source points (within the maximum of one hundred), record the results, and continue with a second set of source points that may represent a second piece of equipment. In addition to recording the results for each individual set of source points, the program will also accumulate the results from specified sets of points and report the accumulated results to give a total dose rate for all source components considered in the calculation.

V. CALCULATIONAL METHODS

This section provides a detailed description of many of the computational methods employed within the SKYSHINE-II program. Included is a discussion of the transport equation which is used to characterize the air-scattered dose rate emanating from structure openings, as well as a discussion on procedures used in sampling the energy and angular distribution of the emitted radiation. A special section is devoted to the problem of weighting the individual estimates. A general discussion is presented concerning various geometrical calculations of interest and concerning the calculation of standard deviations which are provided as an indication of the statistical fluctuations of the results.

5.1 Calculation of the Air-Scattered Dose Rate

If one or more of the sections describing the structure walls or roof is assigned a thickness of zero or is designated as a void, then the direct radiation escaping through that area may be scattered by the air into the receiver position. This component of the dose rate is computed within the SKYSHINE-II program by evaluating the equation

$$ASD(X) = \int_E \int_{\Omega_o} \frac{N(E)}{4\pi} AS(\theta,X,E)\, d\Omega dE \ .$$

$AS(\theta, X, E)$ is the air-scattered dose rate at a receiver located at a distance X from a monodirectional point source which emits radiation at an energy E in the range E to E + dE in the direction θ in $d\Omega$ about θ measured from the source-receiver axis. The number of particles per unit energy per second emitted at the energy E is specified by the source enrgy spectrum N(E). Note, that the emission is assumed to be isotropic. The equation for ASD is integrated over

the solid angle Ω_o subtended by the structure opening at the source point, if the ground surface is not visible within that solid angle. If the ground surface is visible within the solid angle subtended by the opening, then the angular integration is performed only over that portion of the solid angle which lies above the ground surface. The additional integration is performed over the spectral region of emission.

The air-scattered dose rate is calculated with the following equation

$$AS(\theta,X_2,E) = CON \cdot e^{A(IA,IE)} \cdot X_1^{B(IA,IE)} \cdot e^{-X_1 \cdot C(IA,IE)}/AMODI^2$$

where

$$AMODI = 1.225X10^{-3}/\rho$$

$$X_2 = (1.225X10^{-3}/\rho) \cdot X_1$$

ρ = air density of interest (gm/cm^3).

Note the inclusion of the Zerby transformation parameters which allow the user to perform calculations for an air density other than the $1.225X10^{-3}$ gm/cm^3 which characterize the SKYSHINE-II data base. The coefficients A, B, and C are extracted from the appropriate data base depending upon the type of radiation source chosen (i.e., neutron, primary gamma ray, or secondary gamma ray). The index IA indicates the polar angle interval within which the angle θ lies, while the index IE provides the emissive energy interval within which the energy E lies (Table I).

A constant, CON, is used in order to convert the results to the proper units, mrads (air)/year. If the radiation source of interest is either neutrons or secondary gamma rays the appropriate constant is given by

$$\mathrm{CON} = \frac{1}{1.225\mathrm{X}10^{-3}} \left(\frac{\mathrm{cm}^3}{\mathrm{gm}}\right) 10^{-6} \left(\frac{\mathrm{m}^3}{\mathrm{cm}^3}\right) 1.6021\mathrm{X}10^{-9} \left(\frac{\mathrm{ergs}}{\mathrm{keV}}\right) 10^{-2} \left(\frac{\mathrm{rads(air)}}{\mathrm{ergs/gm}}\right)$$

$$\cdot\ 10^3 \left(\frac{\mathrm{mrads(air)}}{\mathrm{rads(air)}}\right) 3600 \left(\frac{\mathrm{sec}}{\mathrm{hr}}\right) 365.25 \left(\frac{\mathrm{days}}{\mathrm{year}}\right) 24 \left(\frac{\mathrm{hr}}{\mathrm{day}}\right)$$

$$= 4.70822\mathrm{X}10^{-11} \left(\frac{\mathrm{m}^3\text{-sec}}{\mathrm{keV}} \ \frac{\mathrm{rads(air)}}{\mathrm{hr}}\right) \cdot 8.766\mathrm{X}10^{6} \ \frac{\mathrm{hr}}{\mathrm{year}} \frac{\mathrm{mrads(air)}}{\mathrm{rads(air)}}$$

$$= 4.12723\mathrm{X}10^{-4} \left(\frac{\mathrm{m}^3\text{-sec}}{\mathrm{keV}} \ \frac{\mathrm{mrads(air)}}{\mathrm{year}}\right) .$$

As previously stated in Section III, the data base for neutrons and secondary gamma rays has units of keV-m^{-3} - sec^{-1}/source neutron -sec^{-1}. Therefore, the constant term CON will convert the results of the integral transport equation to units of mrads(air)/year. If the source is primary gamma rays, the constant is given by

$$\mathrm{CON} = 4.12723\mathrm{X}10^{-4} \left(\frac{\mathrm{m}^3\text{-sec}}{\mathrm{keV}} \ \frac{\mathrm{mrads(air)}}{\mathrm{year}}\right) \cdot \mathrm{E} \ \frac{\text{MeV of source energy}}{\text{source photon}} \cdot 10^3 \ \frac{\mathrm{keV}}{\mathrm{MeV}}$$

where the photon energy is measured in MeV instead of keV. Note the inclusion of the term E, which represents the energy of the emitted photon. As described in Section III, the primary gamma-ray data base has units of keV - m^{-3} - sec^{-1}/keV of source energy -sec^{-1}. Hence, the constant yields results in units of mrads(air)/year, as required.

5.2 Emission Energy Calculations

A major modification incorporated into the SKYSHINE-II program is the ability to describe a point source with a continuous energy distribution. The energy of emission for a given source particle is sampled from a normalized cumulative probability distribution (cpd). If N(E) is the spectrum of

emission, characterized as number of particles emitted at the energy E, MeV^{-1}/sec, the normalized cpd is defined by the integral equation

$$CPD(E) = \frac{\int_{E_\ell}^{E} N(E)\, dE}{\int_{E_\ell}^{E_u} N(E)\, dE}$$

where E_ℓ and E_u are the lower and upper energy limits, respectively, of the spectrum, and the integral present in the denominator represents a normalization constant. Since the function is normalized, the cpd ranges in value from 0 to 1.

The SKYSHINE-II program requires the user to input values for the cpd as a function of energy and the corresponding energy at which these values are defined, for up to twenty values.

The first value for the cpd must be equal to 0 and correspond to the lower energy limit (E_ℓ) of the spectrum, while the final value of the cpd must be equal to 1 and correspond to the upper energy limit (E_u) of the spectrum. An energy of emission is determined by the following equation

SMEV = EG(I-1) + RATIO • (EG(I) - EG(I-1))

where

RATIO = (RN-CPD(I-1))/(CPD(I)-CPD(I-1))

CPD(I) > RN > CPD(I-1)

SMEV is the energy of emission in MeV, CPD(I) is the value of the cpd evaluated at the Ith energy which is defined by EG(I) in MeV, and RN is a random number sampled from a uniform distribution between 0 and 1. After the energy of emission has been determined, the particle weight is

adjusted by the total strength of the source spectrum

$$\text{WEIGHT} = \int_{E_\ell}^{E_u} N(E)\, dE$$

which represents the total number of particles emitted/sec within the defined spectrum.

As an example of the procedure outlined above for selection of source emission energy, consider the prompt fission gamma-ray spectra for ^{235}U. Measurements by Peelle and Maienschein (Ref. 10) indicate a differential energy distribution (photons fission^{-1}MeV^{-1}) as shown in Fig. 2. The spectrum of Fig. 2 may be approximated (Ref. 11) by the segmented fit

$$N(E) = \begin{cases} 6.6 & 0.1<E< 0.6 \text{ MeV} \\ 20.2 \exp(-1.78E) & 0.6<E< 1.5 \text{ MeV} \\ 7.2 \exp(-1.09E) & 1.5<E<10.5 \text{ MeV} . \end{cases}$$

We shall consider only that portion of the spectrum between 0.1 and 10.0 MeV because the curve fit coefficients for primary gamma rays are not available for energies greater than 10.0 MeV (Table I). Since the spectrum of interest is represented by analytical functions, it is possible to evaluate analytically the integrals necessary to define the normalized cpd. Listed in Table II are values for the differential energy distribution and the corresponding cpd for twenty energies within the spectrum. The cpd was obtained by direct integration of the segmented function given above. In addition, Table II shows the total strength as obtained by integrating over the entire spectrum of interest.

Care must be exercised when specifying the energy spectrum of emission. The parameter given by the integral equation

$$\text{WEIGHT} = \int_{E_\ell}^{E_u} N(E)\, dE$$

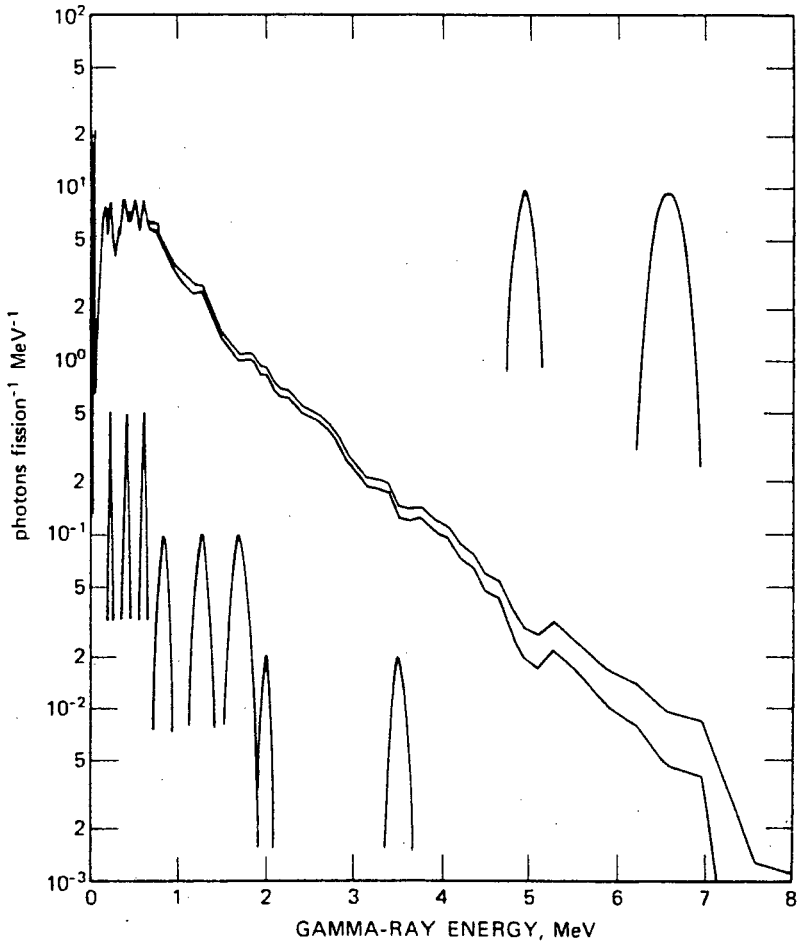

Fig. 2. The energy spectrum of gamma rays emitted within 69 nsec after fission of ^{235}U by thermal neutrons. The two lines, which represent the random (largely propagated from counting statistics) 2/3 confidence limits on the spectrum, are drawn as straight lines between adjacent mean window energies. The nearly Gaussian shapes shown at the lower left and upper right indicate the energy resolution (From Ref. 10).

TABLE II. PROMPT FISSION GAMMA-RAY SPECTRA (UNBIASED)

Energy* (MeV)	Spectra $\left(\frac{\text{photons}}{\text{fission-MeV}}\right)$	Normalized CPD
1.00-1	6.600+0	0.
6.00-1	6.600+0	4.285-1
6.50-1	6.351+0	4.716-1
7.00-1	5.811+0	5.110-1
7.50-1	5.316+0	5.471-1
8.00-1	4.863+0	5.801-1
8.50-1	4.449+0	6.103-1
9.00-1	4.070+0	6.380-1
9.50-1	3.724+0	6.633-1
1.00+0	3.406+0	6.864-1
1.10+0	2.851+0	7.269-1
1.20+0	2.386+0	7.608-1
1.30+0	1.997+0	7.892-1
1.40+0	1.671+0	8.129-1
1.50+0	1.399+0	8.328-1
2.00+0	8.139-1	9.031-1
3.00+0	2.736-1	9.674-1
4.00+0	9.200-2	9.891-1
5.00+0	3.093-2	9.963-1
1.00+1	1.329-4	1.000+0

Total Integrated Source Strength:

$$\int_{0.1}^{10.0} N(E)dE = 7.702 \text{ (photons/fission)}$$

*(Read 1.00-1 as 1.00×10^{-1}.)

is assumed to have units of particles/sec, as mentioned earlier in this subsection. The prompt fission gamma-ray spectra defined above possessed units of photons $\text{fission}^{-1}\text{MeV}^{-1}$. Therefore, the integrated parameter WEIGHT has the units photons/fissions. In order to assure proper units in the final results, it is tacitly assumed that the source strength is given by one fission/sec and that this factor is folded into the differential spectrum. This condition yields the implied units of photons/sec for the parameter WEIGHT and hence the proper units are maintained. If the source strength is not equal to one fission/sec then the spectrum N(E) must be suitably modified to yield units of $\text{photons-MeV}^{-1}/\text{sec}$.

Under certain conditions, it may be advantageous to sample the emission energy from a biased distribution K(E) instead of the normal distribution N(E) according to the same integral formula

$$\text{CPD}(E) = \frac{\int_{E_\ell}^{E} K(E)\, dE}{\int_{E_\ell}^{E_u} K(E)\, dE}$$

The biased cpd still remains normalized such that it ranges in value from 0 at energy E_ℓ to a value of 1 at energy E_u. The equations used to sample the energy of emission remain unchanged. However, the particle weight must be adjusted to account for the sampling from a biased distribution. Therefore, the weight adjustment parameter is given by

$$\text{WEIGHT} = \left(N(E)/K(E)\right) \frac{\int_{E_\ell}^{E_u} K(E)\, dE}{\int_{E_\ell}^{E_u} N(E)\, dE}$$

As in the unbiased case, the particle weight must also be adjusted to account for the total source strength. Hence, the final particle weight adjustment for selection of the emission energy from a biased distribution is given by

$$\text{WEIGHT} = \Big(N(E)/K(E)\Big) \quad \frac{\int_{E_\ell}^{E_u} K(E)\ dE}{\int_{E_\ell}^{E_u} N(E)\ dE} \cdot \int_{E_\ell}^{E_u} N(E)\ dE$$

$$\text{WEIGHT} = \Big(N(E)/K(E)\Big) \quad \int_{E_\ell}^{E_u} K(E)\ dE$$

For the case of the biased distribution, it is necessary to input in addition to the cpd, the values of the normal distribution N(E) and the biased distribution K(E) at the defined set of energies. In addition, the total strength of the normal and biased distributions integrated over the spectrum, namely

$$\text{SOURN} = \int_{E_\ell}^{E_u} N(E)\ dE$$

and

$$\text{SOURK} = \int_{E_\ell}^{E_u} K(E)\ dE$$

must be input.

Reconsider the example cited above for the prompt fission gamma-ray spectra for ^{235}U. If the user were to sample emission energies from a "flat" distribution (i.e., K(E) = 1.0) instead of the normal distribution N(E), the cpd would be defined as

$$CPD(I) = \frac{\int_{E_\ell}^{E} K(E)\, dE}{\int_{E_\ell}^{E_u} K(E)\, dE}$$

$$CPD(I) = \frac{E(I) - E(1)}{E(I_{max}) - E(1)}$$

where E(I) represents, as before, the energy in MeV at which the Ith value of the cpd is defined. The index I_{max} indicates the upper energy limit of the spectrum ($I_{max} \leq 20$). As previously stated, for cases in which the emission energy is selected from a biased distribution, the program requires as input the following parameters

CPD(I), E(I), N(I), K(I)

and the integrated parameters

$$\int_{E_\ell}^{E_u} N(E)\, dE \quad \text{and} \quad \int_{E_\ell}^{E_u} K(E)\, dE$$

These values are listed in Table III with respect to the example presented herein.

TABLE III. PROMPT FISSION GAMMA-RAY SPECTRA (BIASED)

Energy (MeV)	Normal Spectra $\left(\frac{\text{photons}}{\text{fission-MeV}}\right)$	Biased Spectra $\left(\frac{\text{photons}}{\text{fission-MeV}}\right)$	Normalized (Biased) CPD
1.00-1	6.600+0	1.000+0	0.
6.00-1	6.600+0	1.000+0	5.051-2
6.50-1	6.351+0	1.000+0	5.556-2
7.00-1	5.811+0	1.000+0	6.061-2
7.50-1	5.316+0	1.000+0	6.566-2
8.00-1	4.863+0	1.000+0	7.071-2
8.50-1	4.449+0	1.000+0	7.576-2
9.00-1	4.070+0	1.000+0	8.081-2
9.50-1	3.724+0	1.000+0	8.586-2
1.00+0	3.406+0	1.000+0	9.091-2
1.10+0	2.851+0	1.000+0	1.010-1
1.20+0	2.386+0	1.000+0	1.111-1
1.30+0	1.997+0	1.000+0	1.212-1
1.40+0	1.671+0	1.000+0	1.313-1
1.50+0	1.399+0	1.000+0	1.414-1
2.00+0	8.139-1	1.000+0	1.919-1
3.00+0	2.736-1	1.000+0	2.929-1
4.00+0	9.200-2	1.000+0	3.939-1
5.00+0	3.093-2	1.000+0	4.949-1
1.00+1	1.329-4	1.000+0	1.000+0

Total Integrated Source Strength:

$$\text{Unbiased:} \quad \int_{0.1}^{10.0} N(E)dE = 7.702 \quad \text{(photons/fission)}$$

$$\text{Biased:} \quad \int_{0.1}^{10.0} K(E)dE = 9.900 \quad \text{(photons/fission)}$$

5.3 Emission Angle Calculations

The direction of emission for each source particle is defined in terms of the direction cosines, $\cos\alpha_s$, $\cos\beta_s$, and $\cos\gamma_s$, which are measured with respect to the X, Y, and Z axis, respectively. If biasing is not used, the direction of emission from the source is sampled from a true isotropic distribution. The cosine of the angle between a line through the source parallel with the Z axis and the direction of emission is defined as the polar angle of emission and is computed with the expression

$$\cos\theta = 1 - 2 \cdot RN1$$

where RN1 is a random number sampled from a uniform distribution between 0 and 1. The azimuthal direction of the emitted particle is given by the expression

$$\phi = 2\pi \cdot RN2$$

where RN2 is a second random number sampled from the uniform distribution between 0 and 1. The direction cosines for the emitted direction are then computed with the formulae

$$\cos\gamma_s = \cos\theta$$

$$\cos\alpha_s = \sin\theta\cos\phi$$

$$\cos\beta_s = \sin\theta\sin\phi$$

If biasing is to be used, the polar angle of emission may be selected by one of two methods: 1) If the input parameter ABP is assigned a value between 0 and -1, a biased distribution is employed which allows the program to select a given fraction of the emitted particles to have polar angles that are between 0° and a given polar angle, θ_{max}; 2) If ABP is assigned a value greater than zero, the polar angle is selected from an exponential distribution. Particle weights are adjusted to

correct for the use of a biased polar angle distribution.

Initially, the program checks to see if ABP is negative. If it is, a random number, RN, between 0 and 1 is generated and the following check is made

$$RN < |ABP| \quad .$$

If RN is less than $|ABP|$, the cosine of a polar angle between 0° and θ_{max} is selected using the equation

$$\cos\theta = 1.0 - RN' \cdot (1.0 - \cos\theta_{max})$$

where

θ is the polar angle measured with respect to the +Z-axis,
RN' is a new random number between 0 and 1, and
θ_{max} is an input parameter, TM, which specifies the half-angle of the cone within which a specified fraction, $|ABP|$, of the source particles are to be emitted.

The weight adjustment of each particle is given by the equation

$$WEIGHTA = \frac{1.0 - \cos\theta_{max}}{-2 \cdot ABP}$$

If RN is equal to or greater than $|ABP|$, the cosine of a polar angle between θ_{max} and 180 degrees is selected using the equation

$$\cos\theta = \theta_{max} - RN' \cdot (\cos\theta_{max} + 1.0)$$

and the weight adjustment of the particle is given by the equation

$$WEIGHTA = \frac{\cos\theta_{max} + 1.0}{2 \cdot (1.0 + ABP)}$$

As stated above, if ABP is input into SKYSHINE-II as a positive value greater than zero, the polar angle of emission measured with respect to the Z axis is selected from an exponential distribution. The polar angle is selected using the equation

$$\theta = - \frac{\ell n(1.0 - RN') \cdot (1.0 - e^{-\pi \cdot ABP})}{ABP}$$

The weight adjustment of the source particle is given by the equation

$$WEIGHTA = \frac{\sin\theta \cdot (1.0 - e^{-\pi \cdot ABP})}{2 \cdot ABP \cdot e^{-\theta \cdot ABP}} \quad .$$

For a given value of ABP, there is a half-angle, $\theta_{1/2}$, which defines a cone about the zenith within which one-half of the source particles are emitted. Typical values of ABP and the respective half-angles are as follows:

ABP	$\theta_{1/2}$ (degrees)
0.1	82.96
0.5	57.78
1.0	37.29
2.0	19.80

These values of ABP can be used as a guide for selecting values of ABP (positive only) for a specific source-structure configuration.

One additional biasing option is available in SKYSHINE-II. If desired, the base from which the polar angle, θ, is measured may be specified as something other than the +Z axis. A new base is used if the parameter, AXIS, has a value greater than zero. The new base is defined as the direction vector, $\vec{R}$, between the source point and the

spatialnt XP, YP, ZP, as shown in Fig. 3. If the base for measu ing thear angle θ is assumed to be $\vec{R}$, the direction cosines of tl particleection vector, $\vec{P}$, with respect to the base coordinate sys tem (i.e(, Y, Z axis) are calculated using spherical triangle relationship?ig. 3). The direction cosines are given by the equations

$$\cos\gamma_s = \cos\theta \cdot \cos\psi_z + \sin\theta\cos\rho \cdot \sin\psi_z$$

$$\cos\alpha_s = \cos\phi_n \cdot \sin\gamma_s$$

$$\cos\beta_s = \sin\phi_n \cdot \sin\gamma_s$$

where

$$\cos\phi_n = \cos(\phi - \Delta\phi) \text{ and}$$

$$\sin\phi_n = \sin(\phi - \Delta\phi) \quad .$$

The angle ϕ is the angle between the X axis and the projection into the (X, Y) plane of the vector $\vec{R}$. The sine and cosine of ϕ are given by

$$\cos\phi = \frac{\cos\psi_x}{\sin\psi_z}$$

$$\sin\phi = \frac{\cos\psi_y}{\sin\psi_z}$$

where

$$\cos\psi_x = \frac{XP - XS}{DIST}$$

$$\cos\psi_y = \frac{YP - YS}{DIST}$$

$$\cos\psi_z = \frac{ZP - ZS}{DIST}$$

$$\sin\psi_z = \sqrt{1 - \cos^2\psi_z}$$

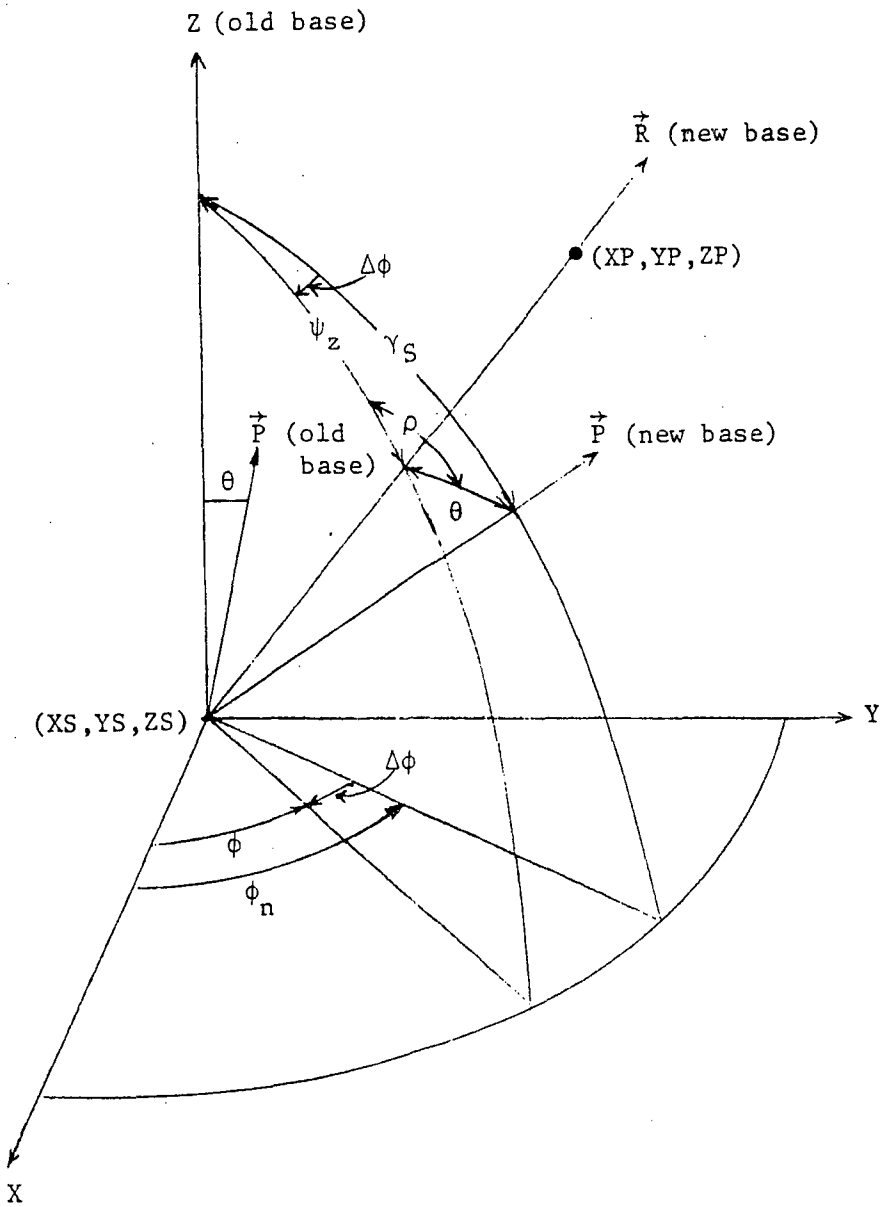

Fig. 3. Geometry for Polar Angle Rotation

and

$$DIST = \sqrt{(XP - XS)^2 + (YP - YS)^2 + (ZP - ZS)^2}$$

$\Delta\phi$ is the angle between the projections into the (X,Y) plane of the sampled particle's direction, $\vec{P}$, and the vector, $\vec{R}$. The sine and cosine of the angle $\Delta\phi$ are given by the equations

$$\sin\Delta\phi = \sin\theta\sin\rho/\sin\gamma_s$$

$$\cos\Delta\phi = \frac{\cos\theta - \cos\gamma_s \cdot \cos\psi_z}{\sin\gamma_s \cdot \sin\psi_z}$$

where

$$\sin\gamma_s = \sqrt{1 - \cos^2\gamma_s} \quad .$$

Using a new base for measuring θ represents only a simple rotation of axis and no adjustment to the particle weight is required. Using a new base for measuring the polar angle of emission with one of the above described options for selecting the polar angle of emission allows one to bias the selection of source particle directions to those directions defined by an opening in the structure roof or one of the structure walls that is not symmetrical about the Z axis.

5.4 Statistical Weight Calculations

It should be noted that the SKYSHINE-II program utilizes the Monte Carlo method to evaluate the integral expression given in subsection 5.1. As previously stated, the number of particles whose energy of emission will be selected from the defined cpd is indicated by the input parameter NHISTE. For each of these NHISTE source particles' energy histories, the input parameter NHISTA provides the number of histories to be sampled from the selected angular emission distribution. Therefore, a total of NHISTA • NHISTE histories will be run for each point source defined.

A relative weight for each point source is specified by the input parameter WATE. If only one point source is defined then the value of WATE should be set equal to 1. For problems in which multiple point sources are defined, only one emission spectrum may be specified by the user. However, the total strength may vary from point to point, as given by the integral

$$\int_{E_\ell}^{E_u} N(E)\, dE$$

specified for each source point. Note that in subsection 5.2 the input data required for definition of the emission spectrum included the integral parameter

$$\text{SOURN} = \int_{E_\ell}^{E} N(E)\, dE \; .$$

This quantity is defined only once for a given spectrum. If multiple source points are defined a relative weight parameter, WATE, is used to adjust for differences in the total source strength for each source point. This parameter is given by the ratio

$$\text{WATE}_I = \frac{\left\{ \int_{E_\ell}^{E_u} N(E)\, dE \right\}_I}{\left\{ \int_{E_\ell}^{E_u} N(E)\, dE \right\}_1}$$

where the denominator is equivalent to the parameter, SOURN, defined in subsection 5.2. The index I corresponds to the Ith point source. If

only one source point is specified then $WATE_1$ is equal to 1. In fact, if the spectral quantities given in subsection 5.2, SOURN in particular, are defined with respect to the first source point for cases of multiple source points, then $WATE_1$ will be equal to 1.

Once an emission energy has been selected for a particular history, the weight of the particle is modified by the total integrated strength of the spectrum as described in subsection 5.2

$$WATE' = WATE \cdot WEIGHT$$

where

$$WEIGHT = SOURN = \int_{E_\ell}^{E_u} N(E)\ dE$$

for a normal (unbiased) spectral distribution and

$$WEIGHT = \Big(N(E)/K(E)\Big) \cdot \int_{E_\ell}^{E_u} K(E)\ dE$$

for a biased distribution. The parameter WATE' is the new weight of the particle history. If the polar angle of emission is sampled from a biased distribution, the particle weight is further modified by the appropriate weighting function defined in subsection 5.3

$$WATE'' = WATE' \cdot WEIGHTA$$

where WATE'' now represents the new particle weight.

Each estimate of the air-scattered dose rate is then calculated with the formula

$$EST = WATE'' \cdot ASD\ (\theta,\ X,\ E) \cdot ATTEN$$

where WATE" is the final particle weight as described above, ASD is the air-scattered dose rate as described in subsection 5.1, and ATTEN is the self attenuation factor input for the point source of interest. Note that for a SKYSHINE-II problem in which several source points are defined, the initial weight, WATE, and the self-attenuation factor, ATTEN, are specified for each source point and hence may be varied from point to point in order to account for variations in the source strength and the attenuation effects of the containment equipment within the defined structure of interest.

5.5 Geometry Calculations

The geometry used in SKYSHINE-II is described in detail in Section II. The selection of the direction of emission of each source particle is described in subsection 5.3. Knowing the description of the SKYSHINE-II geometry and the direction of emission, calculations may be made to determine 1) which of the six surfaces is intercepted by the particle, and 2) which of the nine possible sections of the intercepted surface contains the point of interception. The SKYSHINE-II geometry calculations are described below.

In order to determine which of the six surfaces is intercepted by the direction sampled for the emitted particle, the distances to each of the six surfaces are computed with the formulae

$$D(1) = (X1 - X_s)/\cos\alpha_s$$

$$D(2) = (X2 - X_s)/\cos\alpha_s$$

$$D(3) = (Y1 - Y_s)/\cos\beta_s$$

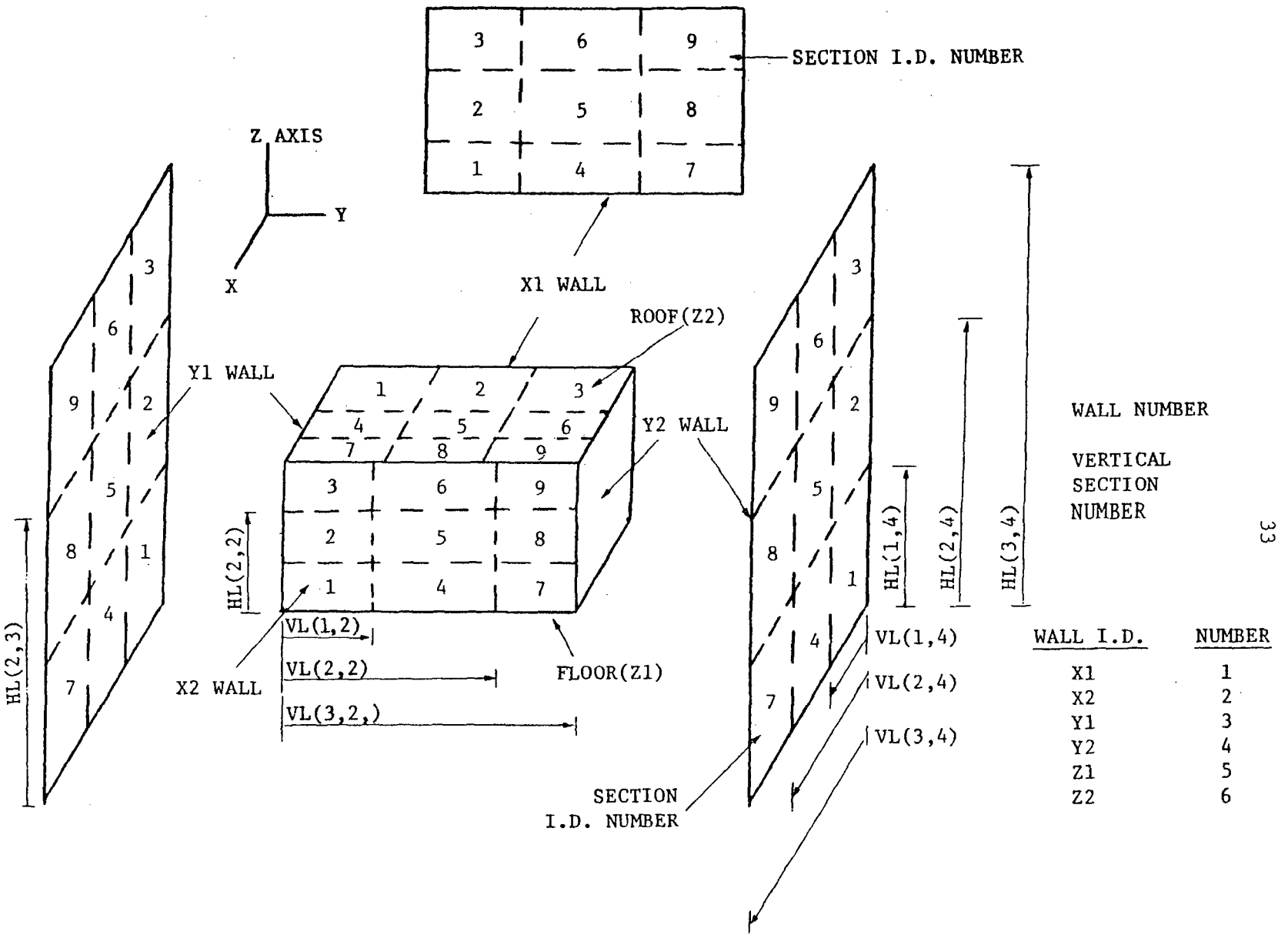

WALL I.D.	NUMBER
X1	1
X2	2
Y1	3
Y2	4
Z1	5
Z2	6

Fig. 4. Section Bounds for each Structure Surface

$$D(4) = (Y2 - Y_s)/\cos\beta_s$$

$$D(5) = (Z1 - Z_s)/\cos\gamma_s$$

$$D(6) = (Z2 - Z_s)/\cos\gamma_s$$

where X1,X2,Y1,Y2,Z1,Z2 are the coordinates of the structure surfaces (wall, roof, and floor) as defined in Section II, X_s, Y_s, Z_s are the coordinates of the source point, and $\cos\alpha_s, \cos\beta_s, \cos\gamma_s$ are the direction cosines of the direction of emission of the source particle.

The smallest positive value of D(NB) identifies the surface, NB, intercepted by the emitted particle. Knowing the surface, one may calculate the section of the surface intercepted. The sections of the surface are defined in terms of the distances VL(I, NB) and HL(I, NB), which are defined for each surface as shown in Fig. 4. These distances define the bounds of each section. From the bounds of each section and the coordinates of the point of intersection with the surface, the section intercepted by the particle may be determined. The coordinates of the point of intersection are given by the equations:

$$XP = X_s + D(NB) \cdot \cos\alpha_s$$

$$YP = Y_s + D(NB) \cdot \cos\beta_s$$

$$ZP = Z_s + D(NB) \cdot \cos\gamma_s$$

where D(NB) is the distance from the source point to the surface, NB. Depending on NB, the following conditions are set:

If NB = 1,2 (interception with an X1 or X2 wall)

HI = ZP - Z1

WD = YP - Y1

If NB = 3,4 (interception with a Y1 or Y2 wall)

$$HI = ZP - Z1$$

$$WD = XP - X1$$

If NB = 5,6 (interception with the floor or roof)

$$HI = YP - Y1$$

$$WD = XP - X1$$

The section number between one and nine (Fig. 4) of the section intercepted by the emitted particle is given by the equation

$$IJ = I + (J - 1) \cdot MAX$$

where I and J are defined by the smallest value for which

$$HL(I, NB) \geq HI$$

$$VL(J, NB) \geq WD$$

and MAX is the maximum number of values of HL(I, NB) used to define surface NB. The number of the material-thickness combination, NT, used to define section IJ of surface NB is given by the equation

$$NT = MAH(IJ,NB)$$

where MAH is an input array describing which of the fifteen possible material-thickness combinations are used to describe each section-surface combination.

If NB is equal to one through four, the emitted particle is assumed to intersect one of the four walls. If NB is equal to five or six, the particle is assumed to intersect the floor or roof of the structure, respectively. If the particle intersects a wall or the roof, and the thickness of the intercepted section is zero or MAH(IJ,NB) = 0 for section IJ, the emitted radiation is assumed to pass through a void section.

The air-scattered dose rate is estimated for the radiation which passes through a structure opening. If the section intersected contains a non-zero thickness material, then no estimates are made and the history is terminated.

The SKYSHINE-II program records the number of emitted particles that are incident upon each section of each of the four walls, the floor and roof of the structure. The total number of particles incident upon any section of the structure divided by the total number of particles emitted and multiplied by 4π should approximate the solid angle that the section subtends from the source position.

5.6. Calculation of Percent Deviations

The Monte Carlo method employed in the SKYSHINE-II program is a statistical method in which the scattered dose rate at a receiver is obtained by averaging estimates computed for each of the individual histories. In order to provide an indication of the statistical accuracy of the air-scattered dose rate computed with the Monte Carlo method, the SKYSHINE-II program computes the percent deviation of the scattered dose rate. The percent deviation is given by the formulae

$$P = 100\ \sigma_h/\overline{X}$$

where σ_h is the standard deviation of the mean value, $\overline{X}$, of the scattered dose rate computed with the Monte Carlo method.

The standard deviation, σ_h, is computed in SKYSHINE-II in the following manner: the total number of histories, h, run for a given SKYSHINE-II problem is divided into 10 groups so that the size of each group is

$$m = h/10$$

Note that h is equal to NHISTA · NHISTE. The average values of the

scattered dose rate for each group is computed with the expression

$$X_i = \frac{1}{m} \sum_{j=1}^{m} E_j$$

where E_j are the estimates of the dose rate for the individual histories within the group. Next, the standard deviation of the group mean values is computed with the expression

$$\sigma_m = \sqrt{\frac{1}{n-1} \sum_{i=1}^{n} (X_i - \overline{X})^2}$$

where $\overline{X}$ is the average of the group mean values,

$$\overline{X} = \frac{1}{n} \sum_{i=1}^{n} X_i$$

The standard deviation, σ_m, of the group mean values depends upon the size of the groups. If the standard deviation for groups of size m_1 are known, then the standard deviation for groups of size m_2 may be estimated with the expression

$$\sigma_{m_2} = \sigma_{m_1} (m_1/m_2)^{1/2}$$

Therefore, the standard deviation for the average value of all the groups, $\overline{X}$, is given by

$$\sigma_h = \sigma_m \sqrt{m/h}$$

or

$$\sigma_h = \sigma_m / \sqrt{n}$$

where $n = h/m$ is the number of groups.

The interpretation of the standard deviation, σ_h, computed in the SKYSHINE-II program is as follows: If the SKYSHINE-II problem were rerun with a different random number sequence, the average value of a dose rate component computed with the second run would be expected to lie within $\pm \sigma_h$ of the average value of the dose rate component computed with the first run 66 2/3% of the time. Although the standard deviation, σ_h, computed in SKYSHINE-II is not highly dependent upon the manner in which the histories are grouped, it would be advisable to group the histories into at least 10 or more groups. To increase the number of groups, one must increase the value of NGRP in the block data routine CONSTS.

The SKYSHINE-II program accumulates the dose rate from individual point sources located at different positions within the structure and thus provides an estimate of the air-scattered dose rate for a distributed source. The scattered dose rate, indicative of the distributed source, is the basic output of the program. Percent deviations for each point source are computed as discussed above, then the percent deviation for the accumulated dose rate is computed in the following manner: the variances, $\sigma_{h_i}^2$, of the dose rate for each source point are summed,

$$\sigma_{h_s}^2 = \sigma_{h_1}^2 + \sigma_{h_2}^2 + \ldots \sigma_{h_\ell}^2$$

over ℓ, the number of point sources, to give the variance of the accumulated dose rate corresponding to the distributed source. The percent deviation of the distributed source is given by

$$P_s = 100\ \sigma_{h_s} / \overline{X}_s$$

where $\overline{X}_s$ is the mean value for the total air-scattered dose rate computed from all source points.

VI. INPUT DATA REQUIREMENTS

The SKYSHINE-II program requires input data from two sources. A standard problem deck which contains the data necessary for defining the structure geometry, source/receiver locations, energy emission data, and a variety of program options, is read from logical unit five (which is usually assigned to the card reader). The order and format for this input data deck, along with program restrictions and requirements, is given in Table IV. An additional data deck is read from logical unit eight. This deck corresponds to the data base file which contains the curve fit coefficients for the radiation source of interest. Such a file exists for each of the three allowable source types, i. e., neutrons, primary gamma rays, and secondary gamma rays. Note, the radiation source type for a given SKYSHINE-II problem is defined by the file which is assigned to logical unit eight. Therefore, if a neutron problem is to be executed by the SKYSHINE-II program, then the file which contains the neutron coefficients must be assigned to logical unit eight. Information pertaining to the utilization of these files and the SKYSHINE-II program with respect to the Brookhaven National Laboratory - Central Scientific Computing Facility is presented in Appendix A.

The SKYSHINE program is designed to run a series of problems stacked back-to-back when the value of NEXT is set equal to 1 in all but the last problem deck. All input data is required for the first problem deck. However, depending on the value input for certain parameters in the first or the previous problem, only part of the stacked problem deck may be required. The parameter IPREC is used to indicate that the detector locations are the same as in the previous problem and need not be repeated. The parameter IPBLDG is used to indicate that a new structure description will or will not be required in the successive problem deck.

The option ISUM is used to indicate whether the accumulative results from consecutive problems should be printed. When ISUM is equal to 1 the accumulated results of all problems run or all problems run since the previous problem with ISUM equal to 1 will be printed. The

TABLE IV. INPUT PROBLEM DATA FORMATS

CARD	FORMAT	FIELD	SYMBOL	DESCRIPTION
A	20A4	1-80	COMENT	Title card for geometry input
B	E10.0	1-10	ARHO	Site air density (gm/cm^3)
	(For stacked problems (i.e., NEXT = 1 in previous problem), start additional problem deck here if IPBLDG = 1 in the previous problem deck. If IPBLDG = 0, start at Card Q).			
C	I10	1-10	NWT	Number of slab thickness composition combinations (NWT≤15)
D	8E10.0	1-80	WT(I)	Thickness of slab combination I in feet (I=1,NWT)
E	8I10	1-80	MAT(I)	Material composition slab combination I: MAT(I) = 1; concrete MAT(I) = 2; iron (I=1,NWT)
	(To define each of the four walls of the structure, four sets of Cards F, G, and H must be input (i.e., one set for each wall). The walls are defined in the following order: X1, X2, Y1, Y2. See Section II for a complete description of the structure).			
F	I10 3E10.0	1-10	LH	Number of vertical slab sections used to describe the wall (LH≤3)
		11-40	HL(J,N)	Distance from floor to top of vertical slab section J (Fig. 4) (feet) (J=1,LH)
G	I10 3E10.0	1-10	LV	Number of horizontal slab sections used to describe the wall (LV ≤ 3)
		11-40	VL(K,N)	Distance from X1 (or Y1) wall to left (or right) side of section K (feet) (K=1,LV)
H	8I10	1-80	MAH(L,N)	Slab index number I (see WT(I) and MAT(I)) associated with wall section L (Fig. 3). Wall sections are defined by the input parameters HL(J,N) and VL(K,N). (L=1,LH·LV)

TABLE IV. (Continued)

CARD	FORMAT	FIELD	SYMBOL	DESCRIPTION
	(Cards I, J, K are used to describe the floor of the structure. The floor is assumed to be one material of infinite thickness.)			
I	I10	1-10	LH	= 1
	E10.0	11-20	HL(1,5)	= VL(LV,1) for X1 wall
J	I10	1-10	LV	= 1
	E10.0	11-20	VL(1,5)	= VL(LV,3) for Y1 wall
K	I10	1-10	MAH(1,5)	Slab index number I. Used to define material (iron or concrete) of floor only. Floor thickness assumed is arbitrary.
	(Cards L, M, N are used to describe the roof.)			
L	I10 3E10.0	1-10	LH	Number of slab sections in X direction used to describe roof. ($LH \leq 3$)
		11-40	HL(J,6)	Distance from Y1 wall to far side of slab section in Y direction. (feet) (K=1,LV)
M	I10 3E10.0	1-10	LV	Number of slab sections in Y direction used to describe roof. ($LV \leq 3$)
		11-40	VL(K,6)	Distance from X1 wall to far side of slab sections in X direction. (feet) (J=1,LH)
N	8I10	1-80	MAH(L,6)	Slab index number I associated with roof section L (see Fig. 3). (L=1,LH·LV)
O	6E10.0	1-60	C(I)	Coordinates of the X, Y, Z planes of the structure. Input in the order X1, X2, Y1, Y2, Z1 (floor) and Z2 (roof). (feet) (I=1,6)
P	I10	1-10	IYP	Initial random number base. (If IYP = 0, the program sets the base to 81765937)

TABLE IV. (Continued)

CARD	FORMAT	FIELD	SYMBOL	DESCRIPTION
	(For stacked problems (i.e., NEXT = 1 in previous problem), start additional problem decks here if IPBLDG = 0 in the previous problem).			
Q	20A4	1-80	COMENT	Title card for problem.
R	7I10	1-10	NHISTA	Number of angular emission histories per energy emission history per source point
		11-20	NHISTE	Number of energy emission histories per source point (NHISTA·NHISTE indicates the total number of histories per source point and must be a multiple of 10)
		21-30	NEXT	STACKED PROBLEM OPTION: = 0, last or only problem deck = 1, another problem deck is to follow
		31-40	ISUM	PRINT OPTION: = 0, for stacked problems, the dose rates from this problem only are printed and then dose rates are accumulated with dose rates from previous problems for which ISUM = 0. = 1, dose rates from this problem are printed and then the accumulated doses from this problem and previous problems with ISUM = 0 are also printed. If ISUM = 1, all dose rate arrays are set to zero before the next problem.
		41-50	IREFLC	REFLECTION CALCULATION OPTION: = 0, include reflection calculations = 1, omit reflection calculations (not used in this version of SKYSHINE-II)
		51-60	IPREC	DETECTOR OPTION: = 0, for first problem deck and stacked problems for which new detector locations are to be input. = 1, use detector locations from previous problem.

TABLE IV. (Continued)

CARD	FORMAT	FIELD	SYMBOL	DESCRIPTION
		61-70	IPBLDG	GEOMETRY OPTION FOR STACKED PROBLEMS: = 0, structure geometry from this problem will be used in the next problem. The successive problem deck will start with Card Q. = 1, a new structure geometry will be required for the next problem deck. The successive problem deck will start with Card C.
	(Cards S and T must always be input in the first problem deck. For stacked problems, Cards S and T are omitted if IPREC = 1. In this case, detector locations for the first or preceding problem will be used for this problem. If IPREC = 0, Cards S and T must be input.)			
S	I10	1-10	NDET	Number of detector locations. (NDET $\leq$ 5)
	(Card T must be input for each of the NDET detector locations.)			
T	3E10.0	1-10	XD(I)	X coordinate of the Ith detector. (feet)
		11-20	YD(I)	Y coordinate of the Ith detector. (feet)
		21-30	ZD(I)	Z coordinate of the Ith detector. (feet)
U	2I10	1-10	NEG	Number of energies at which the normalized cumulative probability distribution for energy emission is to be defined. (NEG$\leq$20)
		11-20	IBIAS	SOURCE EMISSION ENERGY BIASING OPTION: = 0, energy emission distribution is unbiased = 1, energy emission distribution is biased
V	8E10.0	1-80	EG(I)	Energy at which the spectral data is defined. Must be in ascending order i.e., EG(I) < EG(I+1). (MeV)

TABLE IV. (Continued)

CARD	FORMAT	FIELD	SYMBOL	DESCRIPTION
W	8E10.0	1-80	CPDEG(I)	Normalized cumulative probability distribution for energy emission defined at the energy EG(I). (I=1,NEG)
	(Cards X and Y are omitted if IBIAS = 0.)			
X	8E10.0	1-80	SPECN(I)	Unbiased (true) differential energy distribution defined at the energy EG(I). (particles-MeV^{-1}-sec^{-1})(I=1,NEG)
Y	8E10.0	1-80	SPECK(I)	Biased differential energy distribution defined at the energy EG(I). (particles-MeV^{-1}-sec^{-1}) (I=1,NEG)
Z	2E10.0	1-10	SOURN	Unbiased total integrated energy distribution. (particles-sec^{-1})
		11-20	SOURK	Biased total integrated energy distribution. (particles-sec^{-1}) (If IBIAS = 0, SOURK is omitted)
AA	I10	1-10	NUSOR	Number of source points. (NUSOR$\leq$100)
	(Cards BB and CC must be input for each of the NUSOR source points.)			
BB	5E10.0	1-10	WATE	Relative weight of point source, see Section V.
		11-20	ATTEN	Multiplication or attenuation factor for the point source. Normally, ATTEN = 1.0.
		21-30	ABP	SOURCE EMISSION ANGLE BIASING OPTION: = 0.0, no effect (isotropic distribution assumed). $-1.0 \leq ABP < 0.0$, $\lvert ABP \rvert$ is the fraction of the gammas that are emitted within the angle interval between the zenith and the angle defined by the input parameter TM. (see subsection 5.3)

TABLE IV. (Continued)

CARD	FORMAT	FIELD	SYMBOL	DESCRIPTION
				0 < ABP < 1, ABP is the biasing factor for the exponential biasing distribution as defined in subsection 5.3.
		31-40	AXIS	DIRECTION BIASING OPTION: = 0.0, the selected polar angle is measured with respect to the +Z axis. = 1.0, the selected polar angle is measured with respect to the direction vector between the source point (XS,YS,ZS) and a specified point (XP,YP,ZP).
		41-50	TM	If ABP $\geq$ 0, TM is omitted. If ABP $<$ 0, TM defines the half-angle of a cone within which the fraction, |ABP|, of the source particles are emitted. The axis of the cone is defined by the parameter, AXIS.
CC	6E10.0	1-10	XS	X coordinate of source point. (feet)
		11-20	YS	Y coordinate of source point. (feet)
		21-30	ZS	Z coordinate of source point. (feet)
	(Omit remainder of card if AXIS = 0.0)			
		31-40	XP	X coordinate of biasing point. (feet)
		41-50	YP	Y coordinate of biasing point. (feet)
		51-60	ZP	Z coordinate of biasing point. (feet)
	(If NEXT = 1 and IPBLDG = 1, repeat the problem deck from Card C. If NEXT = 1 and IPBLDG = 0, repeat the problem deck from Card Q.)			

arrays for accumulating results from consecutive problems are zeroed out immediately after the arrays are printed out. The normal use of the ISUM option is for a series of problems which have the same structure geometry and receiver positions but different source components (i.e., high pressure turbine, reheater, etc.). ISUM would be set to 0 for all but the last problem deck which would have ISUM = 1. The accumulated results would then be the dose rate from all source components. The intermediate results from each problem would give the dose rate from each component.

The important and not so obvious restrictions and limitations of the SKYSHINE-II program are listed below:

1. The only radiation component calculated by this version of the SKYSHINE-II program is the air-scattered dose rate which results from radiation emanating through structure openings.
2. An entire wall or roof may be designated as a void, or only a portion of a wall or roof may be designated as a void.
3. There is a limit of fifteen wall thickness-composition combinations allowed per problem.
4. There is a limit of one hundred source points allowed per problem.
5. Only one differential energy distribution is allowed per problem.
6. Only one radiation source type is allowed. You may not change source types when executing stacked cases.
7. There is a limit of twenty energy values at which the spectral data may be defined per problem.
8. The source description is limited to a point isotropic source of either neutrons or primary gamma rays. When using a point isotropic neutron source, it is possible to compute either the neutron or secondary gamma-ray dose rate at each receiver location.

9. There is no limit on the number of stacked problems allowed.

10. The structure must be complete. All void sections of the walls, as well as the material sections, must be defined such that the height of all four walls is equal to the distance from the floor to roof (i.e., Z2 - Z1). The floor and roof must be defined from wall to wall. To insure that the structure is complete, the following conditions should be true (see Table IV):

    a. For the X1 and X2 wall

       VL(LV,1) = VL(LV,2) = Y2 - Y1

       HL(LH,1) = HL(LH,2) = Z2 - Z1

    b. For the Y1 and Y2 wall

       VL(LV,3) = VL(LV,4) = X2 - X1

       HL(LH,3) = HL(LH,4) = Z2 - Z1

    c. For the roof

       HL(LH,6) = Y2 - Y1

       VL(LV,6) = X2 - X1

    d. For the floor

       HL(1,5) = Y2 - Y1

       VL(1,5) = X2 - X1

VII. SAMPLE PROBLEMS

A series of sample problems have been run with the SKYSHINE-II program in an effort to verify the procedure. Several of these problems are discussed in this section of the report. In addition, a sample listing of the input and output formats is provided in order to aid in the comprehension of the mechanics of the program.

Shown in Figs. 5 and 6, is a comparison of results obtained from the SKYSHINE-II program with those obtained from the original Monte Carlo programs (i.e., ZAPN and ZAPGAM) which produced the basic data from which the neutron and secondary gamma-ray transmission coefficients were derived. The ZAPN and ZAPGAM results are for a point isotropic source embedded within an infinite homogeneous medium of air characterized by a density of 1.225×10^{-3} (gm/cm^3). In particular, these results indicate the energy desposition as a function of the source-receiver separation distance. Neutron energy deposition results (Fig. 5) are representative of source neutron energies uniformly distributed between 12 and 15 MeV, while those of the secondary gamma rays (Fig. 6) are for source neutron energies between 10 and 12 MeV.

The SKYSHINE-II results were obtained by defining a cubic structure of 20 feet on a side and a height of 20 feet. Each of the four walls was described as a non-void region, while the roof was described entirely as a void region. A point source was located at the center of the structure, at a height slightly below that of the structure walls, 19.999 feet. Receivers were defined at the same altitude as the source point for separation distances from 200 to 1000 meters. The pertinent geometry is shown in Fig. 7. An unbiased uniform emission spectrum was defined between 12 and 15 MeV in the neutron case and between 10 and 12 MeV in the secondary gamma-ray case. Both problems were run for a total integrated source

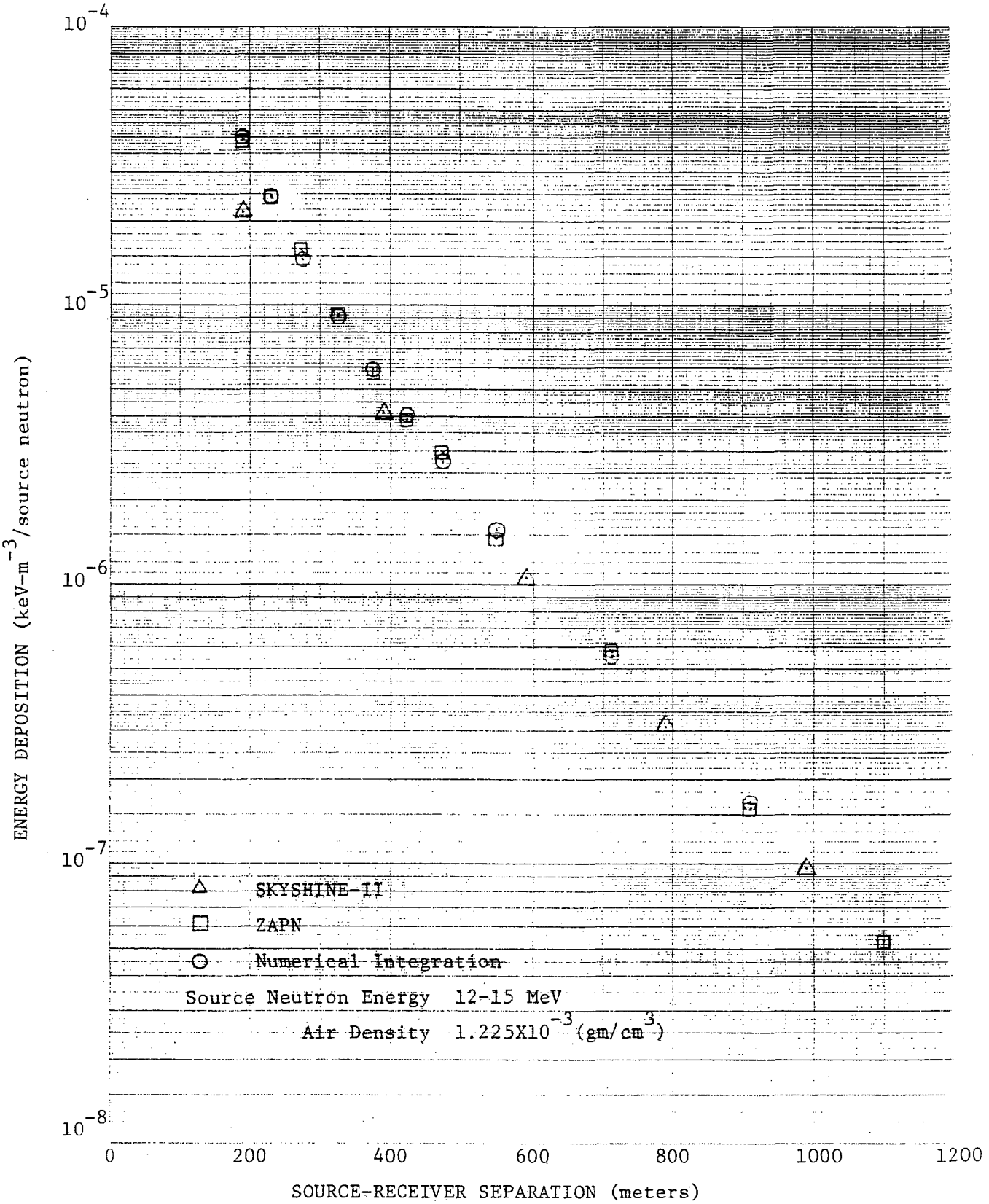

Fig. 5. Comparison of SKYSHINE-II Neutron Calculations for a Point Isotropic Source with Results from the ZAPN Procedure

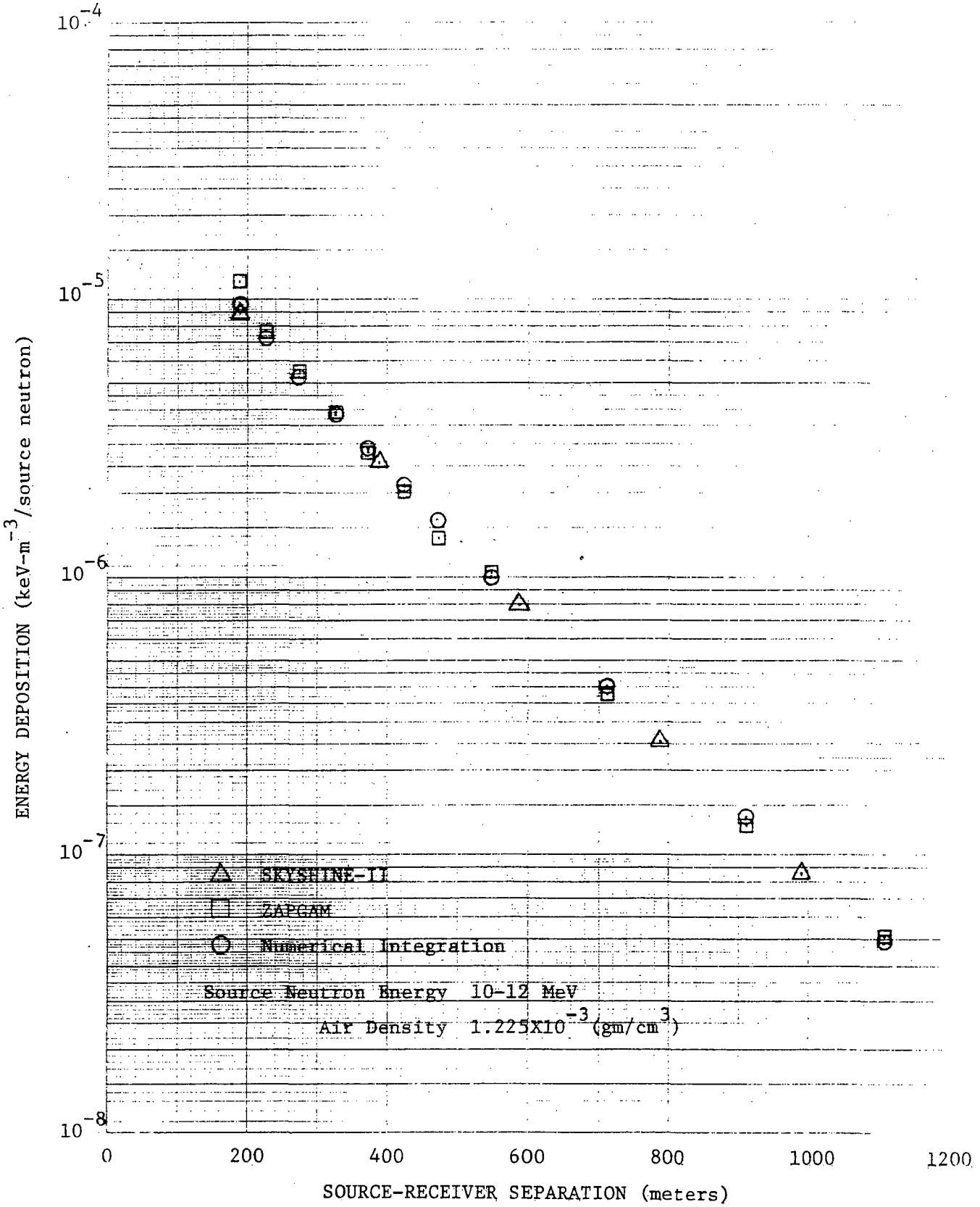

Fig. 6. Comparison of SKYSHINE-II Secondary Gamma-Ray Calculations for a Point Isotropic Source with Results from the ZAPGAM Procedure

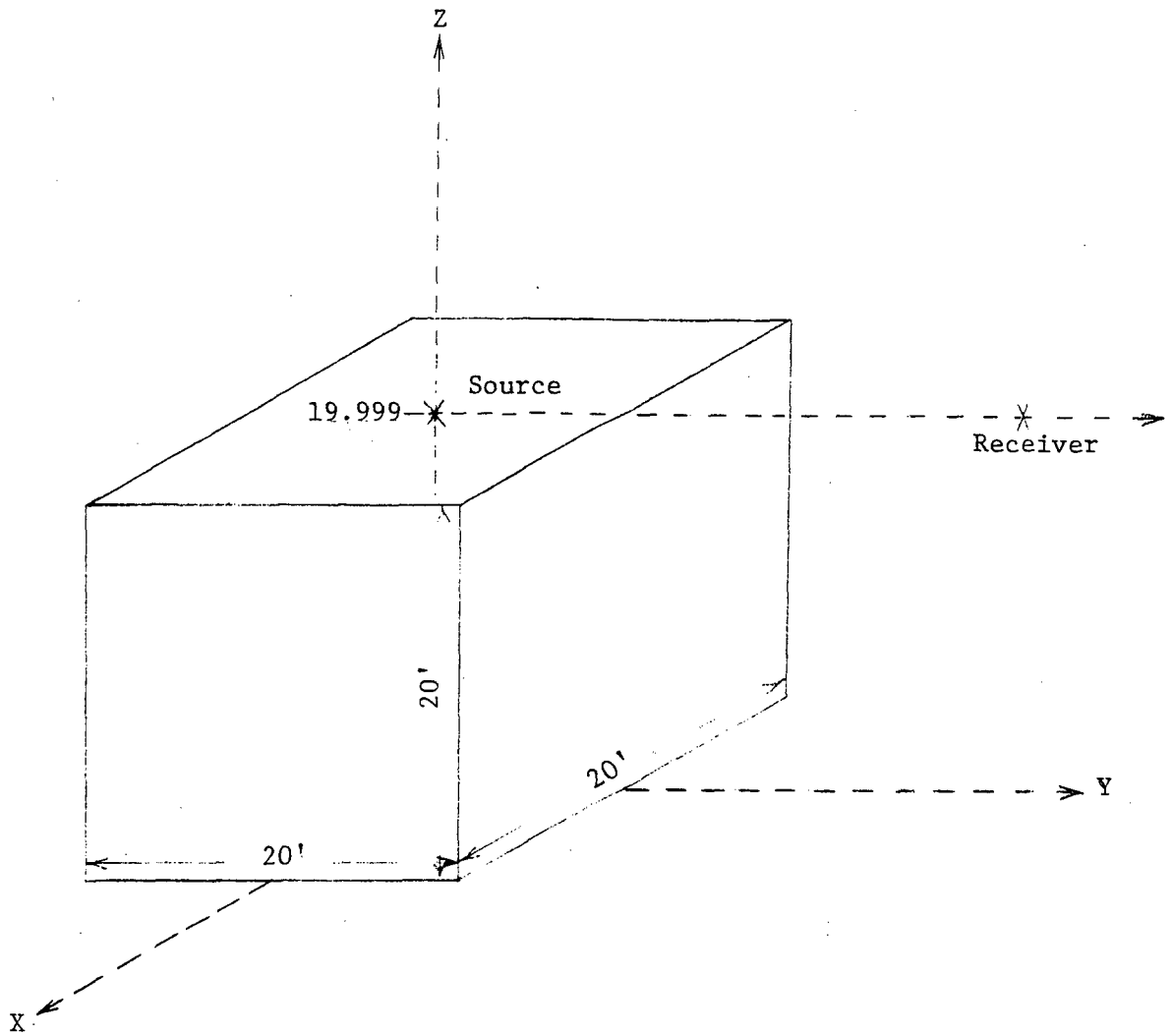

Fig. 7. SKYSHINE-II Geometry for Problem Comparison with the ZAPN and ZAPGAM Procedures

strength of one neutron/sec. In order to improve the statistics of the Monte Carlo procedure, the angular emission of source particles was biased. The input parameter ABP was defined to be -1, and the parameter TM was set equal to $\pi/2$. Therefore, all of the source particles were emitted into the upper 2π hemisphere, defined with respect to the +Z axis. Because of the symmetry of the problem configuration, with respect to the source-receiver axis, a point isotropic source in a homogeneous medium of air may be obtained by multiplying the SKYSHINE-II results by two. A conversion factor was applied to the SKYSHINE-II data in order to convert from mrads/year back to the original units of keV of energy deposited $-m^{-3}-sec^{-1}$/source neutron $-sec^{-1}$.

In addition to the data obtained from the original calculations and those produced by the SKYSHINE-II program, an additional set of data is presented in Figs. 5 and 6. These data represent results obtained by a numerical integration of the transport equation described in subsection 5.1

$$ASD(X) = \int_E \int_{\Omega_o} \frac{N(E)}{4\pi} \; AS(\theta,X,E) \; d\Omega dE$$

where the solid angle extends over the entire 4π space, and the energy over the particular interval of interest. This integration procedure utilized the same set of transmission coefficients as did the SKYSHINE-II results.

As is indicated in Figs. 5 and 6, there is excellent agreement between the original data and the results obtained directly from the curve fit coefficients. SKYSHINE-II results are equally impressive for the secondary gamma-ray problem. Only slight discrepancies are exhibited between the SKYSHINE-II neutron results and those of the original calculations at close separation distances. This discrepancy is indicative of a peculiar characteristic of the neutron data base which must be considered.

The curve fit coefficients for the first polar angle of emission interval, 0 - 1 degrees (Table I), provide the energy deposition due to air-scattered neutrons and direct neutrons. It must be emphasized that this peculiarity is relevant only to the neutron data base and only to the first emission angle interval. (Remember that in this context, the polar angle of emission is defined as that angle subtended by the direction of the emitted radiation and the source-receiver axis.) The importance of the direct radiation is much more prevalent for close separation distances. Therefore, the under prediction by SKYSHINE-II of the energy deposition for close separation distances is the result of insufficient sampling in the 0 - 1 degree polar angle emission interval. (This is equivalent to the polar angle interval defined between 89 and 90 degrees measured with respect to the +Z axis.)

The prompt fission gamma-ray spectra for ^{235}U, previously defined in subsection 5.2, was used in a series of test problems designed to verify the computational methods employed by SKYSHINE-II with respect to the emission energy calculations. These test problems utilized the same structure geometry and angle biasing parameters as were defined with reference to the previous set of problems. In contrast, a set of detector locations were defined along the +Z axis passing through the point source. The first case employed an unbiased spectral distribution as defined by the normalized cumulative probability distribution and total integrated source strength listed in Table II. A second problem made use of the biased spectra described in Table III. The results of these test problems are given in Table V along with results obtained by a numerical integration procedure which used the true unbiased spectra (Table II), along with the primary gamma-ray data base. Included in Table V is the 2/3 confidence interval of the Monte Carlo data. It should be noted that the results obtained numerically lie within the 2/3 confidence interval of the SKYSHINE-II data for all cases.

A final test problem was analyzed with respect to the primary gamma-ray calculations performed by the SKYSHINE-II program. The problem

TABLE V. SCATTERED DOSE RATES FROM THE PROMPT FISSION GAMMA-RAY SPECTRA FOR ^{235}U

SKYSHINE-II Results for Unbiased Emission Spectrum

SOURCE/RECEIVER SEPARATION (feet)	NUMERICAL INTEGRATION (mrad/yr)	SKYSHINE-II (mrad/yr)	SKYSHINE-II (2/3 CONFIDENCE INTERVAL) (mrad/yr)
500	1.276-8	1.232-8	(1.152-8, 1.312-8)
800	4.215-9	3.959-9	(3.634-9, 4.284-9)
1250	1.072-9	1.083-9	(9.704-10, 1.195-9)
1750	2.938-10	3.030-10	(2.643-10, 3.398-10

SKYSHINE-II Results for Biased Emission Spectrum

SOURCE/RECEIVER SEPARATION (feet)	NUMERICAL INTEGRATION (mrad/hr)	SKYSHINE-II (mrad/yr)	SKYSHINE-II (2/3 CONFIDENCE INTERVAL) (mrad/yr)
500	1.276-8	1.199-8	(1.026-8, 1.372-8)
800	4.215-9	4.094-9	(3.550-9, 4.639-9)
1250	1.072-9	1.070-9	(9.465-10, 1.194-9)
1750	2.938-10	3.007-10	(2.698-10, 3.315-10)

configuration was taken to be that of the reference calculation I.2 cited in the First Draft of Proposed American National Standard ANS-6.6.1, entitled "Calculation and Measurement of Direct and Scattered Gamma Radiation from LWR Nuclear Power Plants" (Ref. 12). As stated in Ref. 12, reference calculation I.2 is for an ^{16}N point isotropic source of 6.2 MeV gamma rays of strength 1 photon/sec positioned within a building having 4 foot thick concrete walls on all four sides. The roof of the building is open. Height of the concrete walls is taken to be 62 feet and the inside dimensions of the structure are 100 feet by 150 feet. The source point is located in the center of the building at a height of 60 feet. Receivers are positioned at horizontal ranges between 200 feet and 5000 feet from the normal-to-the-ground surface through the point source and at a height of 3 feet. A graphical representation of the problem configuration is shown in Fig. 8. The air density is taken to be 1.22×10^{-3} (gm/cm^3). All dose rates are reported as absorbed dose rate in units of rads(air)/year, where one year is 8766 hr (24 hr/day X 365.25 days/year). The resulting comparison is shown in Fig. 9, where the data calculated by SKYSHINE-II are seen to be in excellent agreement with the reference calculations provided by the SKREEN, SKYSHINE (original version), G^3 and OGRE programs.

A listing of the input data for the SKYSHINE-II ANS-6.6.1 reference calculation I.2 is given in Table VI. Note that this problem made use of the stacked case option provided in SKYSHINE-II. The first nine pages of output from this problem are listed in Table VII. Page one of the printed output indicates which data base (and correspondingly which radiative source type) was used for the calculation. Remember that the radiative source type is specified by the data base assigned to the problem through the job control cards. This procedure will be discussed in detail in Appendix A. Included on page one of the output is the air density and the base for the random number generator.

The second page of output contains information pertaining to the definition of the emission spectrum. Included on this page is the

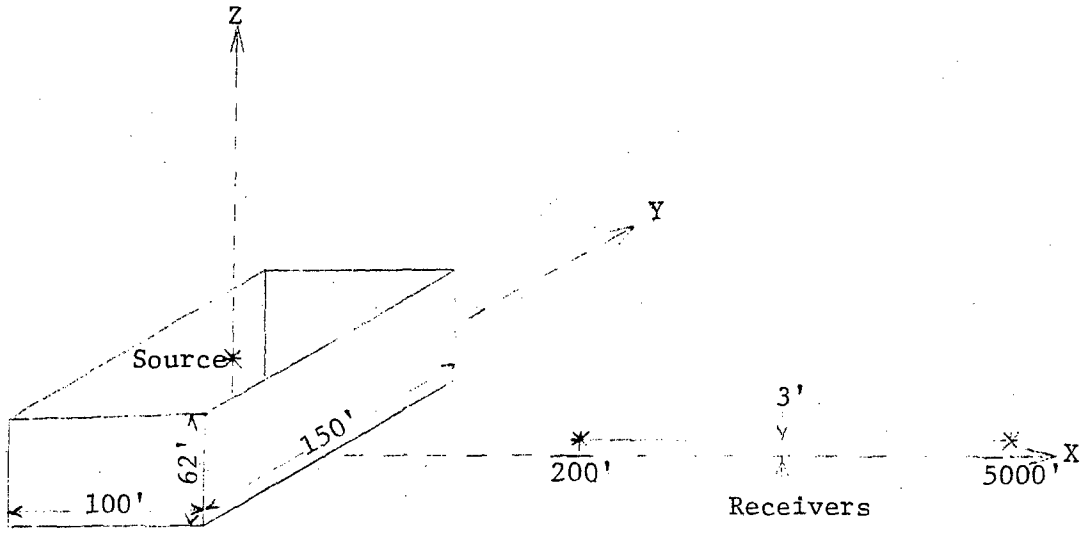

Fig. 8. SKYSHINE-II Geometry for the ANS-6.6.1 Reference Calculation I.2

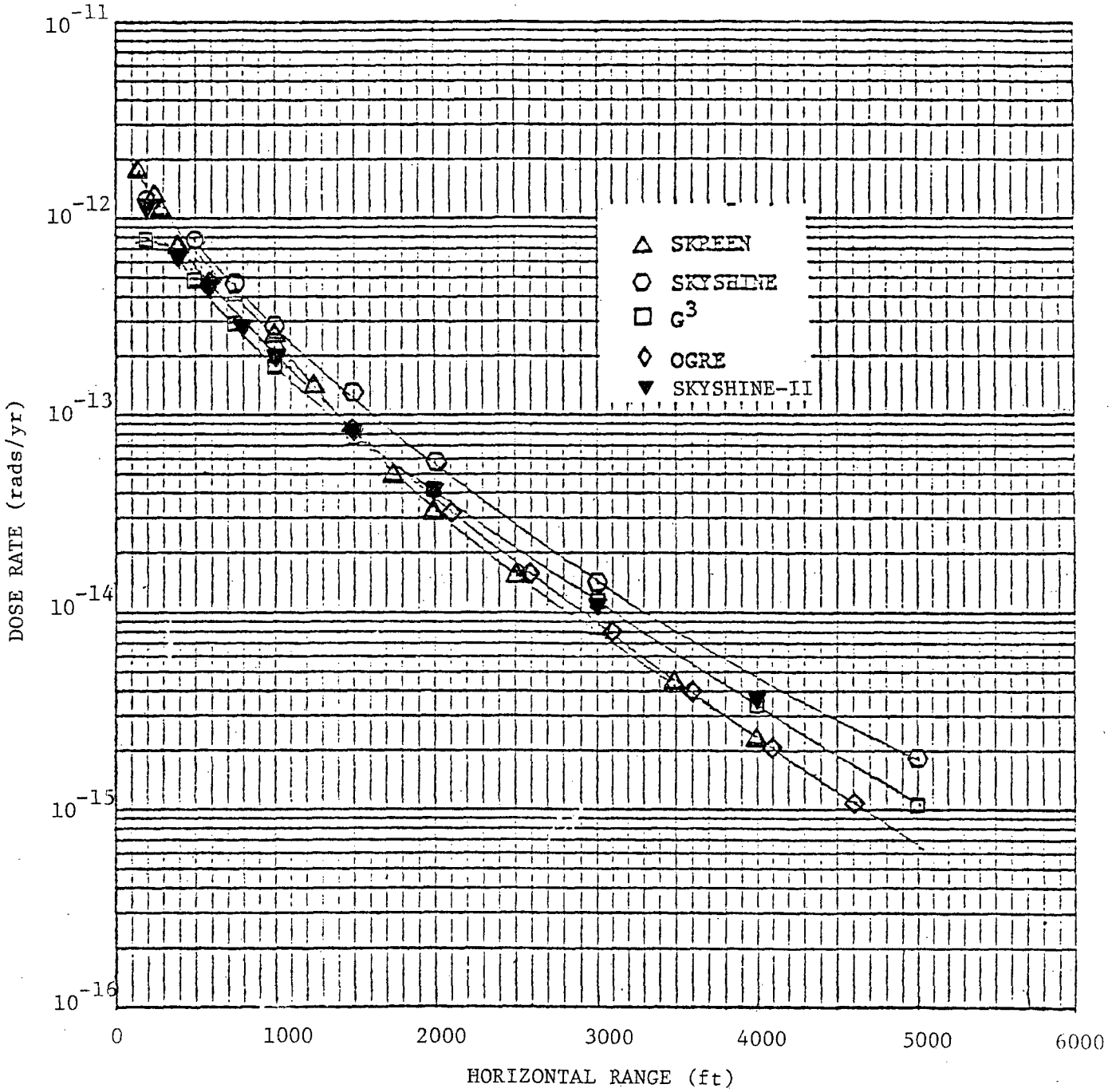

Fig. 9. Scattered Dose Rate as a Function of Horizontal Range for the ANS-6.6.1 Reference Calculation I.2

emission energy interval, cpd, integrated source strengths and an indication as to whether the cpd is biased or unbiased. If the cpd defined is biased, a listing of the normal (unbiased) and biased energy differential distributions is included.

Shown on the third page of output is the wall composition and thickness data, and the geometry description of the structure. A pictorial representation is provided for each of the six surfaces of the structure. Shown for each surface is each of the horizontal and vertical divisions and the composition-thickness type assigned to each section of the surface. The horizontal divisions or heights of the sections are indicated from left to right across the page. The vertical divisions of the surface are read from the bottom to the top of each surface diagram. The composition-thickness type for each section is indicated by the number in the center of each section. A zero is indicative of a void. It should be remembered that the present version of the SKYSHINE-II program requires that a section be either a void or a non-void region. Non-void regions may be specified as either concrete or steel; the program computations are independent of composition type. In addition, there is no dependence upon the thickness of the non-void sections, as long as the thickness is specified as a non-zero number.

Page four of the printed output contains various parameters of interest. The source emission energy interval is given, as is the total number of histories to be run for each source point. The source parameters defined on cards AA and BB of the input (Table IV) are listed for each source point. Next a table is given which indicates the total number of source particles incident on each surface and each section of each surface. Also given are the receiver locations.

The following five pages of printed output list the dose rate components in units of millirad (air) per year for each of five detectors. Note that the only component calculated by the current version of SKYSHINE-II is the air-scattered dose resulting from that radiation which emanates through structure openings.

TABLE VI. LISTING OF ANS-6.6.1 SAMPLE PROBLEM INPUT

```
AMERICAN NATIONAL STANDARD:  ANS-6.6.1  REFERENCE CALCULATION I.2
 1.22E-3
       1
     4.0
       1
       1
       1      62.0
       1     150.0
       1
       1      62.0
       1     150.0
       1
       1      62.0
       1     100.0
       1
       1      62.0
       1     100.0
       1
       1     150.0
       1     100.0
       1
       1     150.0
       1     100.0
       0
   -50.0      50.0     -75.0      75.0       0.0      62.0
       0
AMERICAN NATIONAL STANDARD:  ANS-6.6.1  REFERENCE CALCULATION I.2
     100        10         1         0         1         0         0
       5
   200.0       0.0       0.0
   400.0       0.0       0.0
   600.0       0.0       0.0
   800.0       0.0       0.0
  1000.0       0.0       0.0
       2         0
   6.199     6.201
     0.0       1.0
     1.0       0.0
       1
     1.0       1.0      -1.0       0.0 1.5707963
     0.0       0.0      60.0
AMERICAN NATIONAL STANDARD:  ANS-6.6.1  REFERENCE CALCULATION I.2
     100        10         0         1         1         0         0
       5
  1500.0       0.0       3.0
  2000.0       0.0       3.0
  3000.0       0.0       3.0
  4000.0       0.0       3.0
  5000.0       0.0       3.0
       2         0
   6.199     6.201
     0.0       1.0
     1.0       0.0
       1
     1.0       1.0      -1.0       0.0 1.5707963
     0.0       0.0      60.0
```

TABLE VII. ANS-6.6.1 SAMPLE PROBLEM OUTPUT

```
AMERICAN NATIONAL STANDARD:  ANS-6.6.1  REFERENCE CALCULATION I,2
 AIR ATTENUATION COEFFICIENTS READ IN FOR PRIMARY GAMMA RAYS:        NTYPE = 1
  AIR DENSITY AT SITE (GM/CM**3) = 1.220E-03
  INITIAL RANDOM NUMBER IS          81765937
```

TABLE VII. (Cont'd)

*** SPECTRAL DATA ***

BOUNDARY NUMBER	ENERGY (MEV)	SPECTRAL CPD
1	6.199E+00	0.
2	6.201E+00	1.000E+00

INTEGRATED SOURCE STRENGTH (NORMAL) = 1.000E+00

SPECTRAL DISTRIBUTION IS NORMAL (UNBIASED)

TABLE VII. (Cont'd)

*** WALL DATA ***

THICKNESS TYPE	COMPOSITION	THICKNESS (FT - IN)
1	CONC	4 - 0

*** PROBLEM GEOMETRY***

```
      62.000!                          62.000!                          150.000!
   150.000----!                     100.000----!                     100.000----!
!     1      !                  !     1      !                  !     1      !
!------------!                  !------------!                  !------------!
```

1 BY 1 X1 | 1 BY 1 Y1 | 1 BY 1 FLOOR

```
      62.000!                          62.000!                          150.000!
   150.000----!                     100.000----!                     100.000----!
!     1      !                  !     1      !                  !     0      !
!------------!                  !------------!                  !------------!
```

1 BY 1 X2 | 1 BY 1 Y2 | 1 BY 1 ROOF

TABLE VII. (Cont'd)

*** SOURCE DATA ***

SOURCE ENERGY = 6.20 - 6.20 MEV

NUMBER OF PARTICLE HISTORIES RUN = 1000

SOURCE WEIGHT (PARTICLES/SEC)	SOURCE MULTIPLICATION FACTOR	SOURCE POSITION (FT) X	Y	Z	AXIS FOR BIASING X	Y	Z
1.000E+00(TM= 1.571)	1.000E+00	0.00	0.00	60.00	-0.00	-0.00	-0.00

WALL	POSITION (FT)	NO. INCIDENT GAMMAS	NO. GAMMAS INCIDENT ON EACH AREA A	B	C	D	E	F	G	H	I
X1	-50.00	12	12	0	0	0	0	0	0	0	0
X2	50.00	8	8	0	0	0	0	0	0	0	0
Y1	-75.00	0	0	0	0	0	0	0	0	0	0
Y2	75.00	3	3	0	0	0	0	0	0	0	0
FLOOR	0.00	0	0	0	0	0	0	0	0	0	0
ROOF	62.00	977	977	0	0	0	0	0	0	0	0

*** RECEIVER LOCATIONS ***

RECEIVER	X(FT)	Y(FT)	Z(FT)
= 1	200.0	0.0	0.0
= 2	400.0	0.0	0.0
= 3	600.0	0.0	0.0
= 4	800.0	0.0	0.0
= 5	1000.0	0.0	0.0

TABLE VII. (Cont'd)

AMERICAN NATIONAL STANDARD: ANS-6.6.1 REFERENCE CALCULATION 1.2

RECEIVER = 1 POSITION(FT) (X= 200.0 Y= 0.0 Z= 0.0)

DOSE RATE CONTRIBUTION(MR/YR)

RADIATION THROUGH ROOF OR OVER WALLS THEN AIR SCATTERING:

WALL	DOSE RATE	% DEVIATION
X1	0.	0.000
X2	0.	0.000
Y1	0.	0.000
Y2	0.	0.000
ROOF	1.15232E-09	3.764

RADIATION SCATTERING IN ROOF OR ABOVE WALLS DIRECTLY TO RECEIVER:

WALL	DOSE RATE	% DEVIATION
X1	0.	0.000
X2	0.	0.000
Y1	0.	0.000
Y2	0.	0.000
ROOF	0.	0.000

RADIATION SCATTERING IN ROOF OR ABOVE WALL HEIGHT THEN AIR SCATTERING.

WALL	DOSE RATE	% DEVIATION
X1	0.	0.000
X2	0.	0.000
Y1	0.	0.000
Y2	0.	0.000
ROOF	0.	0.000

RADIATION REFLECTED FROM INSIDE SURFACES DIRECTLY TO RECEIVER:

DOSE RATE	% DEVIATION
0.	0.000

RADIATION REFLECTED FROM INSIDE SURFACES THEN AIR SCATTERING:

WALL	DOSE RATE	% DEVIATION
X1	0.	0.000
X2	0.	0.000
Y1	0.	0.000
Y2	0.	0.000
FLOOR	0.	0.000
ROOF	0.	0.000

RADIATION PENETRATING WALL BELOW HEIGHT THEN AIR SCATTERING:

WALL	DOSE RATE	% DEVIATION
X1	0.	0.000
X2	0.	0.000
Y1	0.	0.000
Y2	0.	0.000

RADIATION SCATTERING IN WALL BELOW HEIGHT DIRECTLY TO RECEIVER:

WALL	DOSE RATE	% DEVIATION
X1	0.	0.000
X2	0.	0.000
Y1	0.	0.000
Y2	0.	0.000

RADIATION SCATTERING IN WALL BELOW HEIGHT THEN AIR SCATTERING:

WALL	DOSE RATE	% DEVIATION
X1	0.	0.000
X2	0.	0.000
Y1	0.	0.000
Y2	0.	0.000

DIRECT RADIATION THROUGH WALL X2 TO THE RECEIVER:

DOSE RATE
0.

TOTAL SCATTERED RADIATION AT RECEIVER 1:

DOSE RATE	% DEVIATION
1.15232E-09	3.764

TOTAL RADIATION AT RECEIVER 1:

DOSE RATE
1.15232E-09

TABLE VII. (Cont'd)

AMERICAN NATIONAL STANDARD: ANS-6.6.1 REFERENCE CALCULATION I.2

RECEIVER = 2 POSITION(FT) (X= 400.0 Y= 0.0 Z= 0.0)

DOSE RATE CONTRIBUTION(MR/YR)

RADIATION THROUGH ROOF OR OVER WALLS THEN AIR SCATTERING:

WALL	DOSE RATE	% DEVIATION
X1	0.	0.000
X2	0.	0.000
Y1	0.	0.000
Y2	0.	0.000
ROOF	6.68408E-10	7.392

RADIATION SCATTERING IN ROOF OR ABOVE WALLS DIRECTLY TO RECEIVER:

WALL	DOSE RATE	% DEVIATION
X1	0.	0.000
X2	0.	0.000
Y1	0.	0.000
Y2	0.	0.000
ROOF	0.	0.000

RADIATION SCATTERING IN ROOF OR ABOVE WALL HEIGHT THEN AIR SCATTERING.

WALL	DOSE RATE	% DEVIATION
X1	0.	0.000
X2	0.	0.000
Y1	0.	0.000
Y2	0.	0.000
ROOF	0.	0.000

RADIATION REFLECTED FROM INSIDE SURFACES DIRECTLY TO RECEIVER:

DOSE RATE	% DEVIATION
0.	0.000

RADIATION REFLECTED FROM INSIDE SURFACES THEN AIR SCATTERING:

WALL	DOSE RATE	% DEVIATION
X1	0.	0.000
X2	0.	0.000
Y1	0.	0.000
Y2	0.	0.000
FLOOR	0.	0.000
ROOF	0.	0.000

RADIATION PENETRATING WALL BELOW HEIGHT THEN AIR SCATTERING:

WALL	DOSE RATE	% DEVIATION
X1	0.	0.000
X2	0.	0.000
Y1	0.	0.000
Y2	0.	0.000

RADIATION SCATTERING IN WALL BELOW HEIGHT DIRECTLY TO RECEIVER:

WALL	DOSE RATE	% DEVIATION
X1	0.	0.000
X2	0.	0.000
Y1	0.	0.000
Y2	0.	0.000

RADIATION SCATTERING IN WALL BELOW HEIGHT THEN AIR SCATTERING:

WALL	DOSE RATE	% DEVIATION
X1	0.	0.000
X2	0.	0.000
Y1	0.	0.000
Y2	0.	0.000

DIRECT RADIATION THROUGH WALL X2 TO THE RECEIVER:

DOSE RATE
0.

TOTAL SCATTERED RADIATION AT RECEIVER 2:

DOSE RATE	% DEVIATION
6.68408E-10	7.392

TOTAL RADIATION AT RECEIVER 2:

DOSE RATE
6.68408E-10

TABLE VII. (Cont'd)

AMERICAN NATIONAL STANDARD: ANS-6.6.1 REFERENCE CALCULATION I.2

RECEIVER = 3 POSITION(FT) (X= 600.0 Y= 0.0 Z= 0.0)

DOSE RATE CONTRIBUTION(MR/YR)

RADIATION THROUGH ROOF OR OVER WALLS THEN AIR SCATTERING:

WALL	DOSE RATE	% DEVIATION
X1	0.	0.000
X2	0.	0.000
Y1	0.	0.000
Y2	0.	0.000
ROOF	4.38314E-10	10.784

RADIATION SCATTERING IN ROOF OR ABOVE WALLS DIRECTLY TO RECEIVER:

WALL	DOSE RATE	% DEVIATION
X1	0.	0.000
X2	0.	0.000
Y1	0.	0.000
Y2	0.	0.000
ROOF	0.	0.000

RADIATION SCATTERING IN ROOF OR ABOVE WALL HEIGHT THEN AIR SCATTERING,

WALL	DOSE RATE	% DEVIATION
X1	0.	0.000
X2	0.	0.000
Y1	0.	0.000
Y2	0.	0.000
ROOF	0.	0.000

RADIATION REFLECTED FROM INSIDE SURFACES DIRECTLY TO RECEIVER:

DOSE RATE	% DEVIATION
0.	0.000

RADIATION REFLECTED FROM INSIDE SURFACES THEN AIR SCATTERING:

WALL	DOSE RATE	% DEVIATION
X1	0.	0.000
X2	0.	0.000
Y1	0.	0.000
Y2	0.	0.000
FLOOR	0.	0.000
ROOF	0.	0.000

RADIATION PENETRATING WALL BELOW HEIGHT THEN AIR SCATTERING:

WALL	DOSE RATE	% DEVIATION
X1	0.	0.000
X2	0.	0.000
Y1	0.	0.000
Y2	0.	0.000

RADIATION SCATTERING IN WALL BELOW HEIGHT DIRECTLY TO RECEIVER:

WALL	DOSE RATE	% DEVIATION
X1	0.	0.000
X2	0.	0.000
Y1	0.	0.000
Y2	0.	0.000

RADIATION SCATTERING IN WALL BELOW HEIGHT THEN AIR SCATTERING:

WALL	DOSE RATE	% DEVIATION
X1	0.	0.000
X2	0.	0.000
Y1	0.	0.000
Y2	0.	0.000

DIRECT RADIATION THROUGH WALL X2 TO THE RECEIVER:

DOSE RATE

0.

TOTAL SCATTERED RADIATION AT RECEIVER 3:

DOSE RATE	% DEVIATION
4.38314E-10	10.784

TOTAL RADIATION AT RECEIVER 3:

DOSE RATE

4.38314E-10

TABLE VII. (Cont'd)

AMERICAN NATIONAL STANDARD: ANS-6.6.1 REFERENCE CALCULATION I.2

RECEIVER = 4 POSITION(FT) (X= 800.0 Y= 0.0 Z= 0.0)

DOSE RATE CONTRIBUTION(MR/YR)

RADIATION THROUGH ROOF OR OVER WALLS THEN AIR SCATTERING:

WALL	DOSE RATE	% DEVIATION
X1	0.	0.000
X2	0.	0.000
Y1	0.	0.000
Y2	0.	0.000
ROOF	2.84487E-10	11.929

RADIATION SCATTERING IN ROOF OR ABOVE WALLS DIRECTLY TO RECEIVER:

WALL	DOSE RATE	% DEVIATION
X1	0.	0.000
X2	0.	0.000
Y1	0.	0.000
Y2	0.	0.000
ROOF	0.	0.000

RADIATION SCATTERING IN ROOF OR ABOVE WALL HEIGHT THEN AIR SCATTERING.

WALL	DOSE RATE	% DEVIATION
X1	0.	0.000
X2	0.	0.000
Y1	0.	0.000
Y2	0.	0.000
ROOF	0.	0.000

RADIATION REFLECTED FROM INSIDE SURFACES DIRECTLY TO RECEIVER:

DOSE RATE	% DEVIATION
0.	0.000

RADIATION REFLECTED FROM INSIDE SURFACES THEN AIR SCATTERING:

WALL	DOSE RATE	% DEVIATION
X1	0.	0.000
X2	0.	0.000
Y1	0.	0.000
Y2	0.	0.000
FLOOR	0.	0.000
ROOF	0.	0.000

RADIATION PENETRATING WALL BELOW HEIGHT THEN AIR SCATTERING:

WALL	DOSE RATE	% DEVIATION
X1	0.	0.000
X2	0.	0.000
Y1	0.	0.000
Y2	0.	0.000

RADIATION SCATTERING IN WALL BELOW HEIGHT DIRECTLY TO RECEIVER:

WALL	DOSE RATE	% DEVIATION
X1	0.	0.000
X2	0.	0.000
Y1	0.	0.000
Y2	0.	0.000

RADIATION SCATTERING IN WALL BELOW HEIGHT THEN AIR SCATTERING:

WALL	DOSE RATE	% DEVIATION
X1	0.	0.000
X2	0.	0.000
Y1	0.	0.000
Y2	0.	0.000

DIRECT RADIATION THROUGH WALL X2 TO THE RECEIVER:

DOSE RATE
0.

TOTAL SCATTERED RADIATION AT RECEIVER 4:

DOSE RATE	% DEVIATION
2.84487E-10	11.929

TOTAL RADIATION AT RECEIVER 4:

DOSE RATE
2.84487E-10

TABLE VII. (Cont'd)

AMERICAN NATIONAL STANDARD: ANS-6.6.1 REFERENCE CALCULATION I.2

RECEIVER = 5 POSITION(FT) (X= 1000.0 Y= 0.0 Z= 0.0)

DOSE RATE CONTRIBUTION(MR/YR)

RADIATION THROUGH ROOF OR OVER WALLS THEN AIR SCATTERING:

WALL	DOSE RATE	% DEVIATION
X1	0.	0.000
X2	0.	0.000
Y1	0.	0.000
Y2	0.	0.000
ROOF	2.09810E-10	17.649

RADIATION SCATTERING IN ROOF OR ABOVE WALLS DIRECTLY TO RECEIVER:

WALL	DOSE RATE	% DEVIATION
X1	0.	0.000
X2	0.	0.000
Y1	0.	0.000
Y2	0.	0.000
ROOF	0.	0.000

RADIATION SCATTERING IN ROOF OR ABOVE WALL HEIGHT THEN AIR SCATTERING.

WALL	DOSE RATE	% DEVIATION
X1	0.	0.000
X2	0.	0.000
Y1	0.	0.000
Y2	0.	0.000
ROOF	0.	0.000

RADIATION REFLECTED FROM INSIDE SURFACES DIRECTLY TO RECEIVER:

DOSE RATE	% DEVIATION
0.	0.000

RADIATION REFLECTED FROM INSIDE SURFACES THEN AIR SCATTERING:

WALL	DOSE RATE	% DEVIATION
X1	0.	0.000
X2	0.	0.000
Y1	0.	0.000
Y2	0.	0.000
FLOOR	0.	0.000
ROOF	0.	0.000

RADIATION PENETRATING WALL BELOW HEIGHT THEN AIR SCATTERING:

WALL	DOSE RATE	% DEVIATION
X1	0.	0.000
X2	0.	0.000
Y1	0.	0.000
Y2	0.	0.000

RADIATION SCATTERING IN WALL BELOW HEIGHT DIRECTLY TO RECEIVER:

WALL	DOSE RATE	% DEVIATION
X1	0.	0.000
X2	0.	0.000
Y1	0.	0.000
Y2	0.	0.000

RADIATION SCATTERING IN WALL BELOW HEIGHT THEN AIR SCATTERING:

WALL	DOSE RATE	% DEVIATION
X1	0.	0.000
X2	0.	0.000
Y1	0.	0.000
Y2	0.	0.000

DIRECT RADIATION THROUGH WALL X2 TO THE RECEIVER:

DOSE RATE

0.

TOTAL SCATTERED RADIATION AT RECEIVER 5:

DOSE RATE	% DEVIATION
2.09810E-10	17.649

TOTAL RADIATION AT RECEIVER 5:

DOSE RATE

2.09810E-10

REFERENCES

1. D. G. Collins, et al., A Method for Evaluating Effects of Structure Design on Gamma-Ray Dose Rates, Radiation Research Associates, Inc. Report RRA-T7204 (May 1972)

2. D. G. Collins, et al., SKYSHINE, A Computer Procedure for Evaluating Effects of Structure Design on N-16 Gamma-Ray Dose Rates, Radiation Research Associates, Inc. Report RRA-T7209 (November 1972)

3. J. H. Price, et al., Utilization Instructions for SKYSHINE, Radiation Research Associates, Inc. Report RRA-N7608 (August 1976)

4. M. B. Wells and R. B. Livesay, Calculational Procedure for Evaluating Time- and Spatial-Dependent Energy Deposition in Air for Anisotropic Nuclear Sources, Radiation Research Associates, Inc. Technical Report RRA-T7814 (1979)

5. J. D. Marshall, M. B. Wells, F. O. Leopard, and K. W. Tompkins, Monte Carlo Procedures for Transport of X-Rays and Fluorescent Light Through a Spherical, Altitude Dependent Atmosphere, Radiation Research Associates, Inc. Technical Report RRA-T94-1 (30 June 1969)

6. J. D. Marshall, Utilization Instructions for ZAPN, A Monte Carlo Neutron Transport Procedure, Radiation Research Associates, Inc. Research Note RRA-N7517 (September 1975)

7. J. D. Marshall, Utilization Instructions for ZAPGAM, A Monte Carlo Secondary Gamma-Ray Transport Procedure, Radiation Research Associates, Inc. Research Note RRA-N7601 (January 1976)

8. C. D. Zerby, Radiation Flux Transformation as a Function of Density of an Infinite Medium with Anisotropic Point Sources, Oak Ridge National Laboratory, USAEC Report ORNL-2100 (October 1956)

9. C. M. Lampley, Utilization Instructions for QADMOD, Radiation Research Associates, Inc. Report RRA-N7805 (September 1978)

10. R. W. Peelle and F. C. Maienshein, The Absolute Spectrum of Photons Emitted in Coincidence with Thermal-Neutron Fission of Uranium-235, Oak Ridge National Laboratory, USAEC Report ORNL-4457 (1970)

11. N. M. Schaeffer, ed., Reactor Shielding for Nuclear Engineers, Radiation Research Associates, Inc., USAEC TID-25951 (1973)

12. Proposed American National Standard ANS-6.6.1, "Calculation and Measurement of Direct and Scattered Gamma Radiation from LWR Nuclear Power Plants," First Draft (January 1978)

13. M. B. Wells and R. L. Swanson, Analysis of N-16 Radiation Measurements at the Cooper Nuclear Station, Radiation Research Associates, Inc. Technical Report RRA-T7604 (EPRI NP-243) (April 1977)

APPENDIX A: UTILIZATION INSTRUCTIONS FOR OPERATION OF THE SKYSHINE-II PROCEDURE AT THE BROOKHAVEN NATIONAL LABORATORY CENTRAL SCIENTIFIC COMPUTING FACILITY

The present version of the SKYSHINE-II computer code, as described in this report, has been made operational on the CDC7600 located at the BNL-CSCF. A tape (serial number K4035) has been written at the BNL-CSCF which contains the permanent file RRASKYSHN2, ID=ZZRNRC. RRASKYSHN2 consists of six partitions: (1) OLDPL--the RRASKYSHN2 program library in UPDATE format, (2) LGO--a relocatable binary (object) file, (3) ABS--an absolute file, (4) RRAPRIGAM--the primary gamma-ray transmission data file, (5) RRANEUTRN--the neutron transmission data file, and (6) RRASECGAM --the secondary gamma-ray transmission data file. A listing of the JCL required to manipulate the RRASKYSHN2 files in various modes at the BNL-CSCF is shown in Figs. A1 through A6.

The listing in Fig. A3 is an illustration of the JCL required to execute the ANS-6.6.1 reference calculation discussed in Section VII. Note that the primary gamma-ray transmission data file, RRAPRIGAM, has been assigned to logical unit 8 via the ATTACH command. This procedure defines the radiative source type for the ensuing SKYSHINE-II calculation. For calculations which involve one of the other sources, the appropriate data file (RRANEUTRN or RRASECGAM) must be attached to logical unit 8 in a similar manner. The JCL listed in Figs. A4 through A6 show how each of the three data files may be extracted from tape and catalogued as permanent files.

The SKYSHINE-II program requires approximately 24K words of core storage to execute a problem on the CDC7600. Standard CDC I/O units, logical units 5 and 6, are used for the card input and printer, respectively. As described above, the transmission data base is read from logical unit 8. No additional external storage devices are required.

```
RRA,STMFZ,T37,P2.                          LAMPLEY (817) 731-2711
ACCOUNT
REQUEST,FILE,*PF.
STAGE,TAPE,PRE,PE,E,VSN=K4035.
RFL,20000.
COPYP,TAPE,FILE,3.
CATALOG,FILE,RRASKYSHN2,ID=ZZRNRC,RP=999.
?      789 CARD
?      6789 CARD
```

Fig. A1. Illustration of the JCL Required to Copy RRASKYSHN2 from Tape

```
RRA,STMFZ,TP0,T37.                         LAMPLEY (817) 731-2711
ACCOUNT
ATTACH,FILE,RRASKYSHN2,ID=ZZRNRC,MR=1.
COPYP,FILE,OLDPL.
UPDATE.
FTN,I,A,PL=10000.
COPYP,FILE,GO.
RETURN,FILE.
ATTACH,TAPE8,RRAPRIGAM,ID=ZZRNRC,MR=1.
LDSET,PRESET=ZERO.
LOAD,LGO.
GO.
?      789 CARD
***** UPDATE DIRECTIVES *****
?      789 CARD
***** CARD INPUT DATA *****
?      6789 CARD
```

Fig. A2. Illustration of the JCL Required to Update and Execute RRASKYSHN2

```
RRA,STMFZ,TP0,T37.                                  LAMPLEY (817) 731-2711
ACCOUNT.
ATTACH,FILE,RRASKYSHN2,ID=ZZRNRC,MR=1.
SKIPF,FILE,2,17.
COPYP,FILE,GO.
RETURN,FILE.
ATTACH,TAPE8,RRAPRIGAM,ID=ZZRNRC,MR=1.
LDSET,PRESET=ZERO.
GO.
?      789 CARD
  AMERICAN NATIONAL STANDARD:  ANS-6.6.1  REFERENCE CALCULATION I,2
   1.22E-3
         1
       4.0
         1
         1       62.0
         1      150.0
         1
         1       62.0
         1      150.0
         1
         1       62.0
         1      100.0
         1
         1       62.0
         1      100.0
         1
         1      150.0
         1      100.0
         1
         1      150.0
         1      100.0
         0
     -50.0       50.0      -75.0       75.0        0.0       62.0
         0
  AMERICAN NATIONAL STANDARD:  ANS-6.6.1  REFERENCE CALCULATION I,2
       100          10           1           0           1           0           0
         5
     200.0         0.0         0.0
     400.0         0.0         0.0
     600.0         0.0         0.0
     800.0         0.0         0.0
    1000.0         0.0         0.0
         2           0
     6.199       6.201
       0.0         1.0
       1.0         0.0
         1
       1.0         1.0        -1.0        0.0 1.5707963
       0.0         0.0        60.0
  AMERICAN NATIONAL STANDARD:  ANS-6.6.1  REFERENCE CALCULATION I,2
       100          10           0           1           1           0           0
         5
    1500.0         0.0         3.0
    2000.0         0.0         3.0
    3000.0         0.0         3.0
    4000.0         0.0         3.0
    5000.0         0.0         3.0
         2           0
     6.199       6.201
       0.0         1.0
       1.0         0.0
         1
       1.0         1.0        -1.0        0.0 1.5707963
       0.0         0.0        60.0
?     6789 CARD
```

Fig. A3. Illustration of the JCL Required to Execute RRASKYSHN2

```
RRA,STMFZ,T37,P2.                          LAMPLEY (817) 731-2711
ACCOUNT
REQUEST,FILE,*PF.
STAGE,TAPE,PRE,PE,E,VSN=K4035.
RFL,20000.
SKIPF,TAPE,3,17.
COPYP,TAPE,FILE.
CATALOG,FILE,RRAPRIGAM,ID=ZZRNRC,RP=999.
?      789 CARD
?      6789 CARD
```

Fig. A4. Illustration of the JCL Required to Copy RRAPRIGAM from Tape

```
RRA,STMFZ,T37,P2.                          LAMPLEY (817) 731-2711
ACCOUNT
REQUEST,FILE,*PF.
STAGE,TAPE,PRE,PE,E,VSN=K4035.
RFL,20000.
SKIPF,TAPE,4,17.
COPYP,TAPE,FILE.
CATALOG,FILE,RRANEUTRN,ID=ZZRNRC,RP=999.
?      789 CARD
?      6789 CARD
```

Fig. A5. Illustration of the JCL Required to Copy RRANEUTRN from Tape

```
RRA,STMFZ,T37,P2.                          LAMPLEY (817) 731-2711
ACCOUNT
REQUEST,FILE,*PF.
STAGE,TAPE,PRE,PE,E,VSN=K4035.
RFL,20000.
SKIPF,TAPE,5,17.
COPYP,TAPE,FILE.
CATALOG,FILE,RRASECGAM,ID=ZZRNRC,RP=999.
?      789 CARD
?      6789 CARD
```

Fig. A6. Illustration of the JCL Required to Copy RRASECGAM from Tape

APPENDIX B: LISTING OF THE CURVE FIT COEFFICIENTS FOR THE ATMOSPHERIC TRANSMISSION DATA BASE

The curve fit coefficients for each of the three radiative source types considered by SKYSHINE-II are given in Tables BI, BII, and BIII. Each set of coefficients is listed by energy emission interval and the polar angle of emission interval. In addition, correlation coefficients are shown as an indication of goodness-of-fit.

TABLE BI. CURVE FIT COEFFICIENTS FOR ENERGY DEPOSITION VS RANGE BY LINE BEAM GAMMA RAY SOURCES

Energy Deposition (keV m^{-3}/keV of source energy)

SOURCE ENERGY 9.00E 00 - 1.00E 01 (MEV)

ANGLE (DEG)	A COEFFICIENT	B COEFFICIENT	C COEFFICIENT	CORRELATION COEFFICIENT
.0 - 1.0	-.96633	-2.22751	.00124	.99819
1.0 - 2.0	-7.23194	-1.59176	.00116	.91261
2.0 - 3.0	-10.55860	-1.03487	.00228	.88715
3.0 - 5.0	-10.71092	-1.10146	.00216	.94909
5.0 - 7.0	-15.95755	-.16114	.00399	.94797
7.0 - 10.0	-11.35975	-1.25891	.00159	.96544
10.0 - 15.0	-10.74326	-1.49491	.00144	.99118
15.0 - 20.0	-12.98317	-1.16770	.00256	.99824
20.0 - 30.0	-14.41240	-1.03743	.00298	.99645
30.0 - 40.0	-15.80386	-.88826	.00416	.99556
40.0 - 50.0	-15.84307	-.96073	.00479	.99930
50.0 - 60.0	-13.66694	-1.46949	.00482	.98694
60.0 - 70.0	-17.69994	-.66462	.00743	.99641
70.0 - 80.0	-19.20303	-.38074	.00883	.99862
80.0 - 90.0	-16.58897	-1.03876	.00657	.99314
90.0 - 100.0	-15.18189	-1.38329	.00580	.99526
100.0 - 120.0	-17.58408	-.82025	.00921	.99631
120.0 - 140.0	-15.98180	-1.25561	.00757	.99614
140.0 - 160.0	-17.44104	-.96695	.00862	.99299
160.0 - 180.0	-17.76595	-.92762	.00971	.96124

SOURCE ENERGY 8.00E 00 - 9.00E 00 (MEV)

ANGLE (DEG)	A COEFFICIENT	B COEFFICIENT	C COEFFICIENT	CORRELATION COEFFICIENT
.0 - 1.0	-1.27643	-2.19521	.00117	.99887
1.0 - 2.0	-6.02626	-1.86655	.00034	.95264
2.0 - 3.0	-9.32754	-1.41189	.00068	.76991
3.0 - 5.0	-10.08947	-1.22374	.00188	.94895
5.0 - 7.0	-11.52567	-1.02790	.00239	.99202
7.0 - 10.0	-12.54757	-.95172	.00256	.99123
10.0 - 15.0	-16.28294	-.31207	.00404	.98578
15.0 - 20.0	-12.47079	-1.27018	.00210	.98556
20.0 - 30.0	-13.79041	-1.12887	.00300	.99639
30.0 - 40.0	-13.44670	-1.35021	.00308	.98528
40.0 - 50.0	-15.25742	-1.08369	.00422	.99793
50.0 - 60.0	-15.89613	-1.03279	.00527	.99634
60.0 - 70.0	-17.16479	-.80018	.00655	.99079
70.0 - 80.0	-16.28027	-1.07681	.00599	.99595
80.0 - 90.0	-19.24190	-.47628	.00839	.99094
90.0 - 100.0	-19.02226	-.58027	.00797	.98506
100.0 - 120.0	-18.44720	-.70765	.00867	.99544
120.0 - 140.0	-17.89644	-.59165	.00817	.99444
140.0 - 160.0	-19.65666	-.42998	.01047	.99053
160.0 - 180.0	-15.62134	-1.48406	.00565	.98130

TABLE BI. (Continued)

Energy Deposition (keV m^{-3}/keV of source energy)

SOURCE ENERGY 7.00E 00 - 8.00E 00 (MEV)

ANGLE (DEG)	A COEFFICIENT	B COEFFICIENT	C COEFFICIENT	CORRELATION COEFFICIENT
.0 - 1.0	-1.61453	-2.07488	.00185	.99928
1.0 - 2.0	-6.32340	-1.76996	.00078	.93378
2.0 - 3.0	-5.99313	-1.90355	.00086	.97725
3.0 - 5.0	-10.52523	-1.13105	.00211	.98648
5.0 - 7.0	-10.45683	-1.26182	.00174	.91447
7.0 - 10.0	-9.85828	-1.47730	.00158	.98845
10.0 - 15.0	-12.93887	-1.00588	.00246	.98178
15.0 - 20.0	-15.12577	-.67508	.00348	.99275
20.0 - 30.0	-15.62516	-.71210	.00387	.99421
30.0 - 40.0	-14.92150	-1.02963	.00367	.99855
40.0 - 50.0	-15.88956	-.89034	.00511	.99798
50.0 - 60.0	-18.57085	-.41270	.00684	.99232
60.0 - 70.0	-16.88673	-.82599	.00654	.99880
70.0 - 80.0	-17.29063	-.75680	.00758	.99632
80.0 - 90.0	-19.08473	-.44583	.00851	.99788
90.0 - 100.0	-19.62418	-.27734	.01072	.99569
100.0 - 120.0	-19.91608	-.23485	.01189	.99806
120.0 - 140.0	-18.55849	-.64599	.00947	.99812
140.0 - 160.0	-26.29880	1.04575	.01546	.92575
160.0 - 180.0	-16.83810	-1.12779	.00843	.97734

SOURCE ENERGY 6.00E 00 - 7.00E 00 (MEV)

ANGLE (DEG)	A COEFFICIENT	B COEFFICIENT	C COEFFICIENT	CORRELATION COEFFICIENT
.0 - 1.0	-2.38309	-1.90294	.00227	.99756
1.0 - 2.0	-4.80042	-2.06050	.00030	.97759
2.0 - 3.0	-7.47771	-1.62820	.00138	.97796
3.0 - 5.0	-8.84173	-1.44803	.00170	.98898
5.0 - 7.0	-8.77149	-1.59304	.00125	.98523
7.0 - 10.0	-17.85831	.23745	.00540	.92109
10.0 - 15.0	-11.52531	-1.23708	.00229	.99362
15.0 - 20.0	-13.26708	-1.03658	.00275	.99138
20.0 - 30.0	-14.59400	-.88523	.00359	.99114
30.0 - 40.0	-15.08376	-.94101	.00395	.99339
40.0 - 50.0	-15.26557	-1.02850	.00436	.99697
50.0 - 60.0	-14.40582	-1.28041	.00472	.98164
60.0 - 70.0	-17.16684	-.70713	.00727	.99639
70.0 - 80.0	-16.82616	-.87989	.00692	.98854
80.0 - 90.0	-17.77261	-.70027	.00781	.99758
90.0 - 100.0	-18.42287	-.61044	.00838	.99448
100.0 - 120.0	-17.43135	-.82067	.00893	.99655
120.0 - 140.0	-15.56391	-1.35470	.00667	.99688
140.0 - 160.0	-20.75914	.05193	.01584	.96544
160.0 - 180.0	-22.50772	.16286	.01164	.96931

TABLE BI. (Continued)

Energy Deposition (keV m^{-3}/keV of source energy)

SOURCE ENERGY 5.00E 00 - 6.00E 00 (MEV)

ANGLE (DEG)	A COEFFICIENT	B COEFFICIENT	C COEFFICIENT	CORRELATION COEFFICIENT
.0 - 1.0	-1.17040	-2.17234	.00171	.99826
1.0 - 2.0	-6.28665	-1.77324	.00085	.93598
2.0 - 3.0	-6.92961	-1.70296	.00138	.96674
3.0 - 5.0	-9.37788	-1.31503	.00204	.97190
5.0 - 7.0	-9.19481	-1.50111	.00152	.97568
7.0 - 10.0	-10.63778	-1.27132	.00208	.98577
10.0 - 15.0	-12.49068	-1.02191	.00286	.94921
15.0 - 20.0	-12.96586	-1.02922	.00303	.99434
20.0 - 30.0	-12.74737	-1.24221	.00294	.99646
30.0 - 40.0	-14.33475	-1.05459	.00387	.99678
40.0 - 50.0	-15.27230	-.94429	.00499	.99793
50.0 - 60.0	-15.37394	-1.05225	.00497	.99822
60.0 - 70.0	-15.79401	-.98227	.00612	.99821
70.0 - 80.0	-18.83327	-.39076	.00842	.99296
80.0 - 90.0	-16.85590	-.88791	.00704	.99627
90.0 - 100.0	-19.22762	-.30986	.01064	.99330
100.0 - 120.0	-16.74614	-.96728	.00832	.99711
120.0 - 140.0	-19.83728	-.38135	.00937	.98084
140.0 - 160.0	-20.87526	-.08079	.01287	.98450
160.0 - 180.0	-21.24854	-.07652	.01207	.97155

SOURCE ENERGY 4.00E 00 - 5.00E 00 (MEV)

ANGLE (DEG)	A COEFFICIENT	B COEFFICIENT	C COEFFICIENT	CORRELATION COEFFICIENT
.0 - 1.0	-1.35251	-2.09433	.00238	.99834
1.0 - 2.0	-6.39405	-1.64521	.00188	.97322
2.0 - 3.0	-5.14678	-2.03407	.00108	.97907
3.0 - 5.0	-13.22635	-.45479	.00436	.98073
5.0 - 7.0	-13.89037	-.39186	.00465	.97222
7.0 - 10.0	-12.03440	-.91836	.00329	.95405
10.0 - 15.0	-12.98685	-.83081	.00369	.99589
15.0 - 20.0	-14.23684	-.72083	.00396	.99295
20.0 - 30.0	-13.50491	-1.01001	.00362	.99845
30.0 - 40.0	-13.50518	-1.17783	.00370	.98860
40.0 - 50.0	-16.39047	-.66536	.00572	.99494
50.0 - 60.0	-16.86620	-.65382	.00626	.99408
60.0 - 70.0	-19.25792	-.24138	.00735	.98904
70.0 - 80.0	-17.19453	-.59774	.00913	.98648
80.0 - 90.0	-16.49124	-.93109	.00692	.99698
90.0 - 100.0	-20.81064	-.05883	.00936	.98501
100.0 - 120.0	-20.82613	-.04857	.01101	.99433
120.0 - 140.0	-18.14961	-.67325	.00935	.99495
140.0 - 160.0	-21.16092	.17101	.01616	.98456
160.0 - 180.0	-23.82805	.80598	.02023	.98415

TABLE BI. (Continued)

Energy Deposition (keV m^{-3}/keV of source energy)

SOURCE ENERGY 3.00E 00 - 4.00E 00 (MEV)

ANGLE (DEG)	A COEFFICIENT	B COEFFICIENT	C COEFFICIENT	CORRELATION COEFFICIENT
.0 - 1.0	-1.41427	-2.07019	.00286	.99899
1.0 - 2.0	-5.33547	-1.84693	.00191	.97964
2.0 - 3.0	-8.29190	-1.30205	.00302	.99647
3.0 - 5.0	-7.58098	-1.61380	.00204	.98298
5.0 - 7.0	-12.03496	-.77352	.00389	.90691
7.0 - 10.0	-11.16974	-1.03341	.00350	.99346
10.0 - 15.0	-12.45923	-.87951	.00394	.99704
15.0 - 20.0	-11.64471	-1.19637	.00326	.99630
20.0 - 30.0	-15.75365	-.45302	.00533	.99187
30.0 - 40.0	-13.30522	-1.14323	.00410	.99594
40.0 - 50.0	-15.40535	-.81598	.00530	.99532
50.0 - 60.0	-15.36346	-.90304	.00564	.99528
60.0 - 70.0	-14.99603	-1.04959	.00618	.99298
70.0 - 80.0	-14.69474	-1.13174	.00705	.99527
80.0 - 90.0	-17.08331	-.65098	.00886	.99738
90.0 - 100.0	-17.31468	-.67162	.00886	.99777
100.0 - 120.0	-17.30241	-.73850	.00875	.99870
120.0 - 140.0	-17.00349	-.88367	.00879	.99545
140.0 - 160.0	-21.66013	.16085	.01294	.99283
160.0 - 180.0	-19.71294	-.41913	.00929	.97835

SOURCE ENERGY 2.00E 00 - 3.00E 00 (MEV)

ANGLE (DEG)	A COEFFICIENT	B COEFFICIENT	C COEFFICIENT	CORRELATION COEFFICIENT
.0 - 1.0	-1.09777	-2.09146	.00374	.99643
1.0 - 2.0	-5.87928	-1.65446	.00310	.97922
2.0 - 3.0	-7.25144	-1.50154	.00327	.97955
3.0 - 5.0	-9.75290	-1.09374	.00397	.97097
5.0 - 7.0	-8.56222	-1.43949	.00304	.99293
7.0 - 10.0	-10.45913	-1.12257	.00384	.99588
10.0 - 15.0	-13.33892	-.61638	.00510	.99554
15.0 - 20.0	-14.00175	-.62580	.00498	.99585
20.0 - 30.0	-13.65808	-.82971	.00483	.99943
30.0 - 40.0	-14.28149	-.83548	.00510	.99852
40.0 - 50.0	-14.40747	-.93293	.00520	.99837
50.0 - 60.0	-14.93978	-.87661	.00644	.99888
60.0 - 70.0	-15.05494	-.93686	.00663	.99835
70.0 - 80.0	-16.73682	-.60065	.00866	.99854
80.0 - 90.0	-15.43850	-.93736	.00803	.99907
90.0 - 100.0	-18.04227	-.25090	.01270	.97706
100.0 - 120.0	-16.87531	-.75006	.00877	.99894
120.0 - 140.0	-15.51526	-1.16113	.00759	.99725
140.0 - 160.0	-18.00386	-.46767	.01329	.98238
160.0 - 180.0	-18.27325	-.51747	.01210	.98742

TABLE BI. (Continued)

Energy Deposition (keV m^{-3}/keV of source energy)

SOURCE ENERGY 1.00E 00 - 2.00E 00 (MEV)

ANGLE (DEG)	A COEFFICIENT	B COEFFICIENT	C COEFFICIENT	CORRELATION COEFFICIENT
.0 - 1.0	-1.88207	-1.83160	.00638	.99550
1.0 - 2.0	-6.15557	-1.55195	.00442	.98064
2.0 - 3.0	-6.68954	-1.57096	.00404	.99473
3.0 - 5.0	-7.61911	-1.43174	.00479	.99452
5.0 - 7.0	-8.74499	-1.29698	.00485	.99563
7.0 - 10.0	-10.51921	-1.02387	.00529	.98875
10.0 - 15.0	-10.74390	-1.09209	.00492	.99899
15.0 - 20.0	-12.33465	-.82242	.00584	.99803
20.0 - 30.0	-12.70635	-.38981	.00572	.99940
30.0 - 40.0	-12.41500	-1.07663	.00568	.99768
40.0 - 50.0	-13.64023	-.92274	.00646	.99952
50.0 - 60.0	-14.84865	-.73399	.00754	.99882
60.0 - 70.0	-17.12921	-.24467	.01027	.99190
70.0 - 80.0	-14.29750	-1.03933	.00677	.99821
80.0 - 90.0	-16.27524	-.66829	.00800	.99717
90.0 - 100.0	-15.49397	-.85092	.00832	.99638
100.0 - 120.0	-15.89609	-.78414	.00950	.99117
120.0 - 140.0	-17.14375	-.53206	.01147	.99347
140.0 - 160.0	-16.03120	-.82810	.01049	.99755
160.0 - 180.0	-13.88944	-1.46034	.00697	.99650

SOURCE ENERGY 5.00E-01 - 1.00E 00 (MEV)

ANGLE (DEG)	A COEFFICIENT	B COEFFICIENT	C COEFFICIENT	CORRELATION COEFFICIENT
.0 - 1.0	-1.70224	-1.88534	.00706	.99684
1.0 - 2.0	-3.74522	-2.03614	.00489	.98497
2.0 - 3.0	-6.78916	-1.40120	.00749	.98978
3.0 - 5.0	-9.66956	-.83778	.00962	.98304
5.0 - 7.0	-10.30129	-.82406	.00905	.99476
7.0 - 10.0	-13.67237	-.15578	.01097	.98426
10.0 - 15.0	-12.91123	-.51830	.00809	.99017
15.0 - 20.0	-13.44011	-.51253	.00787	.98185
20.0 - 30.0	-16.17589	.03926	.01026	.99247
30.0 - 40.0	-14.68676	-.36593	.00975	.99730
40.0 - 50.0	-13.04298	-.88446	.00769	.99903
50.0 - 60.0	-14.44376	-.62403	.00914	.99786
60.0 - 70.0	-16.26572	-.25079	.01107	.99339
70.0 - 80.0	-15.89551	-.39649	.01097	.99499
80.0 - 90.0	-15.63542	-.59517	.00945	.99328
90.0 - 100.0	-15.25005	-.55038	.01278	.99305
100.0 - 120.0	-15.51944	-.56528	.01256	.99751
120.0 - 140.0	-16.45744	-.48418	.01152	.99355
140.0 - 160.0	-15.57878	-.66388	.01211	.99852
160.0 - 180.0	-14.66253	-.93023	.01075	.99745

TABLE BI. (Continued)

Energy Deposition (keV m^{-3}/keV of source energy)

SOURCE ENERGY 1.00E-01 - 5.00E-01 (MEV)

ANGLE (DEG)	A COEFFICIENT	B COEFFICIENT	C COEFFICIENT	CORRELATION COEFFICIENT
.0 - 1.0	-3.03216	-1.36209	.01758	.97862
1.0 - 2.0	-4.02539	-1.95695	.00743	.98767
2.0 - 3.0	-5.00325	-1.37462	.00689	.98974
3.0 - 5.0	-7.79520	-1.32186	.00879	.99643
5.0 - 7.0	-8.64205	-1.17512	.00942	.99857
7.0 - 10.0	-9.09309	-1.15442	.00919	.99857
10.0 - 15.0	-9.36501	-1.16253	.00944	.99906
15.0 - 20.0	-11.28526	-.75515	.01147	.99808
20.0 - 30.0	-10.62629	-1.08614	.00891	.99689
30.0 - 40.0	-12.17277	-.71810	.01192	.99536
40.0 - 50.0	-13.91578	-.31443	.01483	.98573
50.0 - 60.0	-12.97496	-.73646	.01128	.99926
60.0 - 70.0	-12.52756	-.90100	.01083	.99926
70.0 - 80.0	-12.80100	-.93309	.01002	.99829
80.0 - 90.0	-14.43838	-.51621	.01326	.99914
90.0 - 100.0	-13.30396	-.81320	.01255	.99831
100.0 - 120.0	-13.95091	-.70494	.01294	.99872
120.0 - 140.0	-13.42071	-.89696	.01199	.99502
140.0 - 160.0	-13.24349	-.96503	.01198	.99915
160.0 - 180.0	-14.60762	-.45341	.01852	.98436

SOURCE ENERGY 1.00E-02 - 1.00E-01 (MEV)

ANGLE (DEG)	A COEFFICIENT	B COEFFICIENT	C COEFFICIENT	CORRELATION COEFFICIENT
.0 - 1.0	2.64685	-3.05353	.00944	.99030
1.0 - 2.0	.34319	-3.03892	.00562	.98876
2.0 - 3.0	-2.23370	-2.43497	.01010	.99099
3.0 - 5.0	-3.63825	-2.13858	.01288	.99428
5.0 - 7.0	-5.68574	-1.73715	.01361	.99786
7.0 - 10.0	-6.19980	-1.67393	.01435	.99636
10.0 - 15.0	-7.36487	-1.45444	.01539	.99612
15.0 - 20.0	-9.98350	-.67649	.02337	.98299
20.0 - 30.0	-7.86144	-1.55991	.01343	.99876
30.0 - 40.0	-9.12073	-1.28620	.01615	.99859
40.0 - 50.0	-8.91406	-1.48840	.01327	.99928
50.0 - 60.0	-9.65228	-1.27510	.01723	.97333
60.0 - 70.0	-8.75517	-1.69228	.01234	.99823
70.0 - 80.0	-9.41166	-1.51541	.01453	.99813
80.0 - 90.0	-10.59076	-1.14491	.01910	.99641
90.0 - 100.0	-10.92487	-1.01646	.02190	.99417
100.0 - 120.0	-10.87449	-1.13016	.01969	.99748
120.0 - 140.0	-10.25175	-1.37627	.01667	.99924
140.0 - 160.0	-10.00213	-1.49537	.01582	.99136
160.0 - 180.0	-10.47370	-1.32353	.01834	.99517

TABLE BII. CURVE FIT COEFFICIENTS FOR ENERGY DEPOSITION VS RANGE BY LINE BEAM NEUTRON SOURCES

Energy Deposition (keV m^{-3}/source neutron)

SOURCE ENERGY 1.35E 01 - 1.50E 01 (MEV)

ANGLE (DEG)	A COEFFICIENT	B COEFFICIENT	C COEFFICIENT	CORRELATION COEFFICIENT
.0 - 1.0	11.79056	-2.36562	.00548	.99698
1.0 - 2.0	5.24897	-2.06060	.00341	.97034
2.0 - 3.0	4.91034	-2.04412	.00314	.98280
3.0 - 5.0	2.31310	-1.53585	.00477	.98539
5.0 - 7.0	.48599	-1.18921	.00591	.99368
7.0 - 10.0	-.53407	-1.12414	.00537	.99582
10.0 - 15.0	-.88263	-1.21437	.00421	.99680
15.0 - 20.0	-8.13474	.17334	.00729	.85917
20.0 - 30.0	-2.92079	-1.04224	.00445	.99749
30.0 - 40.0	-2.99084	-1.17425	.00421	.99634
40.0 - 50.0	-6.03064	-.67306	.00490	.98771
50.0 - 60.0	-3.97593	-1.16993	.00400	.99715
60.0 - 70.0	-4.30739	-1.18327	.00404	.99489
70.0 - 80.0	-4.98598	-1.11241	.00403	.98518
80.0 - 90.0	-6.83104	-.81463	.00456	.94894
90.0 - 100.0	-4.33661	-1.40606	.00322	.97171
100.0 - 120.0	-9.73293	-.26277	.00577	.96823
120.0 - 140.0	-6.70316	-.99282	.00414	.98992
140.0 - 160.0	-17.88844	1.29358	.01022	.95034
160.0 - 180.0	-11.80315	.04241	.00593	.88055

SOURCE ENERGY 1.20E 01 - 1.35E 01 (MEV)

ANGLE (DEG)	A COEFFICIENT	B COEFFICIENT	C COEFFICIENT	CORRELATION COEFFICIENT
.0 - 1.0	11.26933	-2.23524	.00617	.99941
1.0 - 2.0	5.23767	-1.98559	.00397	.98663
2.0 - 3.0	3.75839	-1.81088	.00424	.98445
3.0 - 5.0	1.77241	-1.46569	.00497	.99249
5.0 - 7.0	-1.27108	-.95004	.00570	.99744
7.0 - 10.0	-.34407	-1.20438	.00523	.99378
10.0 - 15.0	.10230	-1.37467	.00484	.99595
15.0 - 20.0	-1.15953	-1.27707	.00433	.99535
20.0 - 30.0	-2.33669	-1.21581	.00403	.99623
30.0 - 40.0	-4.23669	-.93110	.00470	.99718
40.0 - 50.0	-5.08931	-.90594	.00438	.97062
50.0 - 60.0	-5.16307	-.94760	.00435	.99463
60.0 - 70.0	-5.43062	-.91925	.00472	.99487
70.0 - 80.0	-5.87579	-.83287	.00518	.99406
80.0 - 90.0	-5.96258	-.92643	.00469	.97527
90.0 - 100.0	-6.33761	-.95980	.00442	.98958
100.0 - 120.0	-8.52367	-.51110	.00570	.98806
120.0 - 140.0	-7.42984	-.83067	.00480	.93919
140.0 - 160.0	-5.04151	-1.28226	.00384	.98632
160.0 - 180.0	-15.01999	.69908	.00864	.93689

TABLE BII. (continued)

Energy Deposition (keV m^{-3}/source neutron)

SOURCE ENERGY 1.00E 01 - 1.20E 01 (MEV)

ANGLE (DEG)	A COEFFICIENT	B COEFFICIENT	C COEFFICIENT	CORRELATION COEFFICIENT
.0 - 1.0	9.50477	-1.77753	.00889	.99262
1.0 - 2.0	4.94407	-2.07079	.00332	.97861
2.0 - 3.0	3.71430	-1.81282	.00430	.99108
3.0 - 5.0	.35750	-1.22063	.00556	.99123
5.0 - 7.0	-.89430	-1.19589	.00426	.98372
7.0 - 10.0	-.76286	-1.18851	.00501	.99278
10.0 - 15.0	-.50710	-1.38270	.00393	.99764
15.0 - 20.0	-3.00566	-.96529	.00465	.99708
20.0 - 30.0	-3.10167	-1.08819	.00430	.99533
30.0 - 40.0	-5.57215	-.72849	.00482	.99507
40.0 - 50.0	-3.04027	-1.36928	.00318	.99651
50.0 - 60.0	-3.69386	-1.26133	.00368	.99610
60.0 - 70.0	-6.47028	-.72164	.00491	.99506
70.0 - 80.0	-3.82422	-1.36142	.00324	.99343
80.0 - 90.0	-6.11952	-.93009	.00425	.98793
90.0 - 100.0	-4.59395	-1.27023	.00370	.99261
100.0 - 120.0	-5.70311	-1.08788	.00412	.99692
120.0 - 140.0	-9.07787	-.43378	.00532	.99525
140.0 - 160.0	-19.44630	1.70296	.00980	.88352
160.0 - 180.0	-17.39287	1.24770	.00818	.84094

SOURCE ENERGY 7.79E 00 - 1.00E 01 (MEV)

ANGLE (DEG)	A COEFFICIENT	B COEFFICIENT	C COEFFICIENT	CORRELATION COEFFICIENT
.0 - 1.0	9.81065	-2.05746	.00576	.99941
1.0 - 2.0	2.56297	-1.58046	.00461	.98011
2.0 - 3.0	.88028	-1.32620	.00465	.98537
3.0 - 5.0	.71621	-1.48396	.00323	.99093
5.0 - 7.0	-1.87482	-.99178	.00463	.99620
7.0 - 10.0	-5.10634	-.43421	.00559	.79384
10.0 - 15.0	-4.41976	-.69269	.00455	.99791
15.0 - 20.0	-2.89287	-1.08081	.00396	.99474
20.0 - 30.0	-4.29795	-.92956	.00388	.99500
30.0 - 40.0	-6.58738	-.55304	.00484	.99105
40.0 - 50.0	-8.10833	-.34815	.00513	.98619
50.0 - 60.0	-4.97775	-1.05174	.00389	.99073
60.0 - 70.0	-10.19976	-.04398	.00568	.97866
70.0 - 80.0	-6.05553	-.93273	.00398	.99537
80.0 - 90.0	-9.34437	-.27541	.00566	.98652
90.0 - 100.0	-4.12995	-1.39037	.00324	.99437
100.0 - 120.0	-6.98886	-.85874	.00438	.99575
120.0 - 140.0	-5.97017	-1.12741	.00356	.98957
140.0 - 160.0	-16.22093	1.00004	.00834	.91453
160.0 - 180.0	-14.23426	.63898	.00802	.96151

TABLE BII. (continued)

Energy Deposition (keV m^{-3}/source neutron)

SOURCE ENERGY 6.07E 00 - 7.79E 00 (MEV)

ANGLE (DEG)	A COEFFICIENT	B COEFFICIENT	C COEFFICIENT	CORRELATION COEFFICIENT
.0 - 1.0	9.65566	-2.06928	.00573	.99923
1.0 - 2.0	2.67321	-1.65162	.00407	.98132
2.0 - 3.0	1.93732	-1.60498	.00392	.99643
3.0 - 5.0	1.50255	-1.68339	.00308	.99013
5.0 - 7.0	-.25967	-1.34234	.00439	.99030
7.0 - 10.0	-2.76814	-.91882	.00468	.99269
10.0 - 15.0	-1.45742	-1.32007	.00327	.99039
15.0 - 20.0	-2.71218	-1.15751	.00343	.99268
20.0 - 30.0	-4.19859	-.97515	.00363	.99801
30.0 - 40.0	-4.53146	-1.01323	.00363	.99410
40.0 - 50.0	-4.75028	-1.05681	.00372	.98750
50.0 - 60.0	-5.62108	-.96514	.00385	.99058
60.0 - 70.0	-6.74248	-.78724	.00439	.98500
70.0 - 80.0	-7.24486	-.67830	.00506	.99424
80.0 - 90.0	-6.00192	-.99202	.00433	.99422
90.0 - 100.0	-6.52033	-.86041	.00510	.99743
100.0 - 120.0	-9.28897	-.44102	.00520	.98775
120.0 - 140.0	-5.63826	-1.20913	.00379	.97940
140.0 - 160.0	-5.46267	-1.32420	.00291	.96574
160.0 - 180.0	-33.83385	4.32862	.01414	.66800

SOURCE ENERGY 3.68E 00 - 6.07E 00 (MEV)

ANGLE (DEG)	A COEFFICIENT	B COEFFICIENT	C COEFFICIENT	CORRELATION COEFFICIENT
.0 - 1.0	10.24768	-2.28521	.00546	.99968
1.0 - 2.0	.42734	-.90669	.01045	.93806
2.0 - 3.0	-.83625	-1.01547	.00722	.98757
3.0 - 5.0	-2.44093	-.85204	.00563	.98227
5.0 - 7.0	-.81207	-1.26789	.00465	.99822
7.0 - 10.0	-2.08412	-1.06633	.00504	.98469
10.0 - 15.0	-1.44124	-1.28495	.00448	.99637
15.0 - 20.0	-2.94264	-1.06508	.00495	.99514
20.0 - 30.0	-3.17787	-1.09991	.00487	.99924
30.0 - 40.0	-4.19452	-1.03078	.00468	.99704
40.0 - 50.0	-4.36390	-1.09848	.00433	.99562
50.0 - 60.0	-5.61831	-.89455	.00490	.99841
60.0 - 70.0	-7.28311	-.59596	.00578	.99508
70.0 - 80.0	-7.71212	-.53747	.00597	.97943
80.0 - 90.0	-5.95613	-.97069	.00480	.99054
90.0 - 100.0	-5.29219	-1.11981	.00451	.99657
100.0 - 120.0	-5.63841	-1.06937	.00479	.99656
120.0 - 140.0	-5.63120	-1.06628	.00517	.99715
140.0 - 160.0	-4.14783	-1.39563	.00433	.99333
160.0 - 180.0	-6.66942	-.82944	.00610	.99104

TABLE BII. (continued)

Energy Deposition (keV m^{-3}/source neutron)

SOURCE ENERGY 2.86E 00 - 3.68E 00 (MEV)

ANGLE (DEG)	A COEFFICIENT	B COEFFICIENT	C COEFFICIENT	CORRELATION COEFFICIENT
.0 - 1.0	7.62988	-1.52476	.01206	.98276
1.0 - 2.0	4.70281	-2.26303	.00348	.98845
2.0 - 3.0	-1.07127	-1.12680	.00559	.98448
3.0 - 5.0	-1.41983	-1.26311	.00517	.95450
5.0 - 7.0	.53204	-1.64832	.00480	.98579
7.0 - 10.0	-1.34241	-1.38332	.00455	.99275
10.0 - 15.0	-2.74287	-1.08543	.00608	.99146
15.0 - 20.0	-6.42196	-.39121	.00714	.98103
20.0 - 30.0	-2.97897	-1.24325	.00487	.99485
30.0 - 40.0	-6.13328	-.71616	.00556	.99561
40.0 - 50.0	-5.45148	-.91443	.00537	.99788
50.0 - 60.0	-4.49311	-1.17142	.00468	.99726
60.0 - 70.0	-6.19228	-.84086	.00559	.99609
70.0 - 80.0	-6.20857	-.88564	.00539	.99691
80.0 - 90.0	-5.24122	-1.11142	.00506	.99461
90.0 - 100.0	-5.07182	-1.16894	.00455	.99808
100.0 - 120.0	-6.28082	-.89211	.00581	.99614
120.0 - 140.0	-7.28827	-.71418	.00601	.99798
140.0 - 160.0	-8.19918	-.52487	.00639	.99482
160.0 - 180.0	-5.29530	-1.27995	.00376	.98055

SOURCE ENERGY 2.23E 00 - 2.86E 00 (MEV)

ANGLE (DEG)	A COEFFICIENT	B COEFFICIENT	C COEFFICIENT	CORRELATION COEFFICIENT
.0 - 1.0	8.88444	-2.14909	.00589	.99911
1.0 - 2.0	2.20516	-1.86056	.00402	.96268
2.0 - 3.0	.56462	-1.58624	.00519	.99083
3.0 - 5.0	-2.35736	-.97368	.00668	.99665
5.0 - 7.0	-1.86164	-1.27017	.00483	.99348
7.0 - 10.0	-3.76630	-.90274	.00580	.99632
10.0 - 15.0	-6.52908	-.45242	.00601	.99056
15.0 - 20.0	-3.37672	-1.13968	.00490	.99578
20.0 - 30.0	-4.46286	-1.06511	.00417	.99220
30.0 - 40.0	-5.53271	-.88169	.00496	.99778
40.0 - 50.0	-6.29438	-.74835	.00568	.99669
50.0 - 60.0	-6.98314	-.64957	.00601	.99549
60.0 - 70.0	-7.02661	-.69539	.00592	.99793
70.0 - 80.0	-6.34268	-.84777	.00597	.98853
80.0 - 90.0	-8.20376	-.50456	.00641	.96687
90.0 - 100.0	-6.13506	-.94881	.00566	.99716
100.0 - 120.0	-6.37766	-.94809	.00549	.99871
120.0 - 140.0	-7.33567	-.75166	.00630	.99301
140.0 - 160.0	-8.23614	-.59582	.00623	.99148
160.0 - 180.0	-7.58790	-.50104	.01069	.98850

TABLE BII. (continued)

Energy Deposition (keV m^{-3}/source neutron)

SOURCE ENERGY 1.74E 00 - 2.23E 00 (MEV)

ANGLE (DEG)	A COEFFICIENT	B COEFFICIENT	C COEFFICIENT	CORRELATION COEFFICIENT
.0 - 1.0	8.85550	-2.22050	.00725	.99880
1.0 - 2.0	1.35221	-1.63654	.00570	.98506
2.0 - 3.0	-1.11340	-1.17079	.00774	.97927
3.0 - 5.0	-2.00894	-1.01988	.00871	.97269
5.0 - 7.0	-2.49455	-1.07597	.00711	.98337
7.0 - 10.0	-2.35355	-1.20675	.00590	.99290
10.0 - 15.0	-3.61162	-1.03153	.00573	.99809
15.0 - 20.0	-4.38563	-.91607	.00591	.99230
20.0 - 30.0	-5.27712	-.82465	.00592	.99920
30.0 - 40.0	-4.30696	-1.13267	.00483	.99798
40.0 - 50.0	-5.45819	-.90914	.00608	.99707
50.0 - 60.0	-5.83288	-.89287	.00603	.99533
60.0 - 70.0	-6.12784	-.83027	.00671	.99699
70.0 - 80.0	-7.20898	-.64755	.00683	.99921
80.0 - 90.0	-6.11664	-.91861	.00631	.98911
90.0 - 100.0	-8.45932	-.45857	.00701	.99476
100.0 - 120.0	-6.66268	-.85588	.00640	.99831
120.0 - 140.0	-7.10023	-.70346	.00821	.99266
140.0 - 160.0	-8.34345	-.42631	.00957	.98384
160.0 - 180.0	-9.06915	-.37819	.00892	.98346

SOURCE ENERGY 1.35E 00 - 1.74E 00 (MEV)

ANGLE (DEG)	A COEFFICIENT	B COEFFICIENT	C COEFFICIENT	CORRELATION COEFFICIENT
.0 - 1.0	4.96710	-.99660	.02005	.96106
1.0 - 2.0	-1.51000	-.77627	.01474	.93406
2.0 - 3.0	-.35406	-1.40667	.00747	.98221
3.0 - 5.0	-.72300	-1.41930	.00666	.99373
5.0 - 7.0	-1.25430	-1.45140	.00536	.99589
7.0 - 10.0	-1.76625	-1.37001	.00577	.99761
10.0 - 15.0	-3.17831	-1.18098	.00567	.99307
15.0 - 20.0	-7.56634	-.12039	.01094	.97035
20.0 - 30.0	-4.36360	-1.02480	.00622	.99864
30.0 - 40.0	-6.27738	-.57925	.00887	.99217
40.0 - 50.0	-5.77247	-.82469	.00684	.99839
50.0 - 60.0	-6.35641	-.77162	.00666	.99892
60.0 - 70.0	-8.12625	-.43125	.00763	.99658
70.0 - 80.0	-7.56873	-.55652	.00797	.99664
80.0 - 90.0	-6.24682	-.88404	.00706	.98880
90.0 - 100.0	-8.38553	-.35553	.00942	.98758
100.0 - 120.0	-7.27364	-.71764	.00743	.99714
120.0 - 140.0	-11.58822	.17555	.00961	.98114
140.0 - 160.0	-6.57263	-.96451	.00662	.99264
160.0 - 180.0	-10.04838	-.12053	.01046	.97478

TABLE BII. (continued)

Energy Deposition (keV m^{-3}/source neutron)

SOURCE ENERGY 8.23E-01 - 1.35E 00 (MEV)

ANGLE (DEG)	A COEFFICIENT	B COEFFICIENT	C COEFFICIENT	CORRELATION COEFFICIENT
.0 - 1.0	9.22130	-2.53636	.00706	.99632
1.0 - 2.0	1.35400	-1.71072	.00902	.98016
2.0 - 3.0	.82245	-1.93562	.00473	.98398
3.0 - 5.0	-1.73177	-1.20638	.00897	.99166
5.0 - 7.0	-4.07281	-.77945	.00930	.98801
7.0 - 10.0	-7.04072	-.09878	.01295	.98521
10.0 - 15.0	-3.81513	-1.00995	.00745	.99822
15.0 - 20.0	-5.18058	-.80677	.00760	.99705
20.0 - 30.0	-5.42355	-.84476	.00735	.99461
30.0 - 40.0	-9.37570	.06634	.01105	.97371
40.0 - 50.0	-5.86109	-.85632	.00732	.99871
50.0 - 60.0	-9.92652	-.02133	.00950	.98894
60.0 - 70.0	-7.08720	-.64723	.00822	.99700
70.0 - 80.0	-5.69876	-.99297	.00726	.99745
80.0 - 90.0	-8.59618	-.35914	.00941	.99210
90.0 - 100.0	-7.18905	-.73385	.00801	.98844
100.0 - 120.0	-6.32001	-.98006	.00686	.99608
120.0 - 140.0	-7.20748	-.78885	.00785	.99878
140.0 - 160.0	-7.45221	-.63943	.01001	.98134
160.0 - 180.0	-8.13768	-.46846	.01121	.98887

SOURCE ENERGY 5.00E-01 - 8.23E-01 (MEV)

ANGLE (DEG)	A COEFFICIENT	B COEFFICIENT	C COEFFICIENT	CORRELATION COEFFICIENT
.0 - 1.0	8.10296	-2.31653	.00842	.99833
1.0 - 2.0	1.62826	-1.85819	.00988	.90278
2.0 - 3.0	-1.22883	-1.33207	.00843	.98638
3.0 - 5.0	-3.22139	-1.03466	.00829	.99189
5.0 - 7.0	-1.57123	-1.51746	.00573	.99363
7.0 - 10.0	-3.41612	-1.12436	.00821	.99400
10.0 - 15.0	-5.87476	-.41282	.01370	.96139
15.0 - 20.0	-4.66505	-.99427	.00775	.99826
20.0 - 30.0	-7.18997	-.35813	.01176	.97770
30.0 - 40.0	-6.58375	-.64499	.00958	.99269
40.0 - 50.0	-7.05710	-.48562	.01176	.98669
50.0 - 60.0	-7.16132	-.61607	.00993	.99789
60.0 - 70.0	-9.58208	-.11029	.01132	.99276
70.0 - 80.0	-8.09494	-.50221	.00992	.99674
80.0 - 90.0	-9.22365	-.21301	.01219	.99615
90.0 - 100.0	-6.76100	-.97000	.00733	.98633
100.0 - 120.0	-6.35177	-1.03445	.00822	.99263
120.0 - 140.0	-7.19253	-.87080	.00896	.99861
140.0 - 160.0	-9.92802	-.20790	.01195	.99738
160.0 - 180.0	-7.35069	-.94062	.00772	.98852

TABLE BII. (continued)

Energy Deposition (keV m^{-3}/source neutron)

SOURCE ENERGY 6.76E-02 - 1.84E-01 (MEV)

ANGLE (DEG)	A COEFFICIENT	B COEFFICIENT	C COEFFICIENT	CORRELATION COEFFICIENT
.0 - 1.0	7.43626	-2.48994	.01422	.99911
1.0 - 2.0	.93444	-2.07323	.00955	.97967
2.0 - 3.0	-.93180	-1.67257	.01261	.98563
3.0 - 5.0	-4.63634	-.67432	.02112	.97438
5.0 - 7.0	-5.56882	-.63650	.01836	.99421
7.0 - 10.0	-4.11181	-1.04497	.01606	.99637
10.0 - 15.0	-4.78416	-1.02896	.01451	.99753
15.0 - 20.0	-5.73572	-.81304	.01559	.99506
20.0 - 30.0	-6.22143	-.75076	.01583	.99358
30.0 - 40.0	-7.59802	-.51062	.01692	.99840
40.0 - 50.0	-7.69642	-.55352	.01585	.99852
50.0 - 60.0	-7.60735	-.61165	.01623	.99820
60.0 - 70.0	-9.24743	-.21503	.01887	.99592
70.0 - 80.0	-8.53634	-.45704	.01713	.99808
80.0 - 90.0	-8.01825	-.70191	.01404	.99931
90.0 - 100.0	-9.69125	-.13723	.02052	.99618
100.0 - 120.0	-9.89925	-.10553	.02063	.99115
120.0 - 140.0	-8.49384	-.61467	.01610	.99871
140.0 - 160.0	-7.67083	-.91009	.01331	.99826
160.0 - 180.0	-10.62485	.05380	.02307	.98697

SOURCE ENERGY 2.48E-02 - 6.76E-02 (MEV)

ANGLE (DEG)	A COEFFICIENT	B COEFFICIENT	C COEFFICIENT	CORRELATION COEFFICIENT
.0 - 1.0	4.00964	-1.43323	.03751	.97308
1.0 - 2.0	.90863	-2.23729	.01735	.95995
2.0 - 3.0	-2.80540	-1.19085	.02328	.98753
3.0 - 5.0	-3.79337	-1.08558	.02167	.99078
5.0 - 7.0	-6.10797	-.61398	.02212	.99019
7.0 - 10.0	-5.67045	-.84073	.02013	.99552
10.0 - 15.0	-6.46482	-.65450	.02150	.99432
15.0 - 20.0	-6.28142	-.81598	.01929	.99888
20.0 - 30.0	-5.62375	-1.14625	.01551	.99758
30.0 - 40.0	-8.82228	-.32202	.02154	.99719
40.0 - 50.0	-7.54917	-.68077	.01983	.99865
50.0 - 60.0	-7.81580	-.68340	.01951	.99929
60.0 - 70.0	-6.84598	-1.03669	.01584	.99948
70.0 - 80.0	-7.23552	-.96818	.01663	.99753
80.0 - 90.0	-6.71063	-1.18471	.01501	.99642
90.0 - 100.0	-9.74254	-.39273	.02131	.99765
100.0 - 120.0	-9.70522	-.34782	.02241	.99715
120.0 - 140.0	-9.02416	-.55311	.02129	.99752
140.0 - 160.0	-8.79834	-.63961	.02095	.99676
160.0 - 180.0	-8.70491	-.60069	.02384	.99159

TABLE BII. (continued)

Energy Deposition (keV m^{-3}/source neutron)

SOURCE ENERGY 9.12E-03 - 2.48E-02 (MEV)

ANGLE (DEG)	A COEFFICIENT	B COEFFICIENT	C COEFFICIENT	CORRELATION COEFFICIENT
.0 - 1.0	5.35965	-2.30466	.02635	.99500
1.0 - 2.0	-1.85438	-1.64396	.01955	.98306
2.0 - 3.0	-1.34637	-1.96747	.01621	.99312
3.0 - 5.0	-2.75576	-1.70917	.01718	.99292
5.0 - 7.0	-3.66294	-1.48930	.01883	.98952
7.0 - 10.0	-6.22184	-.91990	.02106	.99490
10.0 - 15.0	-6.51298	-.86439	.02324	.99792
15.0 - 20.0	-6.03601	-1.09921	.02033	.99705
20.0 - 30.0	-7.88687	-.62199	.02333	.99524
30.0 - 40.0	-7.88324	-.78534	.02048	.99969
40.0 - 50.0	-7.89514	-.80678	.02118	.99771
50.0 - 60.0	-8.46468	-.74310	.02062	.99931
60.0 - 70.0	-8.84180	-.65306	.02205	.99897
70.0 - 80.0	-7.88852	-.99113	.01964	.99647
80.0 - 90.0	-8.96107	-.60782	.02487	.99613
90.0 - 100.0	-8.71496	-.78568	.02232	.99917
100.0 - 120.0	-9.03000	-.71197	.02344	.99684
120.0 - 140.0	-9.87680	-.50897	.02513	.99759
140.0 - 160.0	-9.42088	-.71241	.02202	.97924
160.0 - 180.0	-9.60334	-.74575	.02095	.99578

SOURCE ENERGY 3.35E-03 - 9.12E-03 (MEV)

ANGLE (DEG)	A COEFFICIENT	B COEFFICIENT	C COEFFICIENT	CORRELATION COEFFICIENT
.0 - 1.0	7.35574	-3.38484	.01534	.95778
1.0 - 2.0	-1.20790	-2.06728	.02164	.98391
2.0 - 3.0	-1.21169	-2.29598	.01583	.95962
3.0 - 5.0	-3.95152	-1.63501	.02006	.98513
5.0 - 7.0	-4.69443	-1.49769	.01967	.97072
7.0 - 10.0	-5.48689	-1.27093	.02283	.99145
10.0 - 15.0	-7.52082	-.73204	.02866	.99147
15.0 - 20.0	-7.94633	-.69574	.02692	.99257
20.0 - 30.0	-7.39079	-1.01873	.02213	.99741
30.0 - 40.0	-7.86859	-1.02839	.02087	.99662
40.0 - 50.0	-8.94595	-.73657	.02384	.99866
50.0 - 60.0	-8.69645	-.85078	.02266	.99847
60.0 - 70.0	-9.89769	-.61033	.02375	.99675
70.0 - 80.0	-9.48117	-.70360	.02427	.99700
80.0 - 90.0	-9.61577	-.75102	.02355	.99749
90.0 - 100.0	-9.31783	-.89691	.02190	.99909
100.0 - 120.0	-9.39635	-.88162	.02250	.99948
120.0 - 140.0	-10.59871	-.44247	.02820	.98861
140.0 - 160.0	-11.33757	-.35170	.02783	.99570
160.0 - 180.0	-10.99609	-.37323	.03047	.98728

TABLE BII. (continued)

Energy Deposition (keV m^{-3}/source neutron)

SOURCE ENERGY 1.00E-03 - 3.35E-03 (MEV)

ANGLE (DEG)	A COEFFICIENT	B COEFFICIENT	C COEFFICIENT	CORRELATION COEFFICIENT
.0 - 1.0	4.11061	-2.52256	.03012	.99781
1.0 - 2.0	-3.01635	-1.77615	.03265	.97478
2.0 - 3.0	-4.82241	-1.26912	.03438	.99025
3.0 - 5.0	-4.75477	-1.54329	.02435	.99132
5.0 - 7.0	-6.20932	-1.18098	.02920	.99205
7.0 - 10.0	-7.06406	-1.08133	.02789	.99705
10.0 - 15.0	-6.98916	-1.23949	.02282	.99778
15.0 - 20.0	-8.40852	-.92405	.02528	.99854
20.0 - 30.0	-8.53149	-.96768	.02417	.99917
30.0 - 40.0	-8.97996	-.91987	.02414	.99795
40.0 - 50.0	-9.15976	-.96143	.02321	.99890
50.0 - 60.0	-11.30252	-.30461	.03146	.99453
60.0 - 70.0	-10.13361	-.77175	.02526	.99716
70.0 - 80.0	-10.51014	-.68648	.02640	.99878
80.0 - 90.0	-10.30633	-.75672	.02688	.99870
90.0 - 100.0	-10.88196	-.66406	.02612	.99896
100.0 - 120.0	-10.93105	-.63006	.02852	.99747
120.0 - 140.0	-11.89036	-.37191	.03149	.99701
140.0 - 160.0	-10.86911	-.80451	.02382	.99882
160.0 - 180.0	-11.28620	-.69302	.02500	.99600

TABLE BIII. CURVE FIT COEFFICIENTS FOR SECONDARY GAMMA-RAY ENERGY DEPOSITION VS RANGE BY LINE BEAM SOURCES

Energy Deposition (keV m^{-3}/source neutron)

SOURCE ENERGY 1.35E 01 - 1.50E 01 (MEV)

ANGLE (DEG)	A COEFFICIENT	B COEFFICIENT	C COEFFICIENT	CORRELATION COEFFICIENT
.0 - 1.0	17.95058	-5.06201	.00061	.90930
1.0 - 2.0	10.34301	-3.77223	-.00105	.84083
2.0 - 3.0	-3.22689	-1.33355	.00146	.61311
3.0 - 5.0	2.36154	-2.21193	.00180	.84140
5.0 - 7.0	-6.80270	-.41572	.00530	.86447
7.0 - 10.0	-2.26787	-1.22284	.00429	.98544
10.0 - 15.0	-1.17026	-1.63323	.00250	.94884
15.0 - 20.0	-4.88169	-.90584	.00378	.95883
20.0 - 30.0	-2.77269	-1.35445	.00311	.99290
30.0 - 40.0	-3.35790	-1.30136	.00329	.99467
40.0 - 50.0	-5.50339	-.95667	.00340	.98662
50.0 - 60.0	-6.02387	-.87309	.00382	.99430
60.0 - 70.0	-6.31066	-.84846	.00424	.98414
70.0 - 80.0	-6.04042	-.95256	.00401	.98097
80.0 - 90.0	-9.83301	-.23498	.00523	.92590
90.0 - 100.0	-8.96184	-.44098	.00488	.98332
100.0 - 120.0	-9.61474	-.26388	.00514	.96013
120.0 - 140.0	-4.17250	-1.48226	.00313	.97478
140.0 - 160.0	-10.34341	-.15806	.00645	.94203
160.0 - 180.0	-28.46542	3.36884	.01203	.76698

SOURCE ENERGY 1.20E 01 - 1.35E 01 (MEV)

ANGLE (DEG)	A COEFFICIENT	B COEFFICIENT	C COEFFICIENT	CORRELATION COEFFICIENT
.0 - 1.0	-3.31018	-.64065	.00913	.78355
1.0 - 2.0	-20.21802	2.77789	.01559	.83778
2.0 - 3.0	-20.99356	2.21162	.00887	.67106
3.0 - 5.0	-.46695	-1.42776	.00383	.97570
5.0 - 7.0	-13.94145	.92178	.00671	.80983
7.0 - 10.0	-16.61585	1.52025	.00834	.85388
10.0 - 15.0	-4.26579	-.95616	.00405	.95045
15.0 - 20.0	-4.68618	-.86490	.00446	.98941
20.0 - 30.0	-5.91406	-.71212	.00443	.97588
30.0 - 40.0	-6.05777	-.74058	.00435	.98300
40.0 - 50.0	-9.26711	-.17787	.00541	.94134
50.0 - 60.0	-6.81645	-.67839	.00453	.98134
60.0 - 70.0	-3.24639	-1.50155	.00267	.98355
70.0 - 80.0	-6.18267	-.88692	.00399	.98693
80.0 - 90.0	-11.98244	.21144	.00600	.94545
90.0 - 100.0	-4.19675	-1.35171	.00347	.97149
100.0 - 120.0	-4.11207	-1.40088	.00321	.99570
120.0 - 140.0	-6.80384	-.91511	.00415	.99291
140.0 - 160.0	-6.50814	-1.00248	.00433	.95858
160.0 - 180.0	-4.83062	-1.59547	.00204	.80235

TABLE BIII. (Continued)

Energy Deposition (keV m^{-3}/source neutron)

SOURCE ENERGY 1.00E 01 - 1.20E 01 (MEV)

ANGLE (DEG)	A COEFFICIENT	B COEFFICIENT	C COEFFICIENT	CORRELATION COEFFICIENT
.0 - 1.0	15.22325	-4.76831	-.00367	.77188
1.0 - 2.0	7.55548	-3.09763	.00320	.88106
2.0 - 3.0	11.24074	-4.18928	-.00135	.89533
3.0 - 5.0	-.73153	-1.32553	.00517	.96756
5.0 - 7.0	-14.14404	1.29263	.00990	.94138
7.0 - 10.0	-19.77605	2.19758	.01062	.81116
10.0 - 15.0	-3.16623	-1.05150	.00432	.98929
15.0 - 20.0	-7.54673	-.26405	.00544	.98181
20.0 - 30.0	-8.01597	-.27914	.00515	.96555
30.0 - 40.0	-4.79952	-1.04448	.00343	.98303
40.0 - 50.0	-3.39648	-1.41113	.00257	.96956
50.0 - 60.0	-8.09801	-.43579	.00502	.94279
60.0 - 70.0	-8.98673	-.35186	.00469	.93092
70.0 - 80.0	-3.92501	-1.41586	.00284	.95931
80.0 - 90.0	-8.79718	-.41896	.00459	.88058
90.0 - 100.0	-25.59816	2.99889	.01205	.75052
100.0 - 120.0	-3.34499	-1.61056	.00276	.98192
120.0 - 140.0	-7.25489	-.80749	.00451	.98694
140.0 - 160.0	-6.04448	-1.14463	.00323	.94238
160.0 - 180.0	-21.83496	2.26553	.01128	.90403

SOURCE ENERGY 7.79E 00 - 1.00E 01 (MEV)

ANGLE (DEG)	A COEFFICIENT	B COEFFICIENT	C COEFFICIENT	CORRELATION COEFFICIENT
.0 - 1.0	-8.17096	.54770	.01209	.83264
1.0 - 2.0	6.86756	-2.83170	.00287	.83237
2.0 - 3.0	10.79589	-3.87160	-.00001	.88737
3.0 - 5.0	-2.97977	-1.07573	.00381	.82300
5.0 - 7.0	-12.26837	.54125	.00597	.77420
7.0 - 10.0	-9.56169	.07691	.00544	.91466
10.0 - 15.0	-6.39698	-.56225	.00437	.85755
15.0 - 20.0	-5.95642	-.73401	.00380	.88459
20.0 - 30.0	-9.63684	-.06228	.00504	.93467
30.0 - 40.0	-3.92455	-1.26127	.00295	.96241
40.0 - 50.0	-10.13829	-.14282	.00474	.69823
50.0 - 60.0	-12.66233	.33822	.00604	.95312
60.0 - 70.0	-26.11916	2.87833	.00997	.62362
70.0 - 80.0	-6.41470	-1.03369	.00285	.85602
80.0 - 90.0	-9.58632	-.43441	.00428	.89327
90.0 - 100.0	-6.03352	-1.06741	.00445	.98316
100.0 - 120.0	-7.30361	-.87201	.00426	.97981
120.0 - 140.0	-7.91261	-.85605	.00358	.86030
140.0 - 160.0	-5.51518	-1.30133	.00310	.89184
160.0 - 180.0	-19.39743	1.42806	.00894	.74439

TABLE BIII. (Continued)

Energy Deposition (keV m^{-3}/source neutron)

SOURCE ENERGY 6.07E 00 - 7.79E 00 (MEV)

ANGLE (DEG)	A COEFFICIENT	B COEFFICIENT	C COEFFICIENT	CORRELATION COEFFICIENT
.0 - 1.0	-3.45900	-.31823	.01446	.80771
1.0 - 2.0	6.83959	-3.03398	.00141	.70259
2.0 - 3.0	-3.07880	-2.13132	-.00024	.54957
3.0 - 5.0	-4.47054	-1.24705	.00283	.48911
5.0 - 7.0	.77737	-1.91803	.00306	.95204
7.0 - 10.0	-5.08988	-.90922	.00409	.79396
10.0 - 15.0	-1.06649	-1.74924	.00221	.92643
15.0 - 20.0	-3.39483	-1.37453	.00266	.94844
20.0 - 30.0	-3.38127	-1.39797	.00301	.98431
30.0 - 40.0	-11.99734	.24837	.00593	.90839
40.0 - 50.0	-14.82586	.80592	.00748	.85279
50.0 - 60.0	-6.57749	-1.01772	.00315	.95641
60.0 - 70.0	-12.75872	.14160	.00522	.90282
70.0 - 80.0	-6.40718	-1.06417	.00399	.96820
80.0 - 90.0	-6.85888	-1.04045	.00399	.94628
90.0 - 100.0	-15.05737	.47537	.00566	.80981
100.0 - 120.0	-8.16040	-.92280	.00339	.86607
120.0 - 140.0	-21.68275	1.96972	.01025	.79512
140.0 - 160.0	-13.03274	-.12624	.00460	.81856
160.0 - 180.0	-18.98087	.79591	.00514	.57583

SOURCE ENERGY 3.68E 00 - 6.07E 00 (MEV)

ANGLE (DEG)	A COEFFICIENT	B COEFFICIENT	C COEFFICIENT	CORRELATION COEFFICIENT
.0 - 1.0	6.14822	-3.45149	.00167	.67939
1.0 - 2.0	.62709	-2.79535	-.00051	.61237
2.0 - 3.0	9.20331	-4.41967	-.00318	.86928
3.0 - 5.0	-19.22043	1.30584	.00762	.72013
5.0 - 7.0	-6.44142	-1.12156	.00301	.71850
7.0 - 10.0	-15.66614	.83530	.00778	.75778
10.0 - 15.0	-8.13581	-.71248	.00416	.89514
15.0 - 20.0	-2.55695	-1.89721	.00187	.90027
20.0 - 30.0	-12.87175	.16231	.00559	.94897
30.0 - 40.0	-15.86309	.80629	.00731	.77048
40.0 - 50.0	-8.45208	-.99867	.00222	.88127
50.0 - 60.0	-10.48694	-.42336	.00447	.93735
60.0 - 70.0	-9.56655	-.68269	.00407	.91913
70.0 - 80.0	-8.21473	-1.16282	.00228	.91368
80.0 - 90.0	-5.49991	-1.63906	.00182	.92915
90.0 - 100.0	-20.97855	1.39247	.00720	.85063
100.0 - 120.0	-18.55608	.91033	.00680	.79364
120.0 - 140.0	-9.90320	-.83663	.00316	.88845
140.0 - 160.0	-10.36172	-.91269	.00223	.86920
160.0 - 180.0	-33.33015	3.47907	.00973	.65827

TABLE BIII. (Continued)

Energy Deposition (keV m^{-3}/source neutron)

SOURCE ENERGY 2.86E 00 - 3.68E 00 (MEV)

ANGLE (DEG)	A COEFFICIENT	B COEFFICIENT	C COEFFICIENT	CORRELATION COEFFICIENT
.0 - 1.0	29.44418	-8.73186	-.01118	.86613
1.0 - 2.0	15.35544	-6.39423	-.01041	.81849
2.0 - 3.0	2.22863	-3.11457	.00230	.81612
3.0 - 5.0	-7.96255	-1.11154	.00375	.72771
5.0 - 7.0	-19.32416	1.09344	.00706	.65827
7.0 - 10.0	-18.65715	.75207	.00428	.64814
10.0 - 15.0	-23.72998	1.92272	.00797	.67596
15.0 - 20.0	-5.63345	-1.96946	-.00093	.80693
20.0 - 30.0	-10.16302	-1.05772	.00044	.80831
30.0 - 40.0	-16.97334	.41602	.00375	.60722
40.0 - 50.0	-11.81569	-.52241	.00263	.93700
50.0 - 60.0	-18.14915	.62347	.00414	.76056
60.0 - 70.0	-10.76428	-.92206	.00114	.86933
70.0 - 80.0	-30.29732	3.02589	.00386	.78984
80.0 - 90.0	-12.10571	-.73431	.00110	.77016
90.0 - 100.0	-17.32938	.34123	.00342	.76265
100.0 - 120.0	-10.47910	-.92129	.00187	.95915
120.0 - 140.0	-31.17006	3.23569	.01002	.71477
140.0 - 160.0	-23.79617	1.67248	.00677	.84191
160.0 - 180.0	-33.73157	3.43422	.00906	.70187

SOURCE ENERGY 2.23E 00 - 2.86E 00 (MEV)

ANGLE (DEG)	A COEFFICIENT	B COEFFICIENT	C COEFFICIENT	CORRELATION COEFFICIENT
.0 - 1.0	4.46554	-3.41394	.00154	.75423
1.0 - 2.0	-26.10715	2.01078	.00943	.62817
2.0 - 3.0	30.94707	-8.62136	-.00862	.63069
3.0 - 5.0	8.69924	-4.89560	-.00393	.58920
5.0 - 7.0	-6.99344	-1.59564	.00013	.70622
7.0 - 10.0	-4.31962	-2.21224	-.00145	.67162
10.0 - 15.0	-7.30127	-1.57195	-.00027	.82312
15.0 - 20.0	-11.95261	-.59344	.00191	.63945
20.0 - 30.0	-17.46028	.52721	.00394	.74279
30.0 - 40.0	-18.43985	.61321	.00334	.57248
40.0 - 50.0	-20.89114	.93215	.00338	.47149
50.0 - 60.0	-22.83107	1.46835	.00523	.62435
60.0 - 70.0	-22.62778	1.41767	.00522	.50019
70.0 - 80.0	-20.51868	1.11556	.00547	.73707
80.0 - 90.0	-18.02844	.63665	.00473	.77136
90.0 - 100.0	-26.18655	2.16229	.00707	.71273
100.0 - 120.0	-17.80824	.41020	.00346	.62501
120.0 - 140.0	-24.89124	1.95686	.00720	.89126
140.0 - 160.0	-27.19414	2.35454	.00791	.77199
160.0 - 180.0	-17.92450	.16905	.00207	.32494

TABLE BIII. (Continued)

Energy Deposition (keV m^{-3}/source neutron)

SOURCE ENERGY 1.74E 00 - 2.23E 00 (MEV)

ANGLE (DEG)	A COEFFICIENT	B COEFFICIENT	C COEFFICIENT	CORRELATION COEFFICIENT
.0 - 1.0	4.46554	-3.41394	.00154	.75423
1.0 - 2.0	-26.10715	2.01078	.00943	.62817
2.0 - 3.0	-3.54559	-3.24033	-.00759	.66373
3.0 - 5.0	-2.92374	-3.03448	-.00374	.40791
5.0 - 7.0	-41.65070	4.39700	.00690	.60679
7.0 - 10.0	-29.71843	2.54439	.00509	.40123
10.0 - 15.0	-20.84123	1.09024	.00402	.51257
15.0 - 20.0	-48.16158	6.29468	.01207	.78057
20.0 - 30.0	-26.63837	2.26709	.00660	.77262
30.0 - 40.0	-24.67165	1.96197	.00647	.82481
40.0 - 50.0	-21.87308	1.35033	.00507	.65999
50.0 - 60.0	-23.15964	1.69286	.00636	.73197
60.0 - 70.0	-28.66045	2.85581	.00898	.59640
70.0 - 80.0	-24.26447	1.95705	.00753	.79854
80.0 - 90.0	-21.60052	1.39659	.00621	.77317
90.0 - 100.0	-20.38554	1.11604	.00549	.62269
100.0 - 120.0	-19.29689	.90587	.00542	.69866
120.0 - 140.0	-33.73405	3.63645	.00954	.85936
140.0 - 160.0	-25.12605	1.98834	.00710	.77178
160.0 - 180.0	-40.82001	4.85590	.01121	.71991

SOURCE ENERGY 1.35E 00 - 1.74E 00 (MEV)

ANGLE (DEG)	A COEFFICIENT	B COEFFICIENT	C COEFFICIENT	CORRELATION COEFFICIENT
.0 - 1.0	4.46554	-3.41394	.00154	.75423
1.0 - 2.0	-28.17532	2.37616	.00753	.37809
2.0 - 3.0	-3.54559	-3.24033	-.00759	.66373
3.0 - 5.0	-24.20787	.96599	.00031	.22408
5.0 - 7.0	-31.74347	3.02637	.00697	.39126
7.0 - 10.0	-41.15851	4.94964	.01013	.73399
10.0 - 15.0	-25.68736	1.91980	.00506	.36987
15.0 - 20.0	-31.56284	3.00008	.00638	.75661
20.0 - 30.0	-19.82060	.90094	.00379	.41399
30.0 - 40.0	-31.66020	3.18720	.00764	.87511
40.0 - 50.0	-29.88472	3.03579	.00866	.86149
50.0 - 60.0	-27.85117	2.54020	.00747	.73386
60.0 - 70.0	-25.62070	2.06359	.00648	.63700
70.0 - 80.0	-29.67366	2.97114	.00879	.87826
80.0 - 90.0	-27.43690	2.38506	.00685	.70325
90.0 - 100.0	-29.81731	2.96799	.00891	.63731
100.0 - 120.0	-36.39114	4.29071	.01141	.79383
120.0 - 140.0	-27.96132	2.67195	.00896	.89382
140.0 - 160.0	-15.12101	.04596	.00372	.78589
160.0 - 180.0	-29.81598	2.84239	.00876	.64312

TABLE BIII. (Continued)

Energy Deposition (keV m^{-3}/source neutron)

SOURCE ENERGY 8.23E-01 - 1.35E 00 (MEV)

ANGLE (DEG)	A COEFFICIENT	B COEFFICIENT	C COEFFICIENT	CORRELATION COEFFICIENT
.0 - 1.0	4.46554	-3.41394	.00154	.75423
1.0 - 2.0	-28.17532	2.37616	.00753	.37809
2.0 - 3.0	-22.13576	1.09621	.00349	.57486
3.0 - 5.0	-21.40623	.60074	-.00069	.31964
5.0 - 7.0	-37.63358	4.22060	.00946	.47206
7.0 - 10.0	-21.82706	1.34535	.00545	.63393
10.0 - 15.0	-30.16907	3.13810	.00963	.76154
15.0 - 20.0	-16.77814	.36677	.00371	.52847
20.0 - 30.0	-30.83749	3.11984	.00793	.47876
30.0 - 40.0	-23.42879	1.67592	.00551	.54119
40.0 - 50.0	-24.60034	1.97868	.00670	.69992
50.0 - 60.0	-24.13455	1.92711	.00689	.80062
60.0 - 70.0	-28.89185	2.89925	.00895	.74856
70.0 - 80.0	-24.52106	2.03788	.00751	.68580
80.0 - 90.0	-29.47966	2.94109	.00880	.83245
90.0 - 100.0	-22.99457	1.69457	.00667	.76825
100.0 - 120.0	-19.63179	1.10521	.00631	.86189
120.0 - 140.0	-19.25984	.92028	.00557	.91289
140.0 - 160.0	-12.03422	-.55204	.00247	.66136
160.0 - 180.0	-32.14824	3.22826	.00832	.50046

SOURCE ENERGY 5.00E-01 - 8.23E-01 (MEV)

ANGLE (DEG)	A COEFFICIENT	B COEFFICIENT	C COEFFICIENT	CORRELATION COEFFICIENT
.0 - 1.0	4.46554	-3.41394	.00154	.75423
1.0 - 2.0	-34.50897	2.73052	.00188	.60890
2.0 - 3.0	-27.07457	2.54396	.01071	.70479
3.0 - 5.0	-98.20851	15.59061	.02803	.90735
5.0 - 7.0	-13.69677	-.37769	.00133	.25354
7.0 - 10.0	-62.70663	8.85714	.01515	.83138
10.0 - 15.0	-22.10934	1.24549	.00376	.32692
15.0 - 20.0	-40.20674	5.16198	.01273	.77899
20.0 - 30.0	-24.73386	1.93884	.00642	.51583
30.0 - 40.0	-29.77634	2.99811	.00880	.73289
40.0 - 50.0	-27.45418	2.65436	.00855	.72588
50.0 - 60.0	-16.94618	.51874	.00452	.60666
60.0 - 70.0	-14.95028	.17257	.00422	.83234
70.0 - 80.0	-23.32523	1.93274	.00810	.85439
80.0 - 90.0	-22.20171	1.58069	.00688	.48866
90.0 - 100.0	-19.32802	1.06988	.00631	.92922
100.0 - 120.0	-23.06557	1.82226	.00794	.83396
120.0 - 140.0	-18.81754	.96024	.00629	.96198
140.0 - 160.0	-25.27235	2.21116	.00879	.83218
160.0 - 180.0	-8.89604	-1.36177	.00006	.61403

TABLE BIII. (Continued)

Energy Deposition (keV m^{-3}/source neutron)

SOURCE ENERGY 3.03E-01 - 5.00E-01 (MEV)

ANGLE (DEG)	A COEFFICIENT	B COEFFICIENT	C COEFFICIENT	CORRELATION COEFFICIENT
.0 - 1.0	4.46554	-3.41394	.00154	.75423
1.0 - 2.0	-34.50897	2.73052	.00188	.60890
2.0 - 3.0	#########	15.90916	.02707	.68732
3.0 - 5.0	-27.53011	2.30284	.00704	.64065
5.0 - 7.0	-12.78729	-.25727	.00317	.59034
7.0 - 10.0	-43.71947	5.75677	.01458	.86055
10.0 - 15.0	-31.83612	3.41333	.00981	.83642
15.0 - 20.0	-18.72096	.87962	.00581	.66995
20.0 - 30.0	-11.82998	-.41235	.00320	.71984
30.0 - 40.0	-33.01544	3.88250	.01166	.79221
40.0 - 50.0	-23.27522	1.97802	.00854	.74813
50.0 - 60.0	-20.26778	1.23339	.00659	.64112
60.0 - 70.0	-13.21315	.00448	.00498	.93069
70.0 - 80.0	-20.19963	1.34345	.00760	.88939
80.0 - 90.0	-20.95857	1.43448	.00708	.77929
90.0 - 100.0	-21.90898	1.64558	.00779	.94269
100.0 - 120.0	-24.90311	2.34146	.00999	.94604
120.0 - 140.0	-26.08461	2.49932	.00980	.72445
140.0 - 160.0	-22.65967	1.75272	.00789	.90953
160.0 - 180.0	-25.98244	2.44616	.00892	.70073

SOURCE ENERGY 1.84E-01 - 3.03E-01 (MEV)

ANGLE (DEG)	A COEFFICIENT	B COEFFICIENT	C COEFFICIENT	CORRELATION COEFFICIENT
.0 - 1.0	4.46554	-3.41394	.00154	.75423
1.0 - 2.0	-61.19792	9.20379	.01998	.71429
2.0 - 3.0	-41.57230	5.90655	.02465	.82560
3.0 - 5.0	-21.65240	1.77401	.01459	.74486
5.0 - 7.0	-17.20084	1.58608	.01846	.92466
7.0 - 10.0	-24.55721	2.07751	.00867	.74105
10.0 - 15.0	-38.36430	4.93221	.01409	.88943
15.0 - 20.0	-27.50607	2.67159	.00886	.69062
20.0 - 30.0	-30.46304	3.38628	.01071	.89729
30.0 - 40.0	-37.64941	4.70063	.01293	.78550
40.0 - 50.0	-30.96471	3.46885	.01086	.91807
50.0 - 60.0	-23.81146	2.10390	.00875	.85584
60.0 - 70.0	-22.97946	1.90830	.00855	.95311
70.0 - 80.0	-18.81827	.99160	.00625	.75803
80.0 - 90.0	-14.44563	.27904	.00628	.98223
90.0 - 100.0	-12.77850	-.13036	.00480	.95394
100.0 - 120.0	-12.22890	-.20264	.00481	.98652
120.0 - 140.0	-18.55672	.98525	.00671	.89802
140.0 - 160.0	-22.70496	1.70315	.00775	.73146
160.0 - 180.0	-28.08653	2.63827	.00872	.73659

TABLE BIII. (Continued)

Energy Deposition (keV m^{-3}/source neutron)

SOURCE ENERGY 6.76E-02 - 1.84E-01 (MEV)

ANGLE (DEG)	A COEFFICIENT	B COEFFICIENT	C COEFFICIENT	CORRELATION COEFFICIENT
.0 - 1.0	4.46554	-3.41394	.00154	.75423
1.0 - 2.0	-61.19792	9.20379	.01998	.71429
2.0 - 3.0	-86.01190	13.03695	.02246	.73926
3.0 - 5.0	-47.32278	5.74001	.01099	.39280
5.0 - 7.0	-21.06335	1.16398	.00610	.61696
7.0 - 10.0	-42.29265	5.89385	.01805	.93141
10.0 - 15.0	-37.31929	4.62258	.01337	.91760
15.0 - 20.0	-38.10509	4.85130	.01386	.84768
20.0 - 30.0	-31.22289	3.58961	.01153	.89115
30.0 - 40.0	-46.40845	6.57670	.01732	.77016
40.0 - 50.0	-16.05611	.59832	.00619	.94083
50.0 - 60.0	-24.82520	2.33927	.00961	.90365
60.0 - 70.0	-26.10579	2.64557	.01011	.79953
70.0 - 80.0	-23.99556	2.21436	.00953	.73155
80.0 - 90.0	-22.11258	1.64444	.00729	.82416
90.0 - 100.0	-22.86324	1.94246	.00901	.81713
100.0 - 120.0	-20.34341	1.41454	.00794	.95364
120.0 - 140.0	-20.80930	1.56408	.00882	.92786
140.0 - 160.0	-20.46495	1.40048	.00816	.83716
160.0 - 180.0	-20.64233	1.46568	.00905	.87600

SOURCE ENERGY 2.48E-02 - 6.76E-02 (MEV)

ANGLE (DEG)	A COEFFICIENT	B COEFFICIENT	C COEFFICIENT	CORRELATION COEFFICIENT
.0 - 1.0	4.46554	-3.41394	.00154	.75423
1.0 - 2.0	.00000	.00000	.00000	.00000
2.0 - 3.0	-21.98152	1.53361	.01015	.94054
3.0 - 5.0	-4.65197	-1.63424	.00485	.76321
5.0 - 7.0	-5.47458	-1.71742	.00275	.68273
7.0 - 10.0	-7.16936	-1.01734	.00487	.83584
10.0 - 15.0	-11.93536	-.35143	.00418	.74316
15.0 - 20.0	-21.93401	1.58056	.00723	.69988
20.0 - 30.0	-23.50273	2.12444	.01012	.88780
30.0 - 40.0	-11.53024	-.25824	.00503	.87656
40.0 - 50.0	-17.18474	.85596	.00679	.97381
50.0 - 60.0	-17.09656	.75681	.00635	.83224
60.0 - 70.0	-31.34081	3.63002	.01220	.85426
70.0 - 80.0	-26.75693	2.72692	.01042	.84056
80.0 - 90.0	-10.46989	-.52063	.00443	.96651
90.0 - 100.0	-18.72450	1.17162	.00814	.95559
100.0 - 120.0	-13.94516	.21220	.00619	.98278
120.0 - 140.0	-20.88278	1.51412	.00803	.92861
140.0 - 160.0	-15.43890	.42391	.00602	.93404
160.0 - 180.0	-22.91200	1.83549	.00913	.92385

TABLE BIII. (Continued)

Energy Deposition (keV m^{-3}/source neutron)

SOURCE ENERGY 9.12E-03 - 2.48E-02 (MEV)

ANGLE (DEG)	A COEFFICIENT	B COEFFICIENT	C COEFFICIENT	CORRELATION COEFFICIENT
.0 - 1.0	4.46554	-3.41394	.00154	.75423
1.0 - 2.0	.00000	.00000	.00000	.00000
2.0 - 3.0	20.65964	-6.56056	-.00371	.73566
3.0 - 5.0	-20.86427	1.08827	.00581	.53886
5.0 - 7.0	23.66550	-7.52646	-.00913	.55210
7.0 - 10.0	-12.58731	.15974	.00782	.93191
10.0 - 15.0	-6.37105	-1.18181	.00500	.93467
15.0 - 20.0	-21.93141	1.52125	.00751	.70395
20.0 - 30.0	-16.83829	.76508	.00695	.79805
30.0 - 40.0	-10.31653	-.42058	.00539	.98243
40.0 - 50.0	-15.79934	.53117	.00607	.86859
50.0 - 60.0	-18.81157	1.24799	.00845	.91156
60.0 - 70.0	-18.31667	1.13757	.00793	.87009
70.0 - 80.0	-21.11227	1.66876	.00902	.87775
80.0 - 90.0	-15.56521	.53980	.00643	.95450
90.0 - 100.0	-16.19551	.54912	.00584	.94873
100.0 - 120.0	-10.98364	-.43866	.00454	.96494
120.0 - 140.0	-10.71503	-.43256	.00493	.97866
140.0 - 160.0	-14.92907	.37117	.00668	.91328
160.0 - 180.0	-25.37582	2.57116	.01275	.89385

SOURCE ENERGY 3.35E-03 - 9.12E-03 (MEV)

ANGLE (DEG)	A COEFFICIENT	B COEFFICIENT	C COEFFICIENT	CORRELATION COEFFICIENT
.0 - 1.0	.00000	.00000	.00000	.00000
1.0 - 2.0	.00000	.00000	.00000	.00000
2.0 - 3.0	9.50574	-5.67868	-.01435	.29503
3.0 - 5.0	-19.17706	.61687	.00397	.22689
5.0 - 7.0	7.78242	-4.50800	-.00345	.80169
7.0 - 10.0	-20.44333	1.01590	.00580	.67875
10.0 - 15.0	-19.05994	.86853	.00478	.49603
15.0 - 20.0	-41.36818	5.41337	.01459	.79698
20.0 - 30.0	-31.18539	3.62249	.01237	.73343
30.0 - 40.0	-17.69029	.96547	.00733	.86584
40.0 - 50.0	-13.45643	.10750	.00603	.92201
50.0 - 60.0	-16.30634	.77890	.00779	.88445
60.0 - 70.0	-14.59481	.37573	.00649	.95312
70.0 - 80.0	-13.67910	.19805	.00625	.95729
80.0 - 90.0	-11.17625	-.27155	.00569	.98939
90.0 - 100.0	-11.32698	-.31458	.00508	.95759
100.0 - 120.0	-22.56802	2.09183	.01072	.81686
120.0 - 140.0	-18.81409	1.26400	.00899	.92119
140.0 - 160.0	-22.50847	1.98485	.00983	.82379
160.0 - 180.0	-9.47987	-.80493	.00393	.83288

TABLE BIII. (Continued)

Energy Deposition (keV m^{-3}/source neutron)

SOURCE ENERGY 1.00E-03 - 3.35E-03 (MEV)

ANGLE (DEG)	A COEFFICIENT	B COEFFICIENT	C COEFFICIENT	CORRELATION COEFFICIENT
.0 - 1.0	.00000	.00000	.00000	.00000
1.0 - 2.0	.00000	.00000	.00000	.00000
2.0 - 3.0	60.53656	-13.55165	-.01036	.96338
3.0 - 5.0	-34.31738	3.77088	.00997	.60126
5.0 - 7.0	-1.86019	-2.53350	.00062	.67299
7.0 - 10.0	-41.77502	5.33335	.01470	.63014
10.0 - 15.0	-19.09186	1.11117	.00747	.83735
15.0 - 20.0	-29.75911	3.32322	.01309	.93059
20.0 - 30.0	-13.43199	.05162	.00540	.86176
30.0 - 40.0	-15.63466	.68455	.00819	.96700
40.0 - 50.0	-17.98080	1.03363	.00757	.92100
50.0 - 60.0	-20.31837	1.69077	.01011	.79859
60.0 - 70.0	-13.07743	.08307	.00580	.97395
70.0 - 80.0	-24.37440	2.38223	.01090	.76151
80.0 - 90.0	-10.52716	-.37133	.00568	.98533
90.0 - 100.0	-15.56141	.60683	.00763	.97096
100.0 - 120.0	-14.58447	.40398	.00714	.93692
120.0 - 140.0	-13.11725	.04665	.00585	.96889
140.0 - 160.0	-15.61076	.59656	.00774	.92894
160.0 - 180.0	-30.17975	3.26878	.01060	.70183

APPENDIX C: LISTING OF THE SKYSHINE-II SOURCE DECK

```
      PROGRAM SKYSHN(INPUT,OUTPUT,TAPE5=INPUT,TAPE6=OUTPUT,
     .               DEBUG=OUTPUT,TAPE8)
      COMMON /AIRD/  NTHE,NATE(3),ABET(21),ATE(20,3),ATD(3,20,19)
      COMMON /ISCLR/ IPBLDG,IREFLC,ISUM,IY,NDET,NES,NEXT,NGRP,NHIST,
     .               NHISTA,NHISTE,NIPT,NOUT,NPG,NTYPE,NUSOR
      COMMON /RARAY/ C(6),COMENT(20,3),COMP(15),ENGY(16),FTD(16),
     .               PSDAT(11,100),RHO(15),SDR(5),SDRS(5),SIGMA(16),
     .               XD(5),YD(5),ZD(5)
      COMMON /RSCLR/ ABP,AMODI,ARHO,AXIS,CALPH,CBETA,CF,CGAM,CONST,
     .               DLONG,GMU,GMUS,SMEV,SMVAL,SWP,TM,UIST,UP,VP,WATE,
     .               WEIGHT,WP,YEAR
      DATA           AMODI/1.0/
C
      CALL ERRSET(208,256,-1,1)
      READ (8,8000)  NTYPE
      READ (8,5000)  (COMENT(I,2),I=1,20)
      IF (NTYPE.NE.1) READ(8,8010) ATD
      IF (NTYPE.EQ.1) READ(8,8010) (((ATD(I,J,K),I=1,3),J=1,20),K=1,12)
      READ (5,5000)  (COMENT(I,1),I=1,20)
      READ (5,5010)  ARHO
      IF (ARHO.EQ.1.225E-3)  GO TO 100
      AMODI = 1.225E-3 / ARHO
  100 CONTINUE
      CALL MAIN1
      CALL MAIN2,RETURNS(100)
      STOP
C
 5000 FORMAT (20A4)
 5010 FORMAT (E10.0)
 8000 FORMAT (I10)
 8010 FORMAT (10X,6F10.5,10X)
      END
```

Fig. C1. SKYSHINE-II Source Deck Listing

```
      SUBROUTINE MAIN1
      COMMON / ANSN/ NWT,WT(15),MAT(15),NHL(6),NVL(6),HL(3,6),VL(3,6),
     .               MAH(9,6)
      COMMON /SPECT/ CPDEG(20),EG(20),SPECN(20),SPECK(20),SOURN,SOURK,
     .               NEG,IBIAS,NEG1,NEG2
      COMMON /IARAY/ IFT(15),INCH(15)
      COMMON /ISCLR/ IPBLDG,IREFLC,ISUM,IY,NDET,NES,NEXT,NGRP,NHIST,
     .               NHISTA,NHISTE,NIPT,NOUT,NPG,NTYPE,NUSOR
      COMMON /RARAY/ C(6),COMENT(20,3),COMP(15),ENGY(16),FTD(16),
     .               PSDAT(11,100),RHO(15),SDR(5),SDRS(5),SIGMA(16),
     .               XD(5),YD(5),ZD(5)
      COMMON /RSCLR/ ABP,AMODI,ARHO,AXIS,CALPH,CBETA,CF,CGAM,CONST,
     .               DLONG,GMU,GMUS,SMEV,SMVAL,SWP,TM,UIST,UP,VP,WATE,
     .               WEIGHT,WP,YEAR
      DIMENSION      WCOMP(3)
      DATA           WCOMP/4HCONC,5HSTEEL,1H /
C
      READ (NIPT,5000)  NWT
      READ (NIPT,5010)  (WT(I),I=1,NWT)
      READ (NIPT,5000)  (MAT(I),I=1,NWT)
C
      DO 20 NB=1,6
      READ (NIPT,5020)  LH,(HL(I,NB),I=1,LH)
      READ (NIPT,5020)  LV,(VL(I,NB),I=1,LV)
      NHL(NB) = LH
      NVL(NB) = LV
      MAX     = LH*LV
      READ (NIPT,5000)  (MAH(I,NB),I=1,MAX)
   20 CONTINUE
C
      READ (NIPT,5010)  C
      READ (NIPT,5000)  IYP
      IF (IYP.NE.0)     IY = IYP
C
      DO 60 I=1,NWT
      K       = MAT(I)
      COMP(I) = WCOMP(K)
      IFT(I)  = IFIX(WT(I))
      VALUE   = ( WT(I) - FLOAT( IFT(I) )) * 12.0
      INCH(I) = IFIX(VALUE)
      WT(I)   = WT(I) * CF
   60 CONTINUE
C
      ENTRY EMAIN1
      READ (NIPT,5030)  (COMENT(I,3),I=1,20)
      READ (NIPT,5000)  NHISTA,NHISTE,NEXT,ISUM,IREFLC,IPREC,IPBLDG
      IF (IPREC.EQ.1)   GO TO 80
      READ (NIPT,5000)  NDET
      IF (NDET.GT.5)    NDET = 5
      READ (NIPT,5040)  ((XD(K),YD(K),ZD(K)),K=1,NDET)
   80 READ (NIPT,5000)  NEG,IBIAS
      READ (NIPT,5010)  (EG(I),I=1,NEG)
      READ (NIPT,5010)  (CPDEG(I),I=1,NEG)
      IF (IBIAS.EQ.0)   GO TO 100
      READ (NIPT,5010)  (SPECN(I),I=1,NEG)
      READ (NIPT,5010)  (SPECK(I),I=1,NEG)
100   READ (NIPT,5010)  SOURN,SOURK
```

```
C
      READ (NIPT,5000)  NUSOR
      DO 120 I=1,NUSOR
      READ (NIPT,5010)  (PSDAT(J,I),J=1,5)
120   READ (NIPT,5010)  (PSDAT(J,I),J=6,11)
C
      NHIST = NHISTE * NHISTA
      NPG   = NHIST / NGRP
      RETURN
C
5000  FORMAT (8I10)
5010  FORMAT (8E10.0)
5020  FORMAT (I10,3E10.0)
5030  FORMAT (20A4)
5040  FORMAT (3E10.0)
      END
```

```
      SUBROUTINE AIRT(CBET,DIST,AT,E)
      COMMON /AIRD/  NTHE,NATE(3),ABET(21),ATE(20,3),ATD(3,20,19)
      COMMON /ISCLR/ IPBLDG,IREFLC,ISUM,IY,NDET,NES,NEXT,NGRP,NHIST,
     .               NHISTA,NHISTE,NIPT,NOUT,NPG,NTYPE,NUSOR
      COMMON /RSCLR/ ABP,AMODI,ARHO,AXIS,CALPH,CBETA,CF,CGAM,CONST,
     .               DLONG,GMU,GMUS,SMEV,SMVAL,SWP,TM,UIST,UP,VP,WATE,
     .               WEIGHT,WP,YEAR
C
      D     = DIST * .3048
      BET   = ATAN2(SQRT(1.0-CBET**2),CBET) * 57.295779
      DO 20 I=2,NTHE
      IF (BET.LT.ABET(I))  GO TO 30
   20 CONTINUE
      I     = NTHE
   30 IA    = I-1
      M     = NATE(NTYPE)
      DO 60 I = 2,M
      IF (E .GE. ATE(I,NTYPE)) GO TO 70
   60 CONTINUE
      I     = M
   70 IE    = I-1
      IF (AMODI.EQ.1.0)  GO TO 90
      D     = D / AMODI
90    AT    = 4.70822E-11 * EXP(ATD(1,IA,IE)) * D ** (ATD(2,IA,IE)) *
     .        EXP(-D*ATD(3,IA,IE)) / AMODI**2
      IF (NTYPE .EQ. 1) AT = AT * E * 1000
      RETURN
      END
```

```
      SUBROUTINE DEV
      COMMON /ARAYS/ SCATR(450),SREFL(5,6,3),DREFL(5,3)
      COMMON /ISCLR/ IPBLDG,IREFLC,ISUM,IY,NDET,NES,NEXT,NGRP,NHIST,
     .               NHISTA,NHISTE,NIPT,NOUT,NPG,NTYPE,NUSOR
      COMMON /RARAY/ C(6),COMENT(20,3),COMP(15),ENGY(16),FTD(16),
     .               PSDAT(11,100),RHO(15),SDR(5),SDRS(5),SIGMA(16),
     .               XD(5),YD(5),ZD(5)
C
C        IN FOUR DIMENSIONS SCATR(450) WOULD BE SCATR(5,5,3,6)
C
      INDEX(I1,I2,I3,I4) = I1 + 5 * (I2-1 + 5 * (I3-1 + 3 * (I4-1)))
C
      FGRP  = NGRP * NUSOR
      FGR   = 1.0 / (FGRP-1.0) / FGRP
      FGRP  = 1.0 / FGRP
C
      DO 100 I = 1,NDET
      IF (DREFL(I,2) .EQ. 0.0) GO TO 20
      DREFL(I,1) = DREFL(I,2) * FGRP
      DREFL(I,3) = FGR * (DREFL(I,3) - FGRP * DREFL(I,2) ** 2)
      IF (DREFL(I,3) .LT. 0.0) WRITE (6,6000) DREFL(I,3),DREFL(I,2)
      IF (DREFL(I,3) .LT. 0.0) DREFL(I,3) = 0.0
      DREFL(I,2) = SQRT(DREFL(I,3)) / DREFL(I,1) * 100.0
      DREFL(I,1) = DREFL(I,1) * NUSOR
C
20    DO 80 K = 1,6
      IF (SREFL(I,K,2) .EQ. 0.0) GO TO 40
      SREFL(I,K,1) = SREFL(I,K,2) * FGRP
      SREFL(I,K,3) = FGR * (SREFL(I,K,3) - FGRP * SREFL(I,K,2) ** 2)
      IF (SREFL(I,K,3) .LT. 0.0) WRITE(6,6000) SREFL(I,K,3),SREFL(I,K,2)
      IF (SREFL(I,K,3) .LT. 0.0) SREFL(I,K,3) = 0.0
      SREFL(I,K,2) = SQRT(SREFL(I,K,3)) / SREFL(I,K,1) * 100.0
      SREFL(I,K,1) = SREFL(I,K,1) * NUSOR
C
40    DO 80 J = 1,5
      INDX1 = INDEX(I,J,1,K)
      INDX2 = INDEX(I,J,2,K)
      INDX3 = INDEX(I,J,3,K)
      IF (SCATR(INDX2) .EQ. 0.0) GO TO 80
      SCATR(INDX1) = SCATR(INDX2) * FGRP
      SCATR(INDX3) = FGR * (SCATR(INDX3) - FGRP * SCATR(INDX2) ** 2)
      IF (SCATR(INDX3) .LT. 0.0) WRITE(6,6000) SCATR(INDX3),SCATR(INDX2)
      IF (SCATR(INDX3) .LT. 0.0) SCATR(INDX3) = 0.0
      SCATR(INDX2) = SQRT(SCATR(INDX3)) / SCATR(INDX1) * 100.0
      SCATR(INDX1) = SCATR(INDX1) * NUSOR
80    CONTINUE
      IF (SDR(I) .EQ. 0.0) GO TO 100
      SDR(I) = SDR(I) * FGRP
      SDRS(I) = FGR * (SDRS(I) - SDR(I) ** 2 / FGRP)
      SDR(I) = SQRT(SDRS(I)) / SDR(I) * 100.0
100   CONTINUE
      RETURN
C
6000  FORMAT (1X,2E16.8)
      END
```

```
      SUBROUTINE GEOM(X,Y,Z,ALP,BET,GAM,NB,NT,IJ,DIST)
      DIMENSION D(6)
      COMMON /RARAY/ C(6),COMENT(20,3),COMP(15),ENGY(16),FTD(16),
     .               PSDAT(11,100),RHO(15),SDR(5),SDRS(5),SIGMA(16),
     .               XD(5),YD(5),ZD(5)
      COMMON /RSCLR/ ABP,AMODI,ARHO,AXIS,CALPH,CBETA,CF,CGAM,CONST,
     .               DLONG,GMU,GMUS,SMEV,SMVAL,SWP,TM,UIST,UP,VP,WATE,
     .               WEIGHT,WP,YEAR
      COMMON /ANSN/ NWT, WT(15), MAT(15), NHL(6), NVL(6), HL(3,6),
     1 VL(3,6), MAH(9,6)
      DO 10 I=1,6
      D(I)=DLONG
   10 CONTINUE
      IF(ABS(ALP).LT.SMVAL)GO TO 20
      D(1)=(C(1)-X)/ALP
      D(2)=(C(2)-X)/ALP
   20 IF(ABS(BET).LT.SMVAL)GO TO 30
      D(3)=(C(3)-Y)/BET
      D(4)=(C(4)-Y)/BET
   30 IF(ABS(GAM).LT.SMVAL)GO TO 40
      D(5)=(C(5)-Z)/GAM
      D(6)=(C(6)-Z)/GAM
   40 DIST=DLONG
      NB=0
      DO 50 I=1,6
      IF(D(I).LE.SMVAL) GO TO 50
      IF(D(I).GT.DIST)GO TO 50
      DIST=D(I)
      NB=I
   50 CONTINUE
      XP = X + ALP*DIST - C(1)
      YP = Y + BET*DIST - C(3)
      ZP = Z + GAM*DIST - C(5)
      GO TO (110, 110, 120, 120, 130, 130), NB
  110 HI = ZP
      WD = YP
      GO TO 140
  120 HI = ZP
      WD = XP
      GO TO 140
  130 HI = YP
      WD = XP
  140 MAX = NHL(NB)
      DO 150 I =1,MAX
      IF (HL(I,NB).GE.HI) GO TO 160
  150 CONTINUE
      STOP47661
  160 MAC = NVL(NB)
      DO 170 J=1,MAC
      IF (VL(J,NB).GE.WD) GO TO 180
  170 CONTINUE
      STOP47662
  180 IJ = I + (J-1)*MAX
      NT = MAH(IJ,NB)
      RETURN
      END
```

```
      SUBROUTINE GEOMED(WALL)
C        GEOMETRY INPUT DATA EDIT
      REALWALL(6)
      COMMON /ANSN/ NWT, WT(15), MAT(15), NHL(6), NVL(6), HL(3,6),
     1 VL(3,6), MAH(9,6)
      DIMENSION IHL(4)
      DATA IHL/'----','----','----','--  '/
      DATA IVL/':   '/
      NOUT=6
      WRITE(NOUT,80)
   80 FORMAT(1H0,48X,'*** PROBLEM GEOMETRY***'//)
      DO 95 K=1,2
      K2 = K + 2
      K3 = K + 4
      NHL1 = NHL(K)
      NHL2 = NHL(K2)
      NHL3 = NHL(K3)
      NHL11 = NHL1 + 1
      NHL21 = NHL2 + 1
      NHL31 = NHL3 + 1
      NHLM1 = NHL1 - 1
      NHLM2 = NHL2 - 1
      NHLM3 = NHL3 - 1
      NVL1 = NVL(K) - 1
      NVL2 = NVL(K2) - 1
      NVL3 = NVL(K3) - 1
      WRITE(NOUT,83)(HL(I,K ),I=1,NHL1)
   83 FORMAT(1H ,3(3X,F10.3,':'))
      WRITE(NOUT,84)(HL(I,K2),I=1,NHL2)
   84 FORMAT(1H+,T45,3(3X,F10.3,':'))
      WRITE(NOUT,85)(HL(I,K3),I=1,NHL3)
   85 FORMAT(1H+,T88,3(3X,F10.3,':'))
      WRITE(NOUT,87)
   87 FORMAT(1H )
      WRITE(NOUT,106) (IVL,I=1,NHL1)
  106 FORMAT(1H+,   3(13X,A1))
      WRITE(NOUT,107) (IVL,I=1,NHL2)
  107 FORMAT(1H+,T45,   3(13X,A1))
      WRITE(NOUT,108) (IVL,I=1,NHL3)
  108 FORMAT(1H+,T88,   3(13X,A1))
      DO 94 LL = 1,3
      IF(LL.GT.NVL(K).AND.LL.GT.NVL(K2).AND.LL.GT.NVL(K3))GO TO 94
      IF(LL.EQ.1) WRITE(NOUT,87)
      LLP = NVL1 + 2 - LL
      IF(LL.LE.NVL(K))
     *WRITE(NOUT,93) VL(LLP,K )
   93 FORMAT(1H+,F10.3,'----')
      IF(NHLM1.GT.0.AND.LL.LE.NVL(K )) WRITE(NOUT,101)(IHL,I=1,NHLM1)
  101 FORMAT(1H+,T16,2(3A4,A2))
      LLP = NVL2 + 2 - LL
      IF(LL.LE.NVL(K2))
     *WRITE(NOUT,99) VL(LLP,K2)
   99 FORMAT(1H+,T45,F10.3,'----')
      IF(NHLM2.GT.0.AND.LL.LE.NVL(K2)) WRITE(NOUT,102)(IHL,I=1,NHLM2)
  102 FORMAT(1H+,T59,2(3A4,A2))
      LLP = NVL3 + 2 - LL
      IF(LL.LE.NVL(K3))
```

```
     *WRITE(NOUT,100)VL(LLP,K3)
  100 FORMAT(1H+,T88,F10.3,'----')
      IF(NHLM3.GT.0.AND.LL.LE.NVL(K3)) WRITE(NOUT,103)(IHL,I=1,NHLM3)
  103 FORMAT(1H+,T102,2(3A4,A2))
      WRITE(NOUT,87)
      IF(LL.LE.NVL(K))
     *WRITE(NOUT,90) (IVL,I=1,NHL11)
   90 FORMAT(1H+,A4,9X,2(A4,10X),A1)
      IF(LL.LE.NVL(K2))
     *WRITE(NOUT,91) (IVL,I=1,NHL21)
   91 FORMAT(1H+,T45,A4,9X,2(A4,10X),A1)
      IF(LL.LE.NVL(K3))
     *WRITE(NOUT,92) (IVL,I=1,NHL31)
   92 FORMAT(1H+,T88,A4,9X,2(A4,10X),A1)
      WRITE(NOUT,87)
      ILL = NHL(K )*(NVL(K ) - LL) + 1
      IUL = NHL(K )*(NVL(K ) - LL + 1)
      IF(LL.LE.NVL(K ))WRITE(NOUT,81)(MAH(I,K ),IVL,I=ILL,IUL)
   81 FORMAT(1H+,':',4X,I2,6X,A1,2(4X,I2,7X,A1))
      ILL = NHL(K2)*(NVL(K2) - LL) + 1
      IUL = NHL(K2)*(NVL(K2) - LL + 1)
      IF(LL.LE.NVL(K2))WRITE(NOUT,82)(MAH(I,K2),IVL,I=ILL,IUL)
   82 FORMAT(1H+,T45,':',4X,I2,6X,A1,2(4X,I2,7X,A1))
      ILL = NHL(K3)*(NVL(K3) - LL) + 1
      IUL = NHL(K3)*(NVL(K3) - LL + 1)
      IF(LL.LE.NVL(K3))WRITE(NOUT,86)(MAH(I,K3),IVL,I=ILL,IUL)
   86 FORMAT(1H+,T88,':',4X,I2,6X,A1,2(4X,I2,7X,A1))
      WRITE(NOUT,87)
      IF(LL.LE.NVL(K))  WRITE(NOUT,90) (IVL,I=1,NHL11)
      IF(LL.LE.NVL(K2)) WRITE(NOUT,91) (IVL,I=1,NHL21)
      IF(LL.LE.NVL(K3)) WRITE(NOUT,92) (IVL,I=1,NHL31)
      WRITE(NOUT,87)
      IF(LL.EQ.NVL(K))
     *WRITE(NOUT,96) (IHL,I=1,NHL1)
   96 FORMAT(1H+,3(3A4,A2))
      IF(LL.EQ.NVL(K2))
     *WRITE(NOUT,97) (IHL,I=1,NHL2)
   97 FORMAT(1H+,T45,3(3A4,A2))
      IF(LL.EQ.NVL(K3))
     *WRITE(NOUT,98) (IHL,I=1,NHL3)
   98 FORMAT(1H+,T88,3(3A4,A2))
      IF(LL.EQ.NVL(K).OR.LL.EQ.NVL(K2).OR.LL.EQ.NVL(K3))WRITE(NOUT,87)
   94 CONTINUE
      WRITE(NOUT,88) NHL(K),NVL(K),NHL(K2),NVL(K2),NHL(K3),NVL(K3)
   88 FORMAT(1H0,3(13X,I3,' BY',I3,21X))
      WRITE(NOUT,89) WALL(K),WALL(K2),WALL(K3)
   89 FORMAT(1H ,16X,2(A6,37X),A6)
      WRITE(NOUT,104)
  104 FORMAT(1H0)
   95 CONTINUE
      WRITE(NOUT,105)
  105 FORMAT(1H1)
      RETURN
      END
```

```
      SUBROUTINE MAIN2,RETURNS(R1)
      DIMENSION NGAM(9,6),SGAMD(5),CTHEE(5),STHEE(5),NSP(6),
     .   NDTW(5),DDT(5),DWAT(5),SUMABV(5,5),SUMBLO(5,5),WALL(6),
     .   ALPHD(5),BETAD(5),CGAMD(5),DDET(5)
C
C
C
      COMMON /ALBLG/ SURAT(5,6),SUDREF(5),SUSAT(5,5),SUDWTA(5,5),
     .   SUWSDT(5,5),SUWTAS(5,5),SUWSAD(5,5),SUWSAA(5,5),DVRAT(5,6),
     .   DVDREF(5),DVSAT(5,5),DVDWTA(5,5),DVWSDT(5,5),DVWTAS(5,5),
     .   DVWSAD(5,5),DVWSAA(5,5),SUMTOT(5),DVSD(5),SUDWAT(5,6)
      COMMON /ANSN/  NWT,WT(15),MAT(15),NHL(6),NVL(6),HL(3,6),VL(3,6),
     .   MAH(9,6)
      COMMON /ARAYS/ SAT(5,5),GSAT(5,5),GSATS(5,5),DWTAT(5,5),GDWA(5,5),
     .   GDWAS(5,5),WSDT(5,5),GWSD(5,5),GWSDS(5,5),WTAS(5,5),GWTA(5,5),
     .   GWTAS(5,5),WSADT(5,5),GWSB(5,5),GWSBS(5,5),WSAAT(5,5),
     .   GWSA(5,5),GWSAS(5,5),RAT(5,6),GRAT(5,6),GRATS(5,6),DREF(5),
     .   GDRF(5),GDRFS(5)
      COMMON /SPECT/ CPDEG(20),EG(20),SPECN(20),SPECK(20),SOURN,SOURK,
     .   NEG,IBIAS,NEG1,NEG2
      COMMON /IARAY/ IFT(15),INCH(15)
      COMMON /ISCLR/ IPBLDG,IREFLC,ISUM,IY,NDET,NES,NEXT,NGRP,NHIST,
     .               NHISTA,NHISTE,NIPT,NOUT,NPG,NTYPE,NUSOR
      COMMON /RARAY/ C(6),COMENT(20,3),COMP(15),ENGY(16),FTD(16),
     .   PSDAT(11,100),RHO(15),SDR(5),SDRS(5),SIGMA(16),XD(5),YD(5),
     .   ZD(5)
      COMMON /RSCLR/ ABP,AMODI,ARHO,AXIS,CALPH,CBETA,CF,CGAMA,CONST,
     .   DLONG,GMU,GMUS,SMEV,SMVAL,SWP,TM,UIST,UP,VP,WATE,WEIGHT,WP,
     .   YEAR
C
C
C
      DATA ROOF,FLOOR /4HROOF,5HFLOOR/
      DATA WALL /3H X1,3H X2,3H Y1,3H Y2,5HFLOOR,4HROOF/
      DATA Q /4H=   /
C
C
C
6000  FORMAT (//,15X,26H*** RECEIVER LOCATIONS ***,/,5X,
     .   37HRECEIVER     X(FT)      Y(FT)      Z(FT),
     .   10(//,7X,A1,I2,4X,3(F7.1,3X)))
6010  FORMAT (//,7X,25HRADIATION THROUGH ROOF OR,10X,
     .   26HRADIATION PENETRATING WALL,/,10X,19HOVER WALLS THEN AIR,15X,
     .   21HBELOW HEIGHT THEN AIR,/,14X,11HSCATTERING:,24X,
     .   11HSCATTERING:)
6020  FORMAT (/,8X,23HRADIATION SCATTERING IN,12X,
     .   23HRADIATION SCATTERING IN,/,10X,19HROOF OR ABOVE WALLS,13X,
     .   26HWALL BELOW HEIGHT DIRECTLY,/,9X,21HDIRECTLY TO RECEIVER:,
     .   19X,12HTO RECEIVER:)
6030  FORMAT (/,8X,23HRADIATION SCATTERING IN,12X,
     .   23HRADIATION SCATTERING IN,/,7X,25HROOF OR ABOVE WALL HEIGHT,
     .   10X,26HWALL BELOW HEIGHT THEN AIR,/,10X,20HTHEN AIR SCATTERING,
     .   19X,11HSCATTERING:)
6040  FORMAT (6X,2(29HWALL   DOSE RATE  % DEVIATION,6X),
     .   5(/,6X,A6,1PE12.5,3X,0PF7.3,7X,A6,1PE12.5,3X,0PF7.3))
6050  FORMAT (/,8X,24HRADIATION REFLECTED FROM,11X,
     .   24HDIRECT RADIATION THROUGH,/,8X,24HINSIDE SURFACES DIRECTLY,
```

```
     .   15X,5HWALL ,A4,7H TO THE,/,14X,12HTO RECEIVER:,25X,9HRECEIVER:,
     .   /,10X,22HDOSE RATE  % DEVIATION,19X,9HDOSE RATE,/,9X,1PE12.5,
     .   3X,0PF7.3,19X,1PE12.5)
6060  FORMAT (/,8X,24HRADIATION REFLECTED FROM,10X,
     .   25HTOTAL SCATTERED RADIATION,/,8X,24HINSIDE SURFACES THEN AIR,
     .   15X,14HAT RECEIVER   ,I2,1H:,/,14X,11HSCATTERING:,19X,
     .   22HDOSE RATE  % DEVIATION,/,6X,
     .   29HWALL   DOSE RATE  % DEVIATION,8X,1PE12.5,3X,0PF7.3)
6070  FORMAT (6X,A6,1PE12.5,3X,0PF7.3,/,6X,A6,1PE12.5,3X,0PF7.3,11X,
     .   18HTOTAL RADIATION AT,/,6X,A6,1PE12.5,3X,0PF7.3,14X,
     .   11HRECEIVER   ,I2,1H:,/,6X,A6,1PE12.5,3X,0PF7.3,16X,
     .   9HDOSE RATE,/,6X,A6,2PE12.5,3X,0PF7.3,15X,1PE12.5,/,6X,A6,
     .   1PE12.5,3X,0PF7.3)
6080  FORMAT (54H1  SOURCE POSITION LOCATED OUTSIDE OF STRUCTURE X=,
     .   E10.3,3HY =,E10.3,3HZ =,E10.3,/,
     .   34H  NO COMPUTATION MADE IN THIS CASE)
6100  FORMAT (1H1,1X,20A4)
6110  FORMAT (1PE17.3,E21.3,6X,0P6F10.2)
6120  FORMAT (//,26X,19H*** SOURCE DATA ***,//,5X,15HSOURCE ENERGY =,
     .   F5.2,3H - ,F5.2,4H MEV,//,5X,
     .   34HNUMBER OF PARTICLE HISTORIES RUN =,I6,//,5X,
     .   39H SOURCE WEIGHT    SOURCE MULTIPLICATION,6X,
     .   20HSOURCE POSITION (FT),11X,16HAXIS FOR BIASING,/,5X,
     .   15H(PARTICLES/SEC),10X,6HFACTOR,16X,2(1HX,9X,1HY,9X,1HZ,9X)/)
6140  FORMAT (/,5X,10HRECEIVER =,I2,18H POSITION(FT) ( X=,F7.1,3H Y=,
     .   F7.1,3H Z=,F7.1,1H),///,20X,
     .   35H***DOSE RATE CONTRIBUTION(MR/YR)***)
6150  FORMAT (/,8X,24HRADIATION REFLECTED FROM,11X,
     .   24HDIRECT RADIATION THROUGH,/,8X,24HINSIDE SURFACES THEN AIR,
     .   14X,17HWALLS TO RECEIVER,/,14X,11HSCATTERING:,/,6X,
     .   29HWALL   DOSE RATE  % DEVIATION,13X,16HWALL   DOSE RATE)
6160  FORMAT (6(6X,A6,1PE12.5,3X,0PF7.3,14X,A6,1PE12.5,/))
6170  FORMAT (/,8X,19HRADIATION REFLECTED,9X,15HTOTAL SCATTERED,9X,
     .   5HTOTAL,/,11X,13HDIRECTLY FROM,12X,12HRADIATION AT,9X,
     .   9HRADIATION,/,10X,15HINSIDE SURFACES,14X,8HRECEIVER,10X,
     .   11HAT RECEIVER,/,7X,22HDOSE RATE  % DEVIATION,4X,
     .   22HDOSE RATE  % DEVIATION,3X,9HDOSE RATE,/,6X,1PE12.5,3X,
     .   0PF7.3,4X,1PE12.5,3X,0PF7.3,2X,1PE12.5)
6180  FORMAT (1H1,69X,5HPAGE ,I2,/,15X,20H***** TOTAL OF EACH ,
     .   35HCONTRIBUTION FROM ALL SOURCES *****)
6190  FORMAT (1H1,69X,5HPAGE ,I2,/,13X,
     .   50H***** TOTAL RADIATION THROUGH EACH STRUCTURE WALL ,
     .   14HAND ROOF *****,/,13X,31H***** FROM ALL SOURCES TO EACH ,
     .   21HRECEIVER LOCATION ***)
6200  FORMAT (/,5X,4HWALL,11X,5(4X,A1,I2,5X))
6210  FORMAT (/,6X,A4,10H ABOVE HT.,5(1PE12.3))
6220  FORMAT (/,11X,9HBELOW HT.,5(1PE12.3))
6230  FORMAT (/,5X,A5,10X,5(1PE12.3))
6240  FORMAT (/,5X,5HTOTAL,10X,5(1PE12.3))
6250  FORMAT (//,7X,30HWALL   POSITION   NO. INCIDENT,15X,10HNO. GAMMAS,
     .   /,16X,4H(FT),8X,6HGAMMAS,13X,21HINCIDENT ON EACH AREA,/,1H ,
     .   T40,1HA,4X,1HB,4X,1HC,4X,1HD,4X,1HE,4X,1HF,4X,1HG,4X,1HH,4X,
     .   1HI,//,6(6X,A6,F8.2,I14,2X,9I5,/))
6260  FORMAT (1H1,15X,17H*** WALL DATA ***,//,6X,
     .   35HTHICKNESS   COMPOSITION   THICKNESS,/,8X,4HTYPE,20X,
     .   9H(FT - IN),//,6(I10,10X,A5,I9,2H -,I3,/))
6270  FORMAT (1H+,T107,14HSOURCE BIASING,F8.4)
```

```
6280  FORMAT (1H+,T18,4H(TM=,F6.3,1H))
6290  FORMAT (1H1,2(//1X,20A4)//5X,32HAIR DENSITY AT SITE (GM/CM**3) =,
     1 1PE10.3,/,5X,24HINITIAL RANDOM NUMBER IS,8X,I10)
6300  FORMAT (1H1,T13,21H*** SPECTRAL DATA ***,//,T6,8HBOUNDARY,
     ,        T19,6HENERGY,T33,8HSPECTRAL,/,T7,6HNUMBER,T20,5H(MEV),
     ,        T35,3HCPD,//)
6310  FORMAT (8X,I2,6X,1PE10.3,4X,1PE10.3)
6320  FORMAT (//,T6,37HINTEGRATED SOURCE STRENGTH (NORMAL) =,1PE10.3,
     ,        //,T6,42HSPECTRAL DISTRIBUTION IS NORMAL (UNBIASED))
6330  FORMAT (1H1,T20,21H*** SPECTRAL DATA ***,//,T6,8HBOUNDARY,T19,
     ,        6HENERGY,T33,8HSPECTRAL,T48,6HNORMAL,T62,6HBIASED,/,T7,
     ,        6HNUMBER,T20,5H(MEV),T35,3HCPD,T47,7HSPECTRA,T61,
     ,        7HSPECTRA,//)
6340  FORMAT ((8X,I2,6X,1PE10.3,3(4X,1PE10.3)))
6350  FORMAT (//,T6,37HINTEGRATED SOURCE STRENGTH (NORMAL) =,1PE10.3,/,
     ,        T6,37HINTEGRATED SOURCE STRENGTH (BIASED) =,1PE10.3,/,
     ,        T6,31HSPECTRAL DISTRIBUTION IS BIASED)
C
C
      IF (ISUM .EQ. 0) GO TO 25
10    CALL ZERO (SURAT,SUDREF,SUSAT,SUDWTA,SUWSDT,SUWTAS,SUWSAD,SUWSAA)
      CALL ZERO (DVRAT,DVDREF,DVSAT,DVDWTA,DVWSDT,DVWTAS,DVWSAD,DVWSAA)
      IPAGE = 1
      DO 20 K = 1,NDET
      SUMTOT(K) = 0.0
      DVSD(K) = 0.0
      DO 20 NW = 1,6
      SUDWAT(K,NW) = 0.0
20    CONTINUE
25    CONTINUE
      CALL ZERO (RAT,DREF,SAT,DWTAT,WSDT,WTAS,WSADT,WSAAT)
      CALL ZERO (GRAT,GDRF,GSAT,GDWA,GWSD,GWTA,GWSB,GWSA)
      CALL ZERO (GRATS,GDRFS,GSATS,GDWAS,GWSDS,GWTAS,GWSBS,GWSAS)
      DO 30 K = 1,NDET
      SDR(K) = 0.0
      SDRS(K) = 0.0
      DWAT(K) = 0.0
30    CONTINUE
      DO 40 NB = 1,6
      NSP(NB) = 0
      DO 40 K = 1,9
      NGAM(K,NB) = 0
40    CONTINUE
      WRITE(NOUT,6290)  ((COMENT(I,J),I=1,20),J=1,2),ARHO,IY
      IF (IBIAS .NE. 0) GO TO 42
      WRITE (NOUT,6300)
      WRITE(NOUT,6310)  (I,EG(I),CPDEG(I),I=1,NEG)
      WRITE (NOUT,6320) SOURN
      GO TO 46
42    WRITE (NOUT,6330)
      WRITE(NOUT,6340)  (I,EG(I),CPDEG(I),SPECN(I),SPECK(I),I=1,NEG)
      WRITE(NOUT,6350)  SOURN,SOURK
46    CONTINUE
      WRITE (NOUT,6260) (NU,COMP(NU),IFT(NU),INCH(NU),NU=1,NWT)
      CALL GEOMED (WALL)
      WRITE (NOUT,6120) EG(1),EG(NEG),NHIST
      DO 360 IS = 1,NUSOR
```

```
      WATE  = PSDAT(1,IS)
      ATTEN = PSDAT(2,IS)
      ABP   = PSDAT(3,IS)
      AXIS  = PSDAT(4,IS)
      TM    = PSDAT(5,IS)
      XS    = PSDAT(6,IS)
      YS    = PSDAT(7,IS)
      ZS    = PSDAT(8,IS)
      XP    = PSDAT(9,IS)
      YP    = PSDAT(10,IS)
      ZP    = PSDAT(11,IS)
      IF (XS .LT. C(1) .OR. XS .GT. C(2)) GO TO 50
      IF (YS .LT. C(3) .OR. YS .GT. C(4)) GO TO 50
      IF (ZS .GE. C(5) .AND. ZS .LE. C(6)) GO TO 60
50    WRITE (NOUT,6080) XS,YS,ZS
      RETURN
60    WRITE (NOUT,6110) WATE,ATTEN,XS,YS,ZS,XP,YP,ZP
      IF (ABP .NE. 0.0) WRITE (NOUT,6270) ABP
      IF (ABP .LT. 0.0) WRITE (NOUT,6280) TM
      JGP   = 1
      WATED = WATE
      IF (ATTEN .LE. 0.0) ATTEN = 1.0
      UIST  = ATTEN * 1.0E3 * YEAR
      CONST = 0.0
      IF (ABP .GT. 0.0) CONST = (1.0 - EXP(-ABP*3.14159))
      TM    = COS(TM)
      IF (AXIS .GT. 0.0) GO TO 70
      XP    = 1.0E20
      YP    = 1.0E20
      ZP    = 1.0E20
70    IF (AXIS .EQ. 0.0) GO TO 80
      DSQ   = (XP - XS) ** 2 + (YP - YS) ** 2 + (ZP - ZS) ** 2
      D     = SQRT(DSQ)
      UP    = (XP - XS) / D
      VP    = (YP - YS) / D
      WP    = (ZP - ZS) / D
      SWP   = SQRT(1.0 - WP ** 2)
80    CONTINUE
      DO 340 IE1 = 1,NHISTE
      CALL SENG
      E     = SMEV
      WEIGHT= WEIGHT * WATED
      DO 90 I = 2,NES
      IF (E .LT. ENGY(I)) GO TO 100
90    CONTINUE
100   SIG   = SIGMA(I-1) + (E - ENGY(I-1)) * (SIGMA(I) - SIGMA(I-1)) /
     .        (ENGY(I) - ENGY(I-1))
      FDCF  = FTD(I-1) + (E - ENGY(I-1)) * (FTD(I) - FTD(I-1)) /
     .        (ENGY(I) - ENGY(I-1))
      DO 150 K = 1,NDET
      DD    = SQRT((XD(K)-XS)**2 + (YD(K)-YS)**2 + (ZD(K)-ZS)**2)
      DDT(K) = DD
      ALP   = (XD(K) - XS) / DD
      BET   = (YD(K) - YS) / DD
      GAM   = (ZD(K) - ZS) / DD
      CALL GEOM (XS,YS,ZS,ALP,BET,GAM,NB,NT,IJ,DIST)
      NDTW(K) = NB
```

```
      WALT  = 1.0
      GO TO 150
C
      IF (NT .EQ. 0) GO TO 140
      GO TO (110,110,120,120,130,130), NB
110   WALT  = EXP(-RHO(NT) / ABS(ALP))
      GO TO 140
120   WALT  = EXP(-RHO(NT) / ABS(BET))
      GO TO 140
130   WALT = EXP(-RHO(NT) / ABS(GAM))
140   DPRICE= WALT * EXP(-SIG * DD * 30.48) * FDCF / (DD * 30.48) ** 2
      DWAT(K) = DPRICE / 12.5664 * WATE
150   CONTINUE
      DO 330 L = 1,NHISTA
      CALL RAY
      CALL GEOM (XS,YS,ZS,CALPH,CBETA,CGAMA,NB,NT,IJ,DIST)
      NSP(NB) = NSP(NB) + 1
      NGAM(IJ,NB) = NGAM(IJ,NB) + 1
      XI    = XS + CALPH * DIST
      YI    = YS + CBETA * DIST
      ZI    = ZS + CGAMA * DIST
      GO TO (160,160,170,170,180,180), NB
160   CTHEO = ABS(CALPH)
      GO TO 190
170   CTHEO = ABS(CBETA)
      GO TO 190
180   CTHEO = ABS(CGAMA)
190   CONTINUE
      DO 200 K = 1,NDET
      DDET(K) = SQRT((XD(K) - XI) ** 2 + (YD(K) - YI) ** 2 +
     .         (ZD(K) - ZI) ** 2)
      CGAMD(K) = (ZD(K) - ZI) / DDET(K)
      SGAMD(K) = SQRT(1.0 - CGAMD(K) ** 2)
      ALPHD(K) = (XD(K) - XI) / DDET(K)
      BETAD(K) = (YD(K) - YI) / DDET(K)
200   CONTINUE
      NBP   = NB
      IF (NB .EQ. 5) GO TO 320
      IF (NT .NE. 0) GO TO 320
      IF (NB .EQ. 5) GO TO 290
      IF (NB .EQ. 6) NB = 5
      DT    = 1.0
      IF (NT .NE. 0) DT = EXP(-RHO(NT) / CTHEO)
      DATE  = WATE * DT
      DO 270 K = 1,NDET
      COSB  = CALPH * ALPHD(K) + CBETA * BETAD(K) + CGAMA * CGAMD(K)
      E     = SMEV
      DDIST = SQRT((XD(K) - XS) ** 2 + (YD(K) - YS) ** 2 +
     .         (ZD(K) - ZS) ** 2)
      CALL AIRT (COSB,DDIST,AT,E)
      VALUE= DATE * AT
      IF (NT .EQ. 0) SAT(K,NB) = SAT(K,NB) + VALUE
      IF (NT .GT. 0) DWTAT(K,NB) = DWTAT(K,NB) + VALUE
      IF (NT .EQ. 0) GO TO 270
      GO TO (210,210,220,220,230), NB
210   CTHEE(K) = ALPHD(K) * (-1.0) ** NB
      GO TO 240
```

```
220   CTHEE(K) = BETAD(K) * (-1.0) ** NB
      GO TO 240
230   CTHEE(K) = CGAMD(K)
240   STHEE(K) = SQRT(1.0 - CTHEE(K) ** 2)
      IF (CTHEE(K) .LT. 0.0) GO TO 270
      CALL TRAND (CTHEO,CTHEE(K),NT,SWT,E)
      DO 250 I = 2,NES
      IF (E .LT. ENGY(I)) GO TO 260
250   CONTINUE
260   SIG   = SIGMA(I-1) + (E - ENGY(I-1)) * (SIGMA(I) - SIGMA(I-1)) /
     .        (ENGY(I) - ENGY(I-1))
      FDCF  = FTD(I-1) + (E - ENGY(I-1)) * (FTD(I) - FTD(I-1)) /
     .        (ENGY(I) - ENGY(I-1))
      VALUE = WATE * SWT * EXP(-SIG * DDET(K) * CF) * FDCF /
     .        (DDET(K) * CF) ** 2
      IF (NB .NE. 5) WSDT(K,NB) = WSDT(K,NB) + VALUE
      IF (NB .EQ. 5) WSADT(K,NB) = WSADT(K,NB) + VALUE
270   CONTINUE
      IF (NT .EQ. 0) GO TO 320
      CALL RAND (IY,RN)
      CTHES = RN
      CALL TRAND (CTHEO,CTHES,NT,ST,E)
      ST    = ST * 6.2832
      DO 280 K = 1,NDET
      STHES = SQRT(1.0 - CTHES ** 2)
      CALL RAND (IY,RN)
      CPHIS = COS(6.2832 * RN)
      CTHED = CTHEE(K) * CTHES + STHEE(K) * STHES * CPHIS
      CALL AIRT (CTHED,DDET(K),AT,E)
      IF (NB .LT. 5) AT = AT * 0.5
      VALUE = WATE * AT * ST
      IF (NT .EQ. 5) WSAAT(K,NB) = WSAAT(K,NB) + VALUE
      IF (NT .NE. 5) WTAS(K,NB) = WTAS(K,NB) + VALUE
280   CONTINUE
290   NB    = NBP
      IF (IREFLC .EQ. 1) GO TO 320
      DO 2250 JW = 1,6
      IF (JW .EQ. NB) GO TO 2250
      IH    = NHL(JW)
      JH    = NVL(JW)
      MAC   = IH * JH
      DO 2200 IW = 1,MAC
      IF (MAH(IW,JW) .EQ. 0) GO TO 2260
2200  CONTINUE
2250  CONTINUE
      GO TO 320
2260  CALL DREFL(XI,YI,ZI,NB,NDET,CTHEO,DREF)
      CALL REFL(XI,YI,ZI,CTHEO,NB,REF,E,CALPHR,CBETR,CGAMR)
      IF (REF .EQ. 0.0) GO TO 320
      DO 2500 K = 1,NDET
      COSB  = CALPHR*ALPHD(K)+CBETR*BETAD(K)+CGAMR*CGAMD(K)
      CALL AIRT(COSB,DDET(K),AT,E)
      RAT(K,NB) = RAT(K,NB) + WATE * AT * REF
2500  CONTINUE
  320 IF (( L + NHISTA*(IE1-1)) .LT. JGP*NPG )  GO TO 330
      JGP   = JGP + 1
      CALL SUMSQ
```

```
330   CONTINUE
340   CONTINUE
360   CONTINUE
      WRITE (NOUT,6250) (WALL(NW),C(NW),NSP(NW),
     .                  (NGAM(NU,NW),NU=1,9),NW=1,6)
      WRITE (NOUT,6000) ((Q,K,XD(K),YD(K),ZD(K)),K=1,NDET)
      CALL DEV
      DO 380 K = 1,NDET
      SURAT(K,6) = SURAT(K,6) + RAT(K,6)
      DVRAT(K,6) = DVRAT(K,6) + GRATS(K,6)
      KM     = NDTW(K)
      DWAT(K) = DWAT(K) * UIST
      SUDWAT(K,KM) = SUDWAT(K,KM) + DWAT(K)
      SUDREF(K) = SUDREF(K) + DREF(K)
      DVDREF(K) = DVDREF(K) + GDRFS(K)
      TOTLD = RAT(K,6) + DREF(K)
      DO 370 NW = 1,5
      SUSAT(K,NW) = SUSAT(K,NW) + SAT(K,NW)
      DVSAT(K,NW) = DVSAT(K,NW) + GSATS(K,NW)
      SUDWTA(K,NW) = SUDWTA(K,NW) + DWTAT(K,NW)
      DVDWTA(K,NW) = DVDWTA(K,NW) + GDWAS(K,NW)
      SUWSDT(K,NW) = SUWSDT(K,NW) + WSDT(K,NW)
      DVWSDT(K,NW) = DVWSDT(K,NW) + GWSDS(K,NW)
      SUWTAS(K,NW) = SUWTAS(K,NW) + WTAS(K,NW)
      DVWTAS(K,NW) = DVWTAS(K,NW) + GWTAS(K,NW)
      SURAT(K,NW) = SURAT(K,NW) + RAT(K,NW)
      DVRAT(K,NW) = DVRAT(K,NW) + GRATS(K,NW)
      SUWSAD(K,NW) = SUWSAD(K,NW) + WSADT(K,NW)
      DVWSAD(K,NW) = DVWSAD(K,NW) + GWSBS(K,NW)
      SUWSAA(K,NW) = SUWSAA(K,NW) + WSAAT(K,NW)
      DVWSAA(K,NW) = DVWSAA(K,NW) + GWSAS(K,NW)
      TOTLD = TOTLD + DWTAT(K,NW) + WSDT(K,NW) + WTAS(K,NW) +
              RAT(K,NW) + SAT(K,NW) + WSADT(K,NW) + WSAAT(K,NW)
370   CONTINUE
      DVSD(K) = DVSD(K) + SDRS(K)
      SUMTOT(K) = SUMTOT(K) + TOTLD
      IPAGE = IPAGE + 1
      WRITE (NOUT,6100) (COMENT(I,3),I=1,20)
      WRITE (NOUT,6140) K,XD(K),YD(K),ZD(K)
      WALL(5) = ROOF
      WRITE (NOUT,6010)
      WRITE (NOUT,6040) ((WALL(NW),SAT(K,NW),GSAT(K,NW),WALL(NW),
     .                  DWTAT(K,NW),GDWA(K,NW),NW=1,4),WALL(5),SAT(K,5),
     .                  GSAT(K,5))
      WRITE (NOUT,6020)
      WRITE (NOUT,6040) ((WALL(NW),WSADT(K,NW),GWSB(K,NW),WALL(NW),
     .                  WSDT(K,NW),GWSD(K,NW),NW=1,4),WALL(5),
     .                  WSADT(K,5),GWSB(K,5))
      WRITE (NOUT,6030)
      WRITE (NOUT,6040) ((WALL(NW),WSAAT(K,NW),GWSA(K,NW),WALL(NW),
     .                  WTAS(K,NW),GWTA(K,NW),NW=1,4),WALL(5),
     .                  WSAAT(K,5),GWSA(K,5))
      WALL(5) = FLOOR
      WRITE (NOUT,6050) WALL(KM),DREF(K),GDRF(K),DWAT(K)
      WRITE (NOUT,6060) K,TOTLD,SDR(K)
      TOTLD = TOTLD + DWAT(K)
      WRITE (NOUT,6070) ((WALL(NW),RAT(K,NW),GRAT(K,NW),NW=1,3),K,
```

```
     .                    (WALL(NW),RAT(K,NW),GRAT(K,NW),NW=4,5),TOTLD,
     .                    WALL(6),RAT(K,6),GRAT(K,6))
380  CONTINUE
     IF (ISUM .NE. 1) GO TO 440
     DO 390 K = 1,NDET
     IF (DVSD(K) .NE. 0.0) DVSD(K) =
     .   SQRT(DVSD(K)) / (SUMTOT(K) / NUSOR) * 100.0
     IF (SURAT(K,6) .NE. 0.0) DVRAT(K,6) =
     .   SQRT(DVRAT(K,6)) / (SURAT(K,6) / NUSOR) * 100.0
     IF (SUDREF(K) .NE. 0.0) DVDREF(K) =
     .   SQRT(DVDREF(K)) / (SUDREF(K) / NUSOR) * 100.0
     DO 390 NW = 1,5
     IF (SUSAT(K,NW) .NE. 0.0) DVSAT(K,NW) =
     .   SQRT(DVSAT(K,NW)) / (SUSAT(K,NW) / NUSOR) * 100.0
     IF (SUDWTA(K,NW) .NE. 0.0) DVDWTA(K,NW) =
     .   SQRT(DVDWTA(K,NW)) / (SUDWTA(K,NW) / NUSOR) * 100.0
     IF (SUWSDT(K,NW) .NE. 0.0) DVWSDT(K,NW) =
     .   SQRT(DVWSDT(K,NW)) / (SUWSDT(K,NW) / NUSOR) * 100.0
     IF (SUWTAS(K,NW) .NE. 0.0) DVWTAS(K,NW) =
     .   SQRT(DVWTAS(K,NW)) / (SUWTAS(K,NW) / NUSOR) * 100.0
     IF (SURAT(K,NW) .NE. 0.0) DVRAT(K,NW) =
     .   SQRT(DVRAT(K,NW)) / (SURAT(K,NW) / NUSOR) * 100.0
     IF (SUWSAD(K,NW) .NE. 0.0) DVWSAD(K,NW) =
     .   SQRT(DVWSAD(K,NW)) / (SUWSAD(K,NW) / NUSOR) * 100.0
     IF (SUWSAA(K,NW) .NE. 0.0) DVWSAA(K,NW) =
     .   SQRT(DVWSAA(K,NW)) / (SUWSAA(K,NW) / NUSOR) * 100.0
390  CONTINUE
     IPAGE = 1
     DO 420 K = 1,NDET
     TOTD  = 0.0
     DO 400 NW = 1,6
     TOTD  = TOTD + SUDWAT(K,NW)
400  CONTINUE
     TOTD  = TOTD + SUMTOT(K)
     WRITE (NOUT,6180) IPAGE
     WRITE (NOUT,6140) K,XD(K),YD(K),ZD(K)
     WALL(5) = ROOF
     WRITE (NOUT,6010)
     WRITE (NOUT,6040) ((WALL(NW),SUSAT(K,NW),DVSAT(K,NW),WALL(NW),
     .                  SUDWTA(K,NW),DVDWTA(K,NW),NW=1,4),WALL(5),
     .                  SUSAT(K,5),DVSAT(K,5))
     WRITE (NOUT,6020)
     WRITE (NOUT,6040) ((WALL(NW),SUWSAD(K,NW),DVWSAD(K,NW),WALL(NW),
     .                  SUWSDT(K,NW),DVWSDT(K,NW),NW=1,4),WALL(5),
     .                  SUWSAD(K,5),DVWSAD(K,5))
     WRITE (NOUT,6030)
     WRITE (NOUT,6040) ((WALL(NW),SUWSAA(K,NW),DVWSAA(K,NW),WALL(NW),
     .                  SUWTAS(K,NW),DVWTAS(K,NW),NW=1,4),WALL(5),
     .                  SUWSAA(K,5),DVWSAA(K,5))
     WALL(5) = FLOOR
     WRITE (NOUT,6150)
     WRITE (NOUT,6160) (WALL(NW),SURAT(K,NW),DVRAT(K,NW),WALL(NW),
     .                  SUDWAT(K,NW),NW=1,6)
     WRITE (NOUT,6170) SUDREF(K),DVDREF(K),SUMTOT(K),DVSD(K),TOTD
     SUMTOT(K) = TOTD
     DO 410 NW = 1,5
     SUMABV(K,NW) = SUSAT(K,NW) + SUWSAD(K,NW) + SUWSAA(K,NW)
```

```
      SUMBLO(K,NW) = SUDWTA(K,NW) + SUWSDT(K,NW) + SUWTAS(K,NW) +
     ,               SUDWAT(K,NW)
410   CONTINUE
      SUMABV(K,5) = SUMABV(K,5) + SUDWAT(K,6)
      IPAGE = IPAGE + 1
420   CONTINUE
      WRITE (NOUT,6190) IPAGE
      WRITE (NOUT,6200) ((Q,K),K=1,NDET)
      DO 430 NW = 1,4
      WRITE (NOUT,6210) WALL(NW),((SUMABV(K,NW)),K=1,NDET)
430   WRITE (NOUT,6220) ((SUMBLO(K,NW)),K=1,NDET)
      WRITE (NOUT,6230) WALL(5),((SUDWAT(K,5)),K=1,NDET)
      WRITE (NOUT,6230) WALL(6),((SUMABV(K,5)),K=1,NDET)
      WRITE (NOUT,6240) ((SUMTOT(K)),K=1,NDET)
440   IF (IPBLDG .EQ. 1 .AND. NEXT .EQ. 1) RETURN R1
      IF (NEXT .NE. 1) RETURN
      CALL EMAIN1
      IF (ISUM .NE. 1) GO TO 25
      GO TO 10
      END
```

```
      SUBROUTINE RAY
      COMMON /ISCLR/ IPBLDG,IREFLC,ISUM,IY,NDET,NES,NEXT,NGRP,NHIST,
                     NHISTA,NHISTE,NIPT,NOUT,NPG,NTYPE,NUSOR
      COMMON /RSCLR/ ABP,AMODI,ARHO,AXIS,CALPH,CBETA,CF,CGAM,CONST,
                     DLONG,GMU,GMUS,SMEV,SMVAL,SWP,TM,UIST,UP,VP,WATE
                     WEIGHT,WP,YEAR
      CALL RAND(IY,RN)
      IF(ABP) 707,701,702
C        SELECT FROM A BIASED UNIFORM DISTRIBUTION
  707 IF(RN.LT.-ABP) GO TO 708
C        OUTSIDE THE TM CONE
      CALL RAND(IY,RN)
      CGAM = TM - RN*(TM+1.0)
      SGAM = SQRT(1.0 - CGAM**2)
      WATE = WEIGHT*(TM + 1.0)*0.5/(1.0 + ABP)
      GO TO 703
  708 CONTINUE
      CALL RAND(IY,RN)
C        INSIDE THE TM CONE
      CGAM = 1.0 - RN*(1.0 - TM)
      SGAM = SQRT(1.0 - CGAM**2)
      WATE = WEIGHT*(1.0 - TM)*0.5/(-ABP)
      GO TO 703
C     SAMPLE A DIRECTION FROM AN ISOTROPIC DISTRIBUTION
  701 CGAM = 1.0 - 2.0*RN
      SGAM = SQRT(1.0 - CGAM**2)
      GO TO 703
C        SAMPLE A DIRECTION FROM AN EXP BIASED DISTRIBUTION
  702 GAMA = -ALOG(1.0 - CONST*RN)/ABP
      CGAM = COS(GAMA)
      SGAM=SQRT(1.0-CGAM**2)
      WATE = WEIGHT*SGAM*CONST/(2.0*ABP*EXP(-ABP*GAMA))
  703 CONTINUE
      CALL RAND(IY,RN)
      PHI=6.2832*RN
      CPHI=COS(PHI)
      SPHI=SIN(PHI)
C     COMPUTE DIRECTION COSINES FOR DIRECTION SAMPLED
      IF(AXIS) 704,704,705
C        USE THE NORMAL Z DIRECTION FOR THE AXIS
  704 CONTINUE
      CALPH=SGAM*CPHI
      CBETA=SGAM*SPHI
      GO TO 706
C        USE THE INPUT DIRECTION FOR THE AXIS
  705 CONTINUE
      IF(SWP.GT.1.0E-4) GO TO 80
      CALPH = SGAM*CPHI
      CBETA = SGAM*SPHI
      GO TO 110
   80    W = CGAM*WP + SGAM*SWP*CPHI
      SWPP = SQRT(1.0 -     W**2)
      IF(SWPP.GT.1.0E-4) GO TO 100
      CALPH = CPHI*SWPP
      CBETA = SPHI*SWPP
      CGAM = W
      GO TO 110
```

```
100 CDEL = (CGAM - WP*W    )/(SWP*SWPP)
    SDEL = SGAM*SPHI/SWPP
    CPHIN = (UP*CDEL + VP*SDEL)/SWP
    SPHIN = (VP*CDEL - UP*SDEL)/SWP
    CALPH = SWPP*CPHIN
    CBETA = SWPP*SPHIN
    CGAM = W
110 CONTINUE
706 CONTINUE
    RETURN
    END
```

```
      SUBROUTINE RAND(IY,YFL)
C
C     THIS IS THE CDC VERSION OF THE IBM RANDOM NUMBER GENERATOR RANDU
C
      IY=IY*65539
      IY=IY.AND.17777777777B
      YFL=IY
      YFL=YFL*0.4656613E-9
      RETURN
      END
```

```
      SUBROUTINE SUMSQ
      COMMON /ARAYS/ SCATR(450),SREFL(5,6,3),DREFL(5,3)
      COMMON /ISCLR/ IPBLDG,IREFLC,ISUM,IY,NDET,NES,NEXT,NGRP,NHIST,
     .               NHISTA,NHISTE,NIPT,NOUT,NPG,NTYPE,NUSOR
      COMMON /RARAY/ C(6),COMENT(20,3),COMP(15),ENGY(16),FTD(16),
     .               PSDAT(11,100),RHO(15),SDR(5),SDRS(5),SIGMA(16),
     .               XD(5),YD(5),ZD(5)
      COMMON /RSCLR/ ABP,AMODI,ARHO,AXIS,CALPH,CBETA,CF,CGAM,CONST,
     .               DLONG,GMU,GMUS,SMEV,SMVAL,SWP,TM,UIST,UP,VP,WATE,
     .               WEIGHT,WP,YEAR
C
C        IN FOUR DIMENSIONS, SCATR(450) WOULD BE SCATR(5,5,3,6)
C
      INDEX(I1,I2,I3,I4) = I1 + 5*(I2-1 + 5*(I3-1 + 3*(I4-1)))
      PIG   = 1.0 / FLOAT(NPG) * UIST
      DO 2 I = 1,NDET
      TSD   = DREFL(I,1) * PIG
      DREFL(I,2) = DREFL(I,2) + TSD
      DREFL(I,3) = DREFL(I,3) + TSD * TSD
      DREFL(I,1) = 0.0
      DO 1 K = 1,6
      X     = SREFL(I,K,1) * PIG
      TSD   = TSD + X
      SREFL(I,K,2) = SREFL(I,K,2) + X
      SREFL(I,K,3) = SREFL(I,K,3) + X * X
      SREFL(I,K,1) = 0.0
      DO 1 J = 1,5
      INDX1 = INDEX(I,J,1,K)
      INDX2 = INDEX(I,J,2,K)
      INDX3 = INDEX(I,J,3,K)
      X     = SCATR(INDX1) * PIG
      TSD   = TSD + X
      SCATR(INDX2) = SCATR(INDX2) + X
      SCATR(INDX3) = SCATR(INDX3) + X * X
      SCATR(INDX1) = 0.0
1     CONTINUE
      SDR(I) = SDR(I) + TSD
      SDRS(I) = SDRS(I) + TSD*TSD
2     CONTINUE
      RETURN
      END
```

SUBROUTINE ZERO


```
      SUBROUTINE ZERO (A,B,C,D,E,F,G,H)
      COMMON /ISCLR/ IPBLDG,IREFLC,ISUM,IY,NDET,NES,NEXT,NGRP,NHIST,
     .               NHISTA,NHISTE,NIPT,NOUT,NPG,NTYPE,NUSOR
      DIMENSION A(5,6), B(5), C(5,5), D(5,5), E(5,5),F(5,5), G(5,5),
     1          H(5,5)
      DO 10 K = 1,NDET
      A(K,6) = 0.0
      B(K) = 0.0
      DO 10 N = 1,5
      C(K,N) =0.0
      D(K,N) =0.0
      E(K,N) =0.0
      F(K,N) =0.0
      A(K,N) =0.0
      G(K,N) =0.0
      H(K,N) =0.0
   10 CONTINUE
      RETURN
      END
```

```
      BLOCK DATA BLKDAT1
      COMMON /ISCLR/ IPBLDG,IREFLC,ISUM,IY,NDET,NES,NEXT,NGRP,NHIST,
     .               NHISTA,NHISTE,NIPT,NOUT,NPG,NTYPE,NUSOR
      COMMON /RARAY/ C(6),COMENT(20,3),COMP(15),ENGY(16),FTD(16),
     .               PSDAT(11,100),RHO(15),SDR(5),SDRS(5),SIGMA(16),
     .               XD(5),YD(5),ZD(5)
      DATA NES   / 16 /
      DATA ENGY  / .01, .02, .03, .04, .05, .06, .10, .20, .492, 1.042,
     A             2.0, 2.98, 4.02,  5.0, 6.0, 8.0/
      DATA SIGMA / .6233E-2, .8939E-3, .4116E-3, .2965E-3, .2530E-3,
     A             .2318E-3, .1952E-3, .1584E-3, .1135E-3, .8092E-4,
     A             .5765E-4, .4656E-4, .3975E-4, .3559E-4, .3263E-4,
     A             .2879E-4/
C        HENDERSON FTD TISSUE FACTORS FROM XDC 59-8-179 AUG 14,1959
      DATA FTD   / .338E-5, .775E-6, .334E-6, .192E-6, .140E-6,
     A             .123E-6, .149E-6, .338E-6, .912E-6, .182E-5,
     A             .276E-5, .391E-5, .481E-5, .557E-5, .633E-5,
     A             .779E-5/
      END
```

```
      SUBROUTINE SENG
      COMMON /SPECT/ CPDEG(20),EG(20),SPECN(20),SPECK(20),SOURN,SOURK,
     .               NEG,IBIAS,NEG1,NEG2
      COMMON /ISCLR/ IPBLDG,IREFLC,ISUM,IY,NDET,NES,NEXT,NGRP,NHIST,
     .               NHISTA,NHISTE,NIPT,NOUT,NPG,NTYPE,NUSOR
      COMMON /RSCLR/ ABP,AMODI,ARHO,AXIS,CALPH,CBETA,CF,CGAM,CONST,
     .               DLONG,GMU,GMUS,SMEV,SMVAL,SWP,TM,UIST,UP,VP,WATE,
     .               WEIGHT,WP,YEAR
      CALL RAND(IY,RN)
      DO 20 I=2,NEG
      IF (RN.LT.CPDEG(I))  GO TO 40
   20 CONTINUE
      I     = NEG
   40 RATIO = (RN-CPDEG(I-1)) / (CPDEG(I)-CPDEG(I-1))
      SMEV  = EG(I-1) + RATIO * (EG(I)-EG(I-1))
      IF (IBIAS.EQ.0)  WEIGHT = SOURN
      IF (IBIAS.EQ.0)  RETURN
      SN    = SPECN(I-1) + RATIO * (SPECN(I)-SPECN(I-1))
      SK    = SPECK(I-1) + RATIO * (SPECK(I)-SPECK(I-1))
      WEIGHT= SOURK * SN / SK
      RETURN
      END
```

```
      BLOCK DATA BLKDAT4
      COMMON /AIRD/  NTHE,NATE(3),ABET(21),ATE(20,3),ATD(3,20,19)
      DATA NTHE/21/,NATE/13,20,20/
      DATA            ABET/  0.0,   1.0,   2.0,   3.0,   5.0,   7.0,
     .                      10.0,  15.0,  20.0,  30.0,  40.0,  50.0,
     .                      60.0,  70.0,  80.0,  90.0, 100.0, 120.0,
     .                     140.0, 160.0, 180.0/
      DATA            ATE / 10.0,   9.0,   8.0,   7.0,   6.0,   5.0,   4.0,
     .                       3.0,   2.0,   1.0,   0.5,   0.1,  0.01,   0.0,
     .                       0.0,   0.0,   0.0,   0.0,   0.0,   0.0,
     .                      15.0,  13.5,  12.0,  10.0,  7.79,  6.07,  3.68,
     .                      2.86,  2.23,  1.74,  1.35,  .823,   0.5,  .303,
     .                      .184,.0676,.0248,.00912,.00335,.001,
     .                      15.0,  13.5,  12.0,  10.0,  7.79,  6.07,  3.68,
     .                      2.86,  2.23,  1.74,  1.35,  .823,   0.5,  .303,
     .                      .184,.0676,.0248,.00912,.00335,.001/
      END
```

```
      BLOCK DATA CONSTS
      COMMON /ISCLR/ IPBLDG,IREFLC,ISUM,IY,NDET,NES,NEXT,NGRP,NHIST,
     .               NHISTA,NHISTE,NIPT,NOUT,NPG,NTYPE,NUSOR
      COMMON /RSCLR/ ABP,AMODI,ARHO,AXIS,CALPH,CBETA,CF,CGAM,CONST,
     .               DLONG,GMU,GMUS,SMEV,SMVAL,SWP,TM,UIST,UP,VP,WATE,
     .               WEIGHT,WP,YEAR
      DATA           NIPT,NOUT,CF,DLONG,SMVAL,YEAR/5,6,30,48,1.0E+5,
     .               1.0E-5,8.766E+3/
      DATA           ISUM/1/
      DATA           NGRP/10/
      DATA           IY/81765937/
      END
```

```
      SUBROUTINE TRAND (R1,R2,I1,R3,R4)
C
C        DUMMY SUBROUTINE
C
C        NOT USED IN THIS VERSION OF SKYSHN II
C
      RETURN
      END
```

```
      SUBROUTINE DREFL (R1,R2,R3,I1,I2,R4,R5)
C
C        DUMMY SUBROUTINE
C
C        NOT USED IN THIS VERSION OF SKYSHN II
C
      RETURN
      END
```

```
      SUBROUTINE REFL (R1,R2,R3,R4,I1,R5,R6,R7,R8,R9)
C
C        DUMMY SUBROUTINE
C
C        NOT USED IN THIS VERSION OF SKYSHN II
C
      RETURN
      END
```

APPENDIX D: UTILIZING THE QADMOD/SKYSHINE PROCEDURES FOR CALCULATION OF THE EFFECTS OF STRUCTURE DESIGN ON GAMMA-RAY DOSE RATES

The QADMOD (Ref. 9) and SKYSHINE computer procedures are well suited for implementation in the evaluation of gamma-ray dose rates at locations within the vicinity of the turbine building of a BWR which results from the gamma-rays emitted by the ^{16}N sources present inside the pipes and associated equipment contained within the steam turbine building. Because a radiation source may not be represented in SKYSHINE with a detailed three-dimensional model, it is often desirable or necessary to make a detailed model of the component for use in a point kernel code such as QADMOD. Point kernel calculations are made to determine an equivalent point source for use in SKYSHINE. Using this method of determining the source strength for SKYSHINE point sources, the source volume and the self-attenuation provided by the pipes and equipment may be considered in depth.

A coupled QADMOD/SKYSHINE analysis of the dose rates resulting from ^{16}N may require a detailed and somewhat complex procedure. Many parameters influence the results of such an analysis and numerous studies appear in the open literature which address various aspects of the problem. It is not the intent of the author at this time to address, in any great detail, the mass of available information which may be regarded as guidelines or suggested procedures for the successful completion of such an arduous task. Instead, the intent is to provide guidelines for one such computational procedure and to encompass within this discussion the more important restrictions imposed upon the analysis due to specific limitations resulting from the use of the two computer programs QADMOD and SKYSHINE. The computational method to be discussed is one which has been successfully employed in just such an analysis, the results of which are given in Analysis of N-16 Radiation Measurements at the Cooper Nuclear Station (Ref. 13). It should be noted that this discussion pertains to only one possible solution to the problem and in no way is intended to address the validity (or lack thereof) of other possible computational procedures.

The most important restriction results from the use of the SKYSHINE-II program. This code is in an interim stage of development, and at its present level, the SKYSHINE-II code cannot treat any interactions between the emitted radiation and the non-void structure walls which surround it. That is to say, transmission and reflection by the building walls are not accounted for. Therefore, for cases in which the effects of structure geometry must be addressed with respect to wall transmitted/reflected radiation, the original version of SKYSHINE must be employed. Consequently, most of the following discussion is directed toward the implementation of the SKYSHINE-I program.

The QADMOD point kernel code is well suited for performing line-of-sight dose rate calculations involving volumetric sources and discrete receiver locations utilizing complex three-dimensional models. The ability of the program to accept such complex geometrical models makes the code very useful in determining equivalent point source configurations which are representative of the actual volumetric sources of ^{16}N radiation found within components of the turbine equipment. Predominant sources of ^{16}N gamma radiation are often located within moisture separators, reheaters, high and low pressure turbines, and the various steam lines positioned above the operating floor. When attempting to construct an equivalent point source representation of volumetric sources, many factors must be considered. The primary purpose is to obtain a point source configuration which when employed by the SKYSHINE program will produce realistic values for the scattered dose rate reaching the detectors of interest. As a by-product of this procedure, the point source strength should account for the self-attenuation of the emitted radiation by the various structural components found within the turbine building.

Quite often it is most useful, with respect to the QADMOD calculations, to model the entire turbine operating floor as one geometrical module. Although this results in a somewhat complicated model, it is extremely flexible for application to various detector locations. However, there are practical limitations. In many cases, involving extremely

complex assemblies, it may be sufficient to homogenize several regions of varying composition into one. An application of this procedure is demonstrated in Ref. 13 with respect to the moisture separators. The diagram in Fig. D1 represents an end section cut of the QADMOD model for moisture separator 1C (taken from Ref. 13). In Table DI are shown the compositions of the various regions making up the moisture separator. It should be noted that volume regions 166, 170 and 174 contain a mixture of steam and iron, representing a homogenization of a more complex geometry.

TABLE DI. REGION COMPOSITIONS FOR MOISTURE SEPARATORS
(taken from Ref. 13)

REGION NUMBER	DENSITIES (gm/cm^3) STEAM	IRON
38	---	7.8
96	0.00665	---
138	0.874	---
166	0.00869	0.168
170	0.00665	0.168
174	0.00823	0.168

A QADMOD problem may describe a complex three-dimensional source by a series of volumes, each containing a point isotropic source with a unique source strength. However, it may be sufficient that the associated source in a SKYSHINE problem be defined by a single point isotropic source. For example, consider the high pressure turbine arrangement described in Ref. 13, a QADMOD diagram of which is shown in Fig. D2. The shaded area is iron, whereas the chambers #1 through #6 contain steam. Sources of ^{16}N radiation are present within the steam; therefore, the chambers may be described with six separate source volumes in the QADMOD analysis. Table DII indicates that only one point source was employed in the corresponding SKYSHINE model for the high pressure turbine. The reduction process from a complex QADMOD model with multiple source volumes to an equivalent SKYSHINE source consisting of a single source point follows as discussed below.

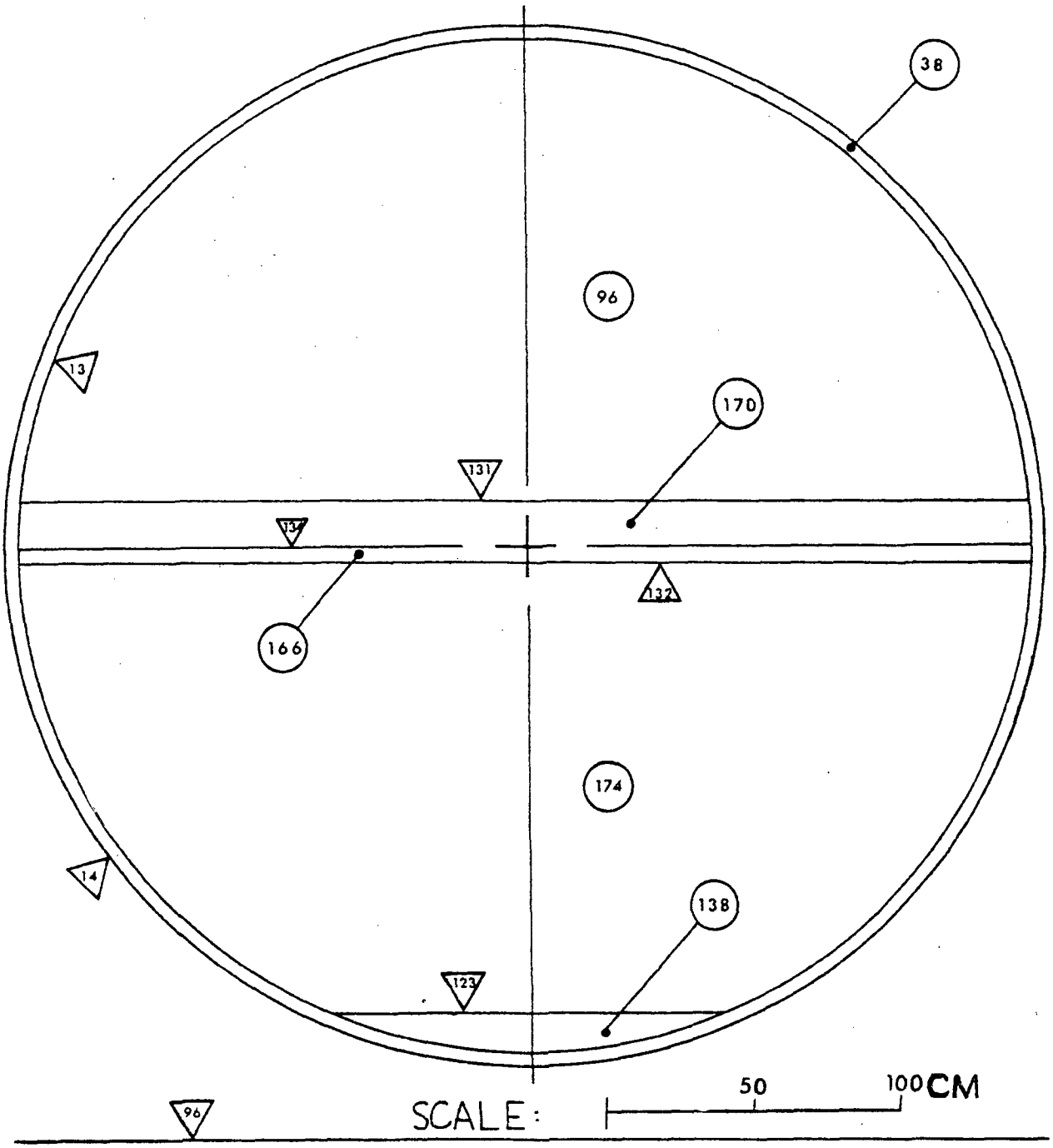

Fig. D1. QADMOD Model of Moisture Separator 1C
(Taken from Ref. 13)

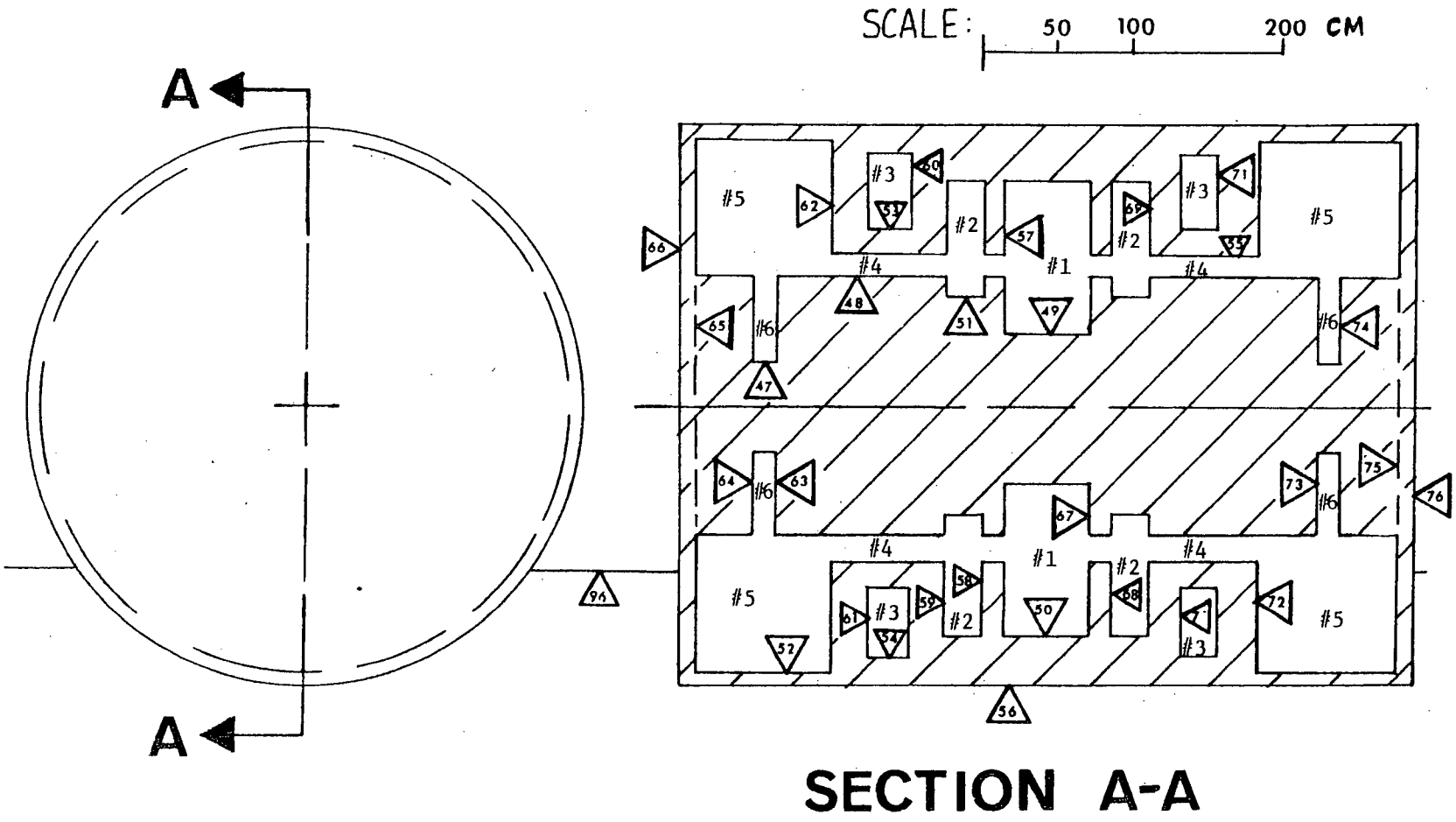

Fig. D2. QADMOD Model of the High Pressure Turbine
(Taken from Ref. 13)

TABLE DII. POINT ISOTROPIC SOURCE DATA FOR INPUT IN SKYSHINE CALCULATIONS
(Taken from Ref. 13)

SOURCE POINT	COORDINATES (cm) X	Y	Z	SOURCE STRENGTH (photons/sec)
MOISTURE SEPARATOR 1A POINT 1	-1664.2	-914.4	213.36	1.03+11
MOISTURE SEPARATOR 1A POINT 2	-1382.8	-914.4	213.36	8.47+10
MOISTURE SEPARATOR 1A POINT 3	-1101.4	-914.4	213.36	6.21+10
MOISTURE SEPARATOR 1A POINT 4	-820.0	-914.4	213.36	7.59+10
MOISTURE SEPARATOR 1B POINT 1	820.0	-914.4	213.36	9.91+10
MOISTURE SEPARATOR 1B POINT 2	1101.4	-914.4	213.36	8.15+10
MOISTURE SEPARATOR 1B POINT 3	1382.8	-914.4	213.36	5.97+10
MOISTURE SEPARATOR 1B POINT 4	1664.2	-914.4	213.36	7.30+10
MOISTURE SEPARATOR 1C POINT 1	-1664.2	914.4	213.36	1.03+11
MOISTURE SEPARATOR 1C POINT 2	-1382.8	914.4	213.36	8.47+10
MOISTURE SEPARATOR 1C POINT 3	-1101.4	914.4	213.36	6.21+10
MOISTURE SEPARATOR 1C POINT 4	-820.0	914.4	213.36	7.59+10
MOISTURE SEPARATOR 1D POINT 1	820.0	914.4	213.36	9.91+10
MOISTURE SEPARATOR 1D POINT 2	1101.4	914.4	213.36	8.15+10
MOISTURE SEPARATOR 1D POINT 3	1382.8	914.4	213.36	5.97+10
MOISTURE SEPARATOR 1D POINT 4	1664.2	914.4	213.36	7.30+10
MOISTURE SEPARATOR 1A INLET PIPE	-508.6	-914.4	213.36	9.66+9
MOISTURE SEPARATOR 1B INLET PIPE	508.6	-914.4	213.36	9.29+9
MOISTURE SEPARATOR 1C INLET PIPE	-508.6	914.4	213.36	9.66+9
MOISTURE SEPARATOR 1D INLET PIPE	508.6	914.4	213.36	9.29+9
CROSSOVER PIPE LPT #1 POINT A	-575.31	-731.5	655.32	9.21+9
CROSSOVER PIPE LPT #1 POINT B	-575.31	-365.8	655.32	9.21+9
CROSSOVER PIPE LPT #1 POINT C	-575.31	0.0	655.32	9.34+9
CROSSOVER PIPE LPT #1 POINT D	-575.31	365.8	655.32	9.38+9
CROSSOVER PIPE LPT #1 POINT E	-575.31	731.5	655.32	9.10+9
CROSSOVER PIPE LPT #2 POINT A	575.31	-731.5	655.32	8.86+9
CROSSOVER PIPE LPT #2 POINT B	575.31	-365.8	655.32	8.86+9
CROSSOVER PIPE LPT #2 POINT C	575.31	0.0	655.32	8.99+9
CROSSOVER PIPE LPT #2 POINT D	575.31	365.8	655.32	9.02+9
CROSSOVER PIPE LPT #2 POINT E	575.31	731.5	655.32	8.75+9
CROSSOVER PIPE 1A POINT 1	-1075.4	-914.4	655.32	7.09+9
CROSSOVER PIPE 1A POINT 2	-742.0	-914.4	655.32	6.98+9
CROSSOVER PIPE 1B POINT 1	1075.4	-914.4	655.32	6.82+9
CROSSOVER PIPE 1B POINT 2	742.0	-914.4	655.32	6.71+9
CROSSOVER PIPE 1C POINT 1	-1075.4	914.4	655.32	7.09+9
CROSSOVER PIPE 1C POINT 2	-742.0	914.4	655.32	6.98+9
CROSSOVER PIPE 1D POINT 1	1075.4	914.4	655.32	6.82+9
CROSSOVER PIPE 1D POINT 2	742.0	914.4	655.32	6.71+9
MAIN STEAM LINE + POINT 1	-2178.7	308.0	213.36	3.10+10
MAIN STEAM LINE + POINT 2	-1826.9	308.0	213.36	2.58+10
MAIN STEAM LINE - POINT 1	-2178.7	-308.0	213.36	3.10+10
MAIN STEAM LINE - POINT 2	-1826.9	-308.0	213.36	2.58+10
*HIGH PRESSURE TURBINE	-1457.25	0.0	106.68	1.02+10
LOW PRESSURE TURBINE #1	-575.31	0.0	106.68	1.29+10
LOW PRESSURE TURBINE #2	575.31	0.0	106.68	1.24+10

The calculational process utilized by QADMOD involves representing a volume-distributed source of radiation by a number of point isotropic sources and computing the distances through all geometric regions traversed by the line-of-sight from the source point to a desired receiver point. Based upon the distances through the regions and the characteristics of the materials within them, energy-dependent exponential attenuation factors and energy-dependent buildup factors are employed in order to calculate the direct gamma-ray dose and the gamma-ray dose with buildup. For each source energy group, i, the uncollided gamma-ray dose rate is computed as a point kernel numerically integrated throughout the source region

$$D_{u\gamma_i} = \sum_{\substack{\ell=1 \\ m=1 \\ n=1}}^{L,M,N} \frac{E_i K_i S_{\ell,m,n}}{4\pi\rho^2_{S_{\ell,m,n}}} e^{-x_i}$$

where

$$x_i = \sum_{m_o=1}^{M_o} \sum_{h=1}^{H} \rho_h \theta_{m_o h} \Sigma_{m_o i}$$

for each of the (ℓ, m, n) source sub-volumes. The triple summation (over L, M, N) represents an integration through the three-dimensional source region. Each of the variables are defined as follows:

$D_{u\gamma_i}$ = the detector response without buildup

K_i = a conversion factor (e.g. flux-to-dose)

E_i = the source strength of the ith energy group

$S_{\ell,m,n}$ = the volume weighted power associated with the (ℓ, m, n) source point

$\rho_{S_{\ell,m,n}}$ = the geometric distance from the (ℓ, m, n) source point to the detector point

ρ_h = the path length through the hth composition along the source-detector line

$\Sigma_{m_o i}$ = the gamma-ray attenuation coefficient of the m_oth material for the ith energy group

$\theta_{m_o h}$ = the fractional density or absolute density of material m_o in composition h depending upon the units of $\Sigma_{m_o i}$

The total gamma-ray dose rate is then given by

$$D_{\gamma_i} = B_i \, D_{u\gamma_i}$$

where B_i is the dose buildup factor for a mean-free-path distance x_i.

An equivalent point source strength for the entire volume distributed source may be obtained from the equation

$$S'_i = 4\pi r^2 \cdot D_{\gamma_i}/K_i$$

$$S'_i = 4\pi r^2 \cdot \frac{\sum_{\substack{\ell=1 \\ m=1 \\ n=1}}^{L,M,N} B_i E_i S_{\ell,m,n} \quad e^{-x_i}}{4\pi\rho^2_{S_{\ell,m,n}}}$$

where r is the separation distance between the hypothetical point source and the detector. Inclusion of the conversion factor K_i in the denominator ensures the proper units (photons/sec) for the source term S'_i. Note that the geometric separation of the receiver and equivalent point source, r, may not necessarily equal the separation of the receiver and the geometric center of the actual source subvolumes, $\rho_{S_{\ell,m,n}}$. Indeed it is usually convenient to place the equivalent point source at (or near for complex geometries) the center of the entire source assembly which it is intended to represent. Proceeding in this manner with respect to the high pressure turbine configuration shown in Fig. D2, the summation in the above equation would cycle through each of the six source subvolumes.

The objective of this endeavor is to obtain an equivalent point source strength representative of the volume-distributed source. In order to validate the point source representation, the variation of the function $S'_i(r)$ may be examined. Consider for the moment a single

point source and detector embedded within a three-dimensional geometry. The variation in $S'_i(r)$, along a discrete direction (Fig. D3), will reflect only the additional attenuation (or reduction thereof) $e^{-\Delta x_i}$ resulting from a displacement of the detector (since in this case, the hypothetical separation r is equivalent to the actual separation ρ). Note that the change in attenuation is with respect to the medium which contains the detector. In a QADMOD/SKYSHINE analysis, this medium will be air. The magnitude of the attenuation provided by a slight increase in air volume between point source and detector should be small compared to the overall attenuation provided by the structural components of the building of interest. Hence, for an ideal point source, $S'_i(r)$ should be a slowly varying function, approaching a constant value.

An additional factor must be considered with respect to a complex QADMOD model involving volume-distributed sources, namely the variation in the ratio $r^2/\rho^2_{S_{\ell,m,n}}$ for each source subvolume. This quantity should approach unity for representative point source configurations. Therefore, an examination of this result and those of the previous paragraph indicate that the function $S'_i(r)$ should approach a constant value for adequately defined equivalent point sources. When performing such a sensitivity analysis for asymmetric systems, it must be remembered to calculate $S'_i(r)$ along a discrete direction. An alteration in the angular orientation of the source-receiver line-of-sight may result in the line-of-sight passing through vastly different portions of the structural components which provide the maximum radiation attenuation (Fig. D4).

As stated above, for cases in which the source/shield geometry is asymmetric, there may exist a strong dependence of the equivalent point source strength upon the relative location of the detector (i.e., with respect to the angular orientation of the source-receiver line-of-sight). In such cases, specification of the detector's angular location becomes a dominate factor. The selection of appropriate detector locations must be based upon several factors. Note that the primary goal in using QADMOD is to obtain a point source configuration which when employed by the SKYSHINE code will produce realistic values for the scattered dose rate reaching the

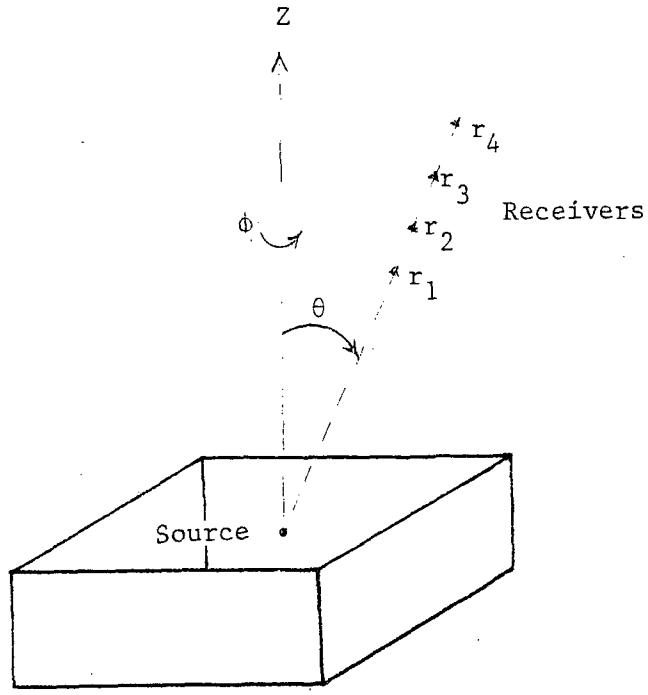

Fig. D3. Linear Variation in Equivalent Point Source Strength

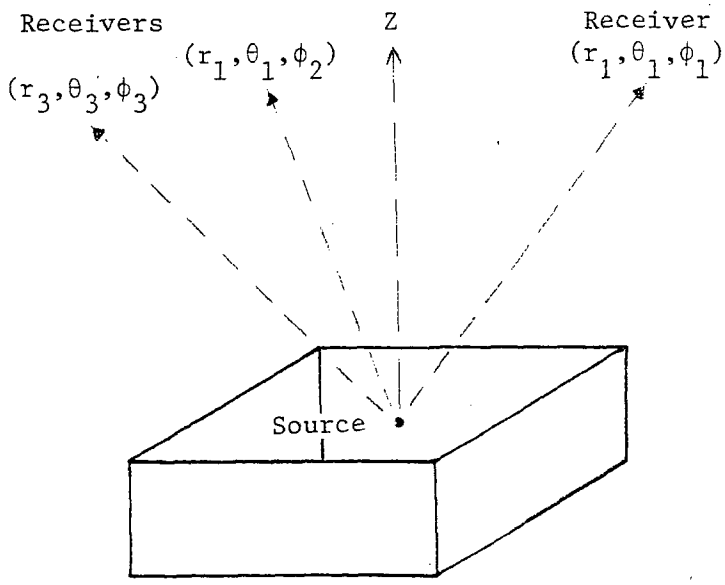

Fig. D4. Angular Variation in Equivalent Point Source Strength

SKYSHINE detectors of interest. Since the QADMOD calculations are for discrete directions, an averaging process must be employed in order to obtain a generalized source term suitable for use in the subsequent SKYSHINE analysis.

A first approximation for the generalized source term may be obtained by averaging the equivalent point source strengths extracted from discrete detectors, as previously discussed, over the solid angle of emission which will contribute the most to the scattered dose rate reaching the SKYSHINE detectors. When specifying the angular distribution of the discrete detector locations in the QADMOD analysis, consideration must be given to the proposed receiver locations to be employed in the ensuing SKYSHINE analysis. For example, consider a simplified building structure such as that used for the ANS-6.6.1 reference calculation I.2 (Fig. 8), within which a complex source assembly is positioned. With respect to SKYSHINE receivers positioned a sufficient distance from the building, the dominate source of scattered radiation can be attributed to that radiation which emanates through the shieldless roof. Hence, for such a configuration, the averaging process should encompass the solid angle subtended by the roof, measured from the equivalent point source. The QADMOD analysis would employ a set of detectors positioned above the roof of the structure. (Such was the case in the analysis discussed in Ref. 13). From each detector, an equivalent point source strength is obtained, and a generalized source term is calculated by averaging over the individual source strengths.

If receiver locations in a subsequent SKYSHINE problem were positioned near one of the shield walls, a major component of the scattered radiation reaching the detector may be attributed to radiation emerging through the shield wall closest to the detector. In such cases, preliminary QADMOD calculations should involve an averaging of the equivalent point source strengths over the solid angle of emission subtended by the shield wall closest to the SKYSHINE receiver. It is obvious that for extremely sensitive problem configurations, it may be difficult to obtain a generalized source term applicable to all detector locations of interest. Therefore, it may become necessary to perform the overall analysis in segments (e.g., close-in detectors in one and far-away detectors in another).

In many cases, it may not be possible to pre-determine the most important solid angle of emission with respect to a specified set of SKYSHINE receivers. When these situations occur, it is advisable to make a "best guess" and proceed through the QADMOD/SKYSHINE analysis. A "best guess" may be based upon several factors, e.g.

(1) a large opening (void) in a particular wall (or roof)

(2) a wall section (or roof) providing minimal direct attenuation (with respect to mean-free-path thickness)

for SKYSHINE receivers located close to the structure

(3) the wall (or roof) closest to the detector.

The SKYSHINE program records the scattered radiation at a receiver as a function of the structure wall through which the radiation emanated. Therefore, an examination of the SKYSHINE results should reveal whether or not the major contribution to the scattered dose did indeed result from radiation emerging through the structure wall (or roof) which was the basis for the "best guess" in QADMOD. If there is a discrepancy at this point, it would be advisable to repeat the QADMOD/SKYSHINE analysis using the structure wall which contributed most in the preliminary SKYSHINE results as the basis for averaging the source terms from QADMOD in the revised analysis.

Several procedures may be employed in conjunction with the QADMOD calculations for averaging the source term over a specified solid angle of emission. The following method was used in the analysis discussed in Ref. 13. A structure wall (or roof), or portion thereof, is chosen as defining the most important solid angle of emission with respect to the leakage from the structure, as seen by a specified set of detectors. An examination of the variation in $S'_i(r)$ along discrete directions reveals an appropriate separation distance for the equivalent point source with respect to a few chosen detectors located within the defined solid angle of interest. As previously stated, the function of $S'_i(r)$ will vary with the detector's angular orientation for asymmetric geometries. A generalized source strength for the point source to be used in SKYSHINE may be obtained from an average evaluated by the integral equation

$$\overline{S}_i = \frac{\int_{\theta_{min}}^{\theta_{max}} S'_i(\theta)\, d\theta}{\theta_{max} - \theta_{min}}$$

where $S'_i(\theta)$ is the equivalent point source strength, obtained from the QADMOD analysis, for a specific source point (representing a volume distributed source assembly) measured from a set of QADMOD detectors located within the defined solid angle of interest. The independent variable, θ, is the polar angle between a vertical through the coordinates of the equivalent point source and the line-of-sight connecting the source and receiver (Fig. D3). Hence, the function $S'_i(\theta)$ represents the angular variation in the apparent leakage source measured along discrete directions. The cutoff angles θ_{max} and θ_{min} may be obtained from a knowledge of the source point coordinates and the geometry of the building structure.

In the above discussion, the source function $S'_i(\theta)$ was assumed to be symmetric with respect to the azimuthal position ϕ of the detector about the vertical through the point source in question (Fig. D4). This assumption may be unacceptable in many cases. It then becomes necessary to average the azimuthal variation of the function (now denoted by $S'_i(\theta,\phi)$) before evaluating the integral equation given above. This average may be obtained through a simple process, namely

$$S'_i(\theta) = \frac{1}{N} \sum_{n=1}^{N} S'_i\ (\theta,\phi_n)$$

where N indicates the total number of discrete point source strengths evaluated for a specific polar angle θ. A more sophisticated procedure would involve a weighting function ω_n such that

$$S'_i(\theta) = \frac{1}{N} \sum_{n=1}^{N} S'_i(\theta,\phi_n) \cdot \omega_n.$$

When evaluating the integral equation, it is often convenient to recall from elementary calculus, that the integral

$$\int_{\theta_{max}}^{\theta_{min}} S'_i(\theta)\, d\theta$$

is equal to the area under the curve $S'_i(\theta)$. Therefore, it is possible to obtain an estimate for the integral simply by plotting the function $S'_i(\theta)$ and calculating the area which lies under the resulting curve. Various methods are available for performing such a calculation (a planimeter was employed in the case of Ref. 13). The total number of discrete detector locations used in the QADMOD analysis of the generalized source term may be based upon the desired degree of resolution in the graphical presentation of $S'_i(\theta)$. Note that the average source strength resulting from this process, $\overline{S}_i$, is the point source strength to be used in an ensuing SKYSHINE problem.

As stated at the outset of this discussion, the original version of SKYSHINE may prove more beneficial in an analysis of the effects of structure geometry upon the dose rate at detectors positioned outside of a turbine building resulting from the ^{16}N sources present within the structure. In this situation, the nuclear characteristics of the ith energy group in the QADMOD analysis are representative of the 6.2 MeV gamma radiation to be utilized in SKYSHINE. If the effects of spectral emission and transmission are to be considered, the new program SKYSHINE-II may be employed. In this case, the entire process described herein may be repeated to generate $\overline{S}_i$ for various energies in order to construct a leakage spectrum. If SKYSHINE-II is to be used in the final analysis, it must be remembered that the interim version, as described in this report, considers only that fraction of the emitted radiation which emanates through voids in the structure geometry.

A major concern which exists whenever one utilizes the QADMOD buildup factor technique to account for the scattered radiation component is that the QADMOD program allows for only one material buildup factor to be used during a calculation. In QADMOD, the total gamma-ray dose rate at a receiver is given by the equation

$$D_{\gamma_i} = B_i \, D_{u\gamma_i}$$

where B_i is the dose buildup factor, characteristic of only one material (of the user's choice), applied along the total mean-free-path distance x_i which separates source point and receiver. For geometries which encompass several regions of various material compositions, the question arises as to which material to designate for buildup. Several works have been published which address the applicability of buildup factors to multi-slab geometries. However, a few guidelines should suffice for most situations. A first approximation may be obtained by selecting the material which constitutes the largest mean-free-path thickness along designated directions.

If there are several materials of comparable mean-free-path thickness, choose the one nearest the detector. In some cases, it may be necessary to perform a sensitivity analysis with respect to the question of buildup; in which case water and lead should produce a maximum and minimum effect, respectively (this statement assumes the choice of materials is restricted to the internal data available in QADMOD: water, concrete, lead, and iron).

Although the entire turbine operating floor may be modeled as one geometrical module for use in a QADMOD calculation, it often proves beneficial to segment the structure geometry into separate problem configurations for use in the SKYSHINE analysis. Consider, for example, the structure geometry used in Ref. 13. A schematic of the turbine operating floor is shown in Fig. D5. The ^{16}N sources of gamma radiation were assumed to be located within the four moisture separators (designated 1A, 1B, 1C, and 1D), the high and low pressure turbines, and the various steam lines positioned above the operating floor. Within Fig. D5, the hatched areas indicate locations of the building walls and the concrete shields around the four moisture separators. The QADMOD model of the structural components is shown in Fig. D6, omitting the more complex internal source assemblies.

The SKYSHINE program requires that the turbine building be modeled as a simple rectangular structure containing point isotropic sources and that the detectors be located outside the structure. Since the geometry of the turbine operating floor contains a very complex system of sources

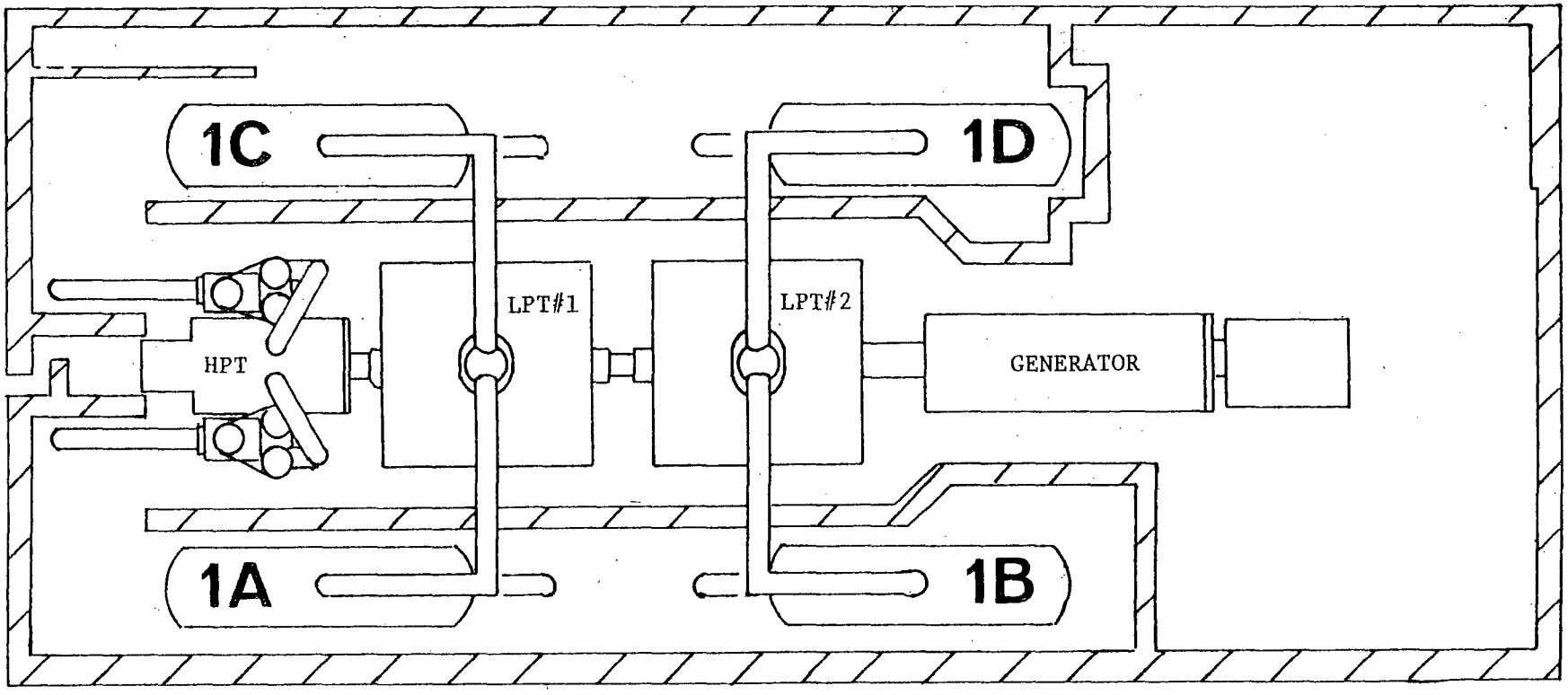

Fig. D5. Turbine Operating Floor Plan View
(Taken from Ref. 13)

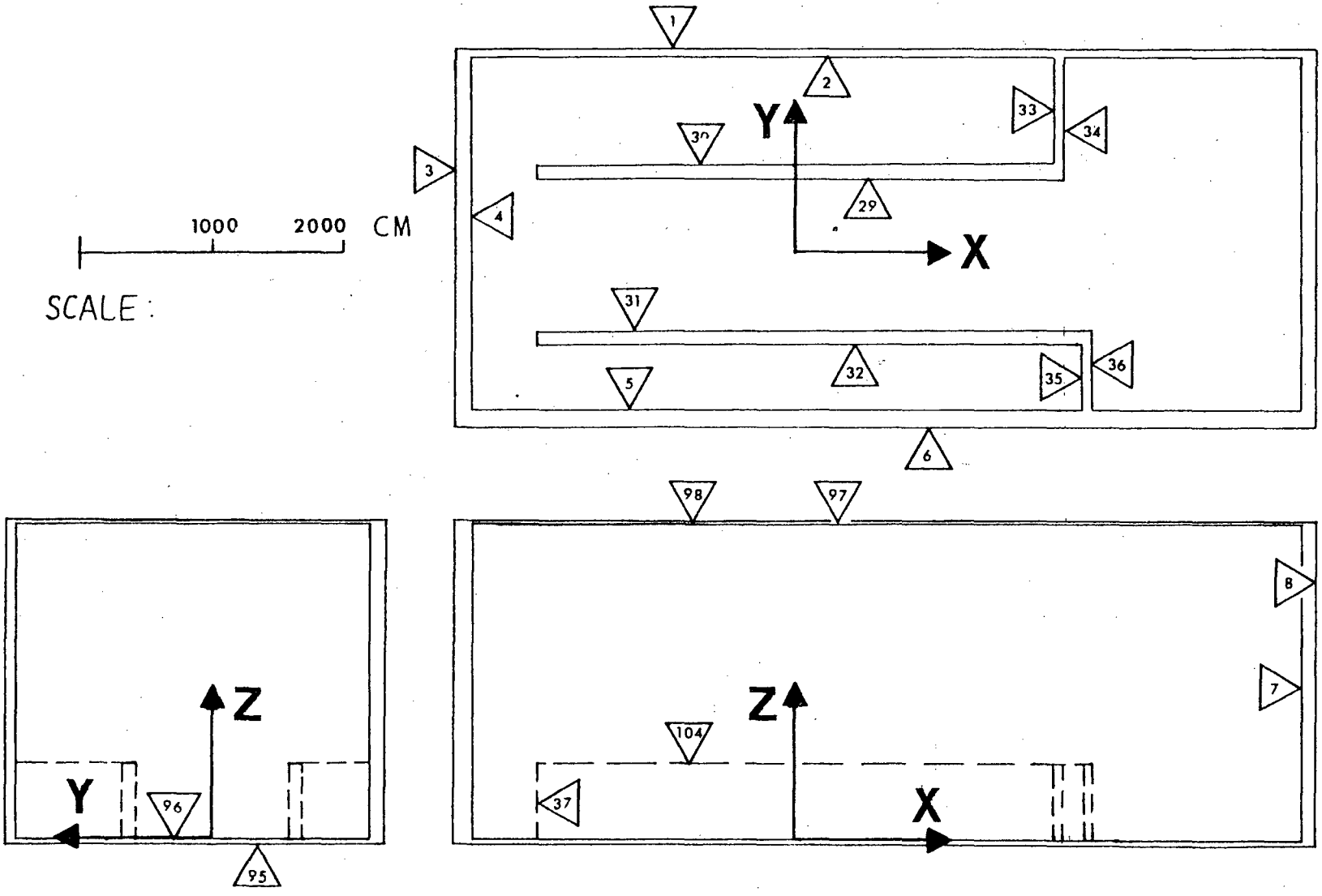

Fig. D6. QADMOD Model of Turbine Floor Structure
(Taken from Ref.13)

and shield walls, four structure models were needed to adequately describe the turbine building for use in SKYSHINE. The structure model shown in Figure D7 was used when calculating the dose rates produced by ^{16}N sources contained in moisture separators 1A, 1B and their inlet pipes. A similar model was used for moisture separators 1C and 1D (Fig. D8). Dose rates resulting from sources contained in the low pressure turbine crossover pipes and the moisture separator crossover pipes employed the model shown in Figure D9. Evaluation of dose rates produced by ^{16}N sources contained in the high pressure turbine, low pressure turbine, and their inlet pipes made use of the structure model shown in Figure D10.

In conclusion, it is apparent from the discussion presented that many complicated questions may arise while attempting to complete a detailed analysis of the radiation leakage experienced by a building housing radiation sources. While this task may require a substantial endeavor on the part of the participants, the computer programs QADMOD and SKYSHINE provide in many situations a flexible tool to aid in the completion of this work.

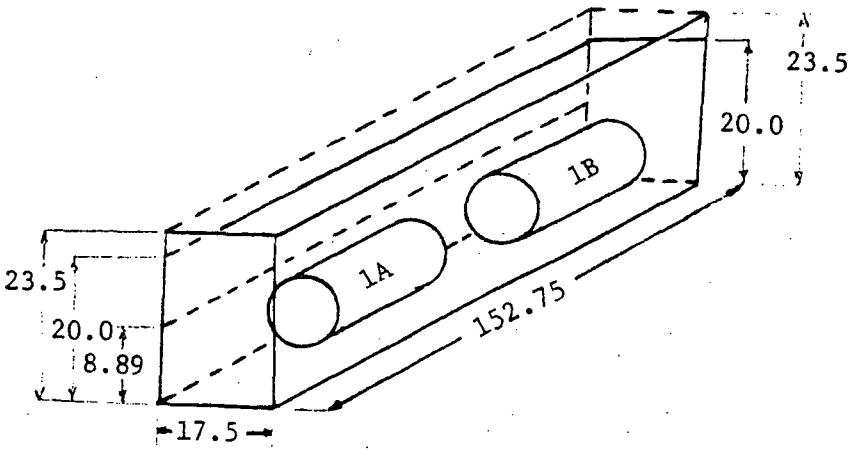

Fig. D7. SKYSHINE Model 1 for Turbine Building when Treating Moisture Separators 1A and 1B (Taken from Ref. 13)

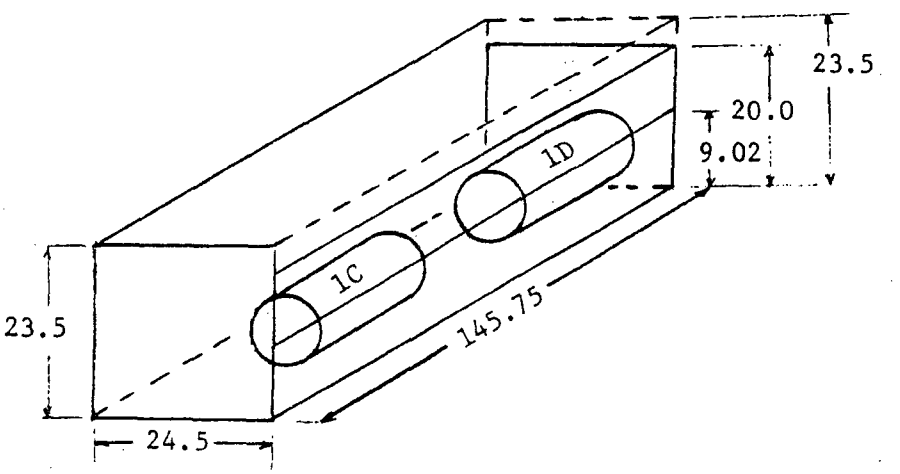

Fig. D8. SKYSHINE Model 2 for Turbine Building when Treating Moisture Separators 1C and 1D (Taken from Ref. 13)

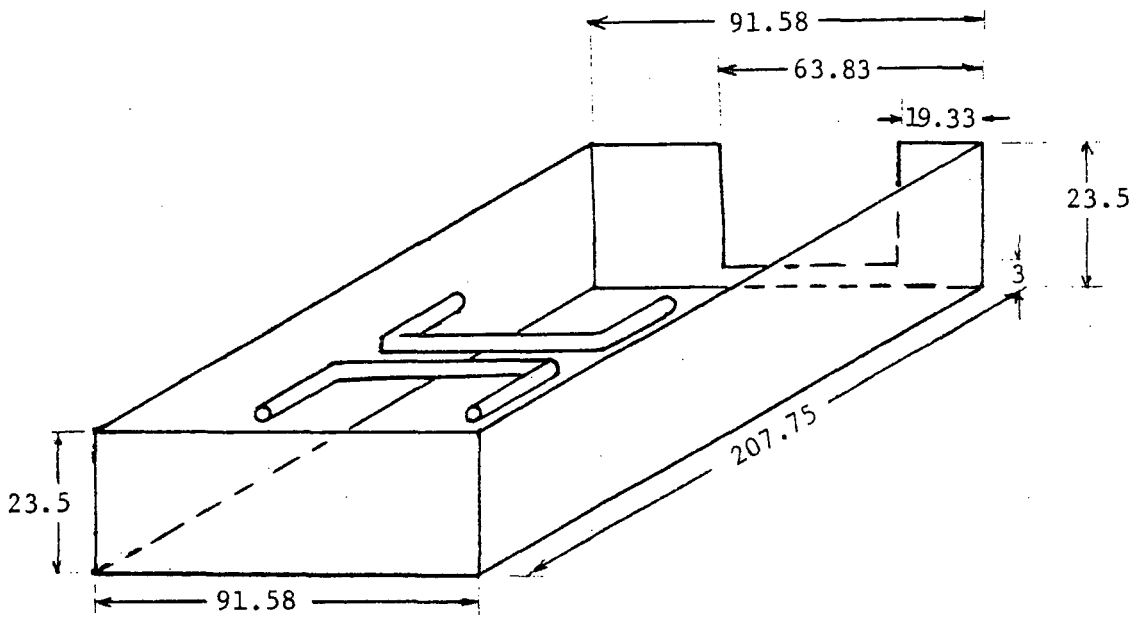

Fig. D9. SKYSHINE Model 3 for Turbine Building when Treating Crossover Piping (Taken from Ref. 13)

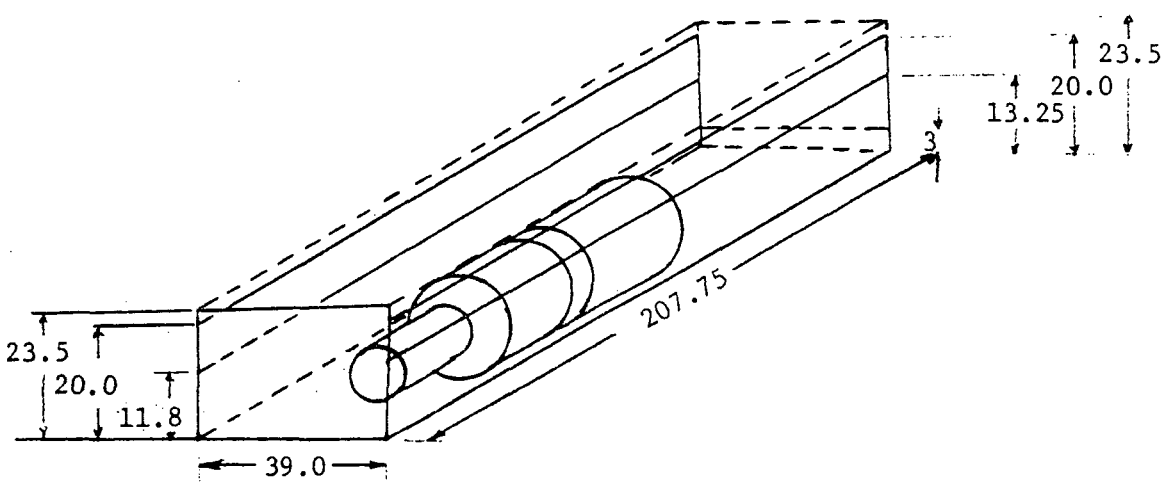

Fig. D10. SKYSHINE Model 4 for Turbine Building when Treating Turbines and Main Steam Lines (Taken from Ref. 13)

RE

DISTRIBUTION

No. of Copies	
	Offsite
5	Radiation Shielding Information Center (RSIC), Oak Ridge, TN 37830
10	Radiation Research Associates, Inc. 3550 Hulen Street Fort Worth, TX 76107
	US NRC
119	Standard Distribution under RE
1	W. Kreger, DSE/NRR
1	R. W. Houston, AAB/DSE/NRR
1	L. Soffer, AAB/DSE/NRR
1	J. Collins, ETSB/DSE/NRR
1	F. Congel, RAB/DSE/NRR
1	T. Murphy, RAB/DSE/NRR
1	S. Acharya, RAB/DSE/NRR
1	C. Hinson, RAB/DSE/NRR
1	L. Barrett, EEB/DOR/NRR
1	R. Emch, EEB/DOR/NRR
1	K. Steyer, FPSSB/SD
1	R. Alexander, OHSB/SD
1	C. Bartlett, SAFER/RES
1	L. Rouse, FCPF/NMSS

NRC FORM 335 (7-77)

U.S. NUCLEAR REGULATORY COMMISSION

BIBLIOGRAPHIC DATA SHEET

1. REPORT NUMBER (Assigned by DDC)
NUREG/CR-0781
RRA-T7901

4. TITLE AND SUBTITLE (Add Volume No., if appropriate)
The SKYSHINE-II Procedure: Calculation of the Effects of Structure Design on Neutron, Primary Gamma-Ray and Secondary Gamma-Ray Dose Rates in Air

2. (Leave blank)

3. RECIPIENT'S ACCESSION NO.

7. AUTHOR(S)
C. M. Lampley

5. DATE REPORT COMPLETED
MONTH: January YEAR: 1979

9. PERFORMING ORGANIZATION NAME AND MAILING ADDRESS (Include Zip Code)
Radiation Research Associates, Inc.
Fort Worth, Texas 76107

DATE REPORT ISSUED
MONTH: March YEAR: 1979

6. (Leave blank)

8. (Leave blank)

12. SPONSORING ORGANIZATION NAME AND MAILING ADDRESS (Include Zip Code)
Division of Site Safety & Environmental Analysis
Office of Nuclear Reactor Regulation
U.S. Nuclear Regulatory Commission
Washington, D. C. 20555

10. PROJECT/TASK/WORK UNIT NO.

11. CONTRACT NO.
NRC-03-78-175

13. TYPE OF REPORT
Technical

PERIOD COVERED (Inclusive dates)

15. SUPPLEMENTARY NOTES

14. (Leave blank)

16. ABSTRACT (200 words or less)

An updated version of the SKYSHINE Monte Carlo procedure has been developed. The new computer code, SKYSHINE-II, provides a substantial increase in versatility in that the program possesses the ability to address three types of point-isotropic radiation sources: 1) primary gamma rays, 2) neutrons, and 3) secondary gamma rays. In addition, the emitted radiation may now be characterized by an energy emission spectrum defined by the user. The enhanced capabilities of the program are the product of a new energy-dependent atmospheric transmission data base developed by Radiation Research Associates, Inc. for each of the three source types described above. Most of the computational options present in the original program have been retained in the new version.

17. KEY WORDS AND DOCUMENT ANALYSIS

17a. DESCRIPTORS

17b. IDENTIFIERS/OPEN-ENDED TERMS

18. AVAILABILITY STATEMENT
Unlimited

19. SECURITY CLASS (This report)
Unclassified

20. SECURITY CLASS (This page)
Unclassified

21. NO. OF PAGES

22. PRICE
$

UNITED STATES
NUCLEAR REGULATORY COMMISSION
WASHINGTON, D. C. 20555

OFFICIAL BUSINESS
PENALTY FOR PRIVATE USE, $300

POSTAGE AND FEES PAID
U.S. NUCLEAR REGULATORY
COMMISSION

U.S. MAIL

120555009410 1 ANRE
US NRC
SD SITE & HEALTH STANDARDS
ASSISTANT DIRECTOR
N-124
WASHINGTON DC 20555