Massachusetts Institute of Technology

Environment, Health & Safety Office
Environmental Programs Office

77 Massachusetts Avenue
Cambridge, Massachusetts
02139–4307

Phone 617–452–3477
Fax 617–258–6831
Email environment@mit.edu
http://web.mit.edu/ehs-ms

~~"Withhold from public disclosure in accordance with 10 CFR 2.390"~~
~~Official Use Only – Security-Related Information~~

August 4, 2010

U.S. Nuclear Regulatory Commission
Office of Nuclear Material Safety and Safeguards
Division of Fuel Cycle Safety and Safeguards
Fuel Facility Licensing Directorate
Washington, D.C. 20555

Attention: Mr. Richard Thompson, Program Manager

The Massachusetts Institute of Technology (MIT) requests to amend our special nuclear material license, SNM-986, to increase our possession limits for specific nuclides to allow for some proposed experiments sponsored by the Domestic Nuclear Detection Office (DNDO).

The following are the specific increases in Item 6 of license #SNM-986 per nuclide:

1. Plutonium: We request an increase in possession limit of Item 6.G from [redacted] to [redacted]. The current [redacted] possession limit is for materials we currently have in storage. We have proposed experiments that will utilize a source from PNNL with a total of [redacted] and a source from LANL with a total of [redacted].
2. HEU enriched to [redacted] in the U-235 isotope: We request a possession limit increase for Item 6.D from [redacted] to [redacted]. We currently have approximately [redacted] in possession. We have a proposed experiment that will utilize a source of HEU from PNNL with a total of [redacted] of U-235.
3. LEU enriched to [redacted] in the U-235 isotope: We request a possession limit of [redacted]. We have a proposed experiment that will utilize a source (square plate) of LEU consisting of [redacted] grams of uranium enriched to [redacted] U-235. We have a second proposed experiment that would utilize a source (unirradiated fuel plate) consisting of [redacted] of uranium enriched to [redacted] U-235.

Locations of Use: The special nuclear material will be stored and used on the [redacted]. The material will be used in [redacted]. Staff from the MIT radiation protection program will be involved during all uses of these materials. The sources will be stored in [redacted] or in [redacted].

Receipt of Material: The special nuclear material will be received at either campus by radiation protection program staff. The material will remain in secured storage when not in use.

Attached are draft safety analysis reports for the use of Plutonium and enriched uranium. I would like to invite NRC representatives to visit our sites to review the storage and use of these materials. All elements of the current MIT Radiation Protection Program such as authorization for use by the MIT Radiation Protection Committee, radiation worker training, worker dosimetry and monitoring, package receipt, inventory control, radiation surveys, and secure storage remain in effect.

Please contact me if you require additional information regarding this license amendment request and to schedule a visit to our facilities. Thank you in advance for your cooperation in this effort to allow these very important experiments to proceed.

Mitchell S. Galanek, CHP
MIT Radiation Protection Officer
Associate Director, EHS
Tel: 617 258-9457
galanek@mit.edu

SAFETY ANALYSIS REPORT

USE OF DHS/DNDO-SUPPLIED SEALED [redacted] SOURCE AT THE MIT-BATES LINEAR ACCELERATOR CENTER

Prepared by:

Peter Chapman (MIT-NED)
Karen Dow (MIT-Bates)
Gordon Kohse (MIT-NED)
David Perticone (L-3/MIT-NED)
Christoph Tschalaer (MIT-Bates)
Vitaliy Ziskin (L-3/MIT-NED)

March 1, 2009Updated for public release: June 11, 2010

Reviewed by:

Gerald Fallon (Bates RSO)
Mitchell Galanek (MIT RSO)

For SNAR use only in accordance with (HSHQDC-08-C-00128). No other use is authorized.

Table of Contents

1. Introduction 1
2. Pu Metal Sealed Source Description 1
3. MCNPX modeling 5
4. Additional calculations 6
5. Planned procedures and precautions 8
6. Summary 9

For SNAR use only in accordance with (HSHQDC-08-C-00128). No other use is authorized.

1. Introduction

MIT (Bates Linear Accelerator Center, Nuclear Reactor Lab, and Nuclear Science and Engineering Department) and L-3 Communications Security and Detection Systems are collaborating to develop an advanced technology demonstration prototype for Shielded Nuclear Alarm Resolution (SNAR) (pronounced "snare"). This system will be capable of distinguishing special nuclear materials (SNM) from both ordinary fissionable material (such as natural uranium) and non-fissionable materials. The program is funded by the Department of Homeland Security (DHS) Domestic Nuclear Detection Office (DNDO). The goal of the program is to design and build a prototype system which will undergo full testing at MIT and a DNDO-selected site.

DNDO has requested a full scale design process which includes experimental measurements and computer simulations. The first three phases (preliminary design, critical design, and system development) will take place at the Bates Laboratory. The L-3/MIT team has previously developed a variable energy neutron source (2-5 MeV) which utilizes a 3 MeV deuteron RFQ accelerator that has been operational at the Bates Lab since 2006. Since the L-3/MIT SNAR system uses a novel neutron interrogation approach to distinguish SNM, it will be vital to perform measurements using the RFQ at Bates Lab. It is crucial to the project to be able to perform measurements with small quantities of SNM during the first three phases of the project. In recognition of this, DNDO has prepared a small source [redacted] for use in the SNAR program. The objective of this document is to demonstrate that source can be used safely at Bates and to request permission to do so.

This safety analysis report considers interrogation of the PSS-001 with a neutron beam from the existing RFQ accelerator and is organized as follows. The first part of the document collects the key information on the source which has been provided by DNDO. The next two sections describe modeling results using the Los Alamos MCNPX radiation transport simulation code and additional calculations based on the modeling results. The final section summarizes precautions and procedures that will be used.

2. [redacted] Sealed Source Description

The sealed source was developed and built by the Pacific Northwest National Laboratory (PNNL). It consists of [redacted]. The metal is in the shape of a disk and is surrounded by three welded layers of material. The Pu is surrounded by a tantalum cup. The cup is surrounded by both a welded inner layer and a welded outer layer of stainless steel. Shown in Figure 1 is a cutaway of the layered assembly of the source. Shown in Figure 2 is the exploded view of the source.

For SNAR use only in accordance with (HSHQDC-08-C-00128). No other use is authorized.

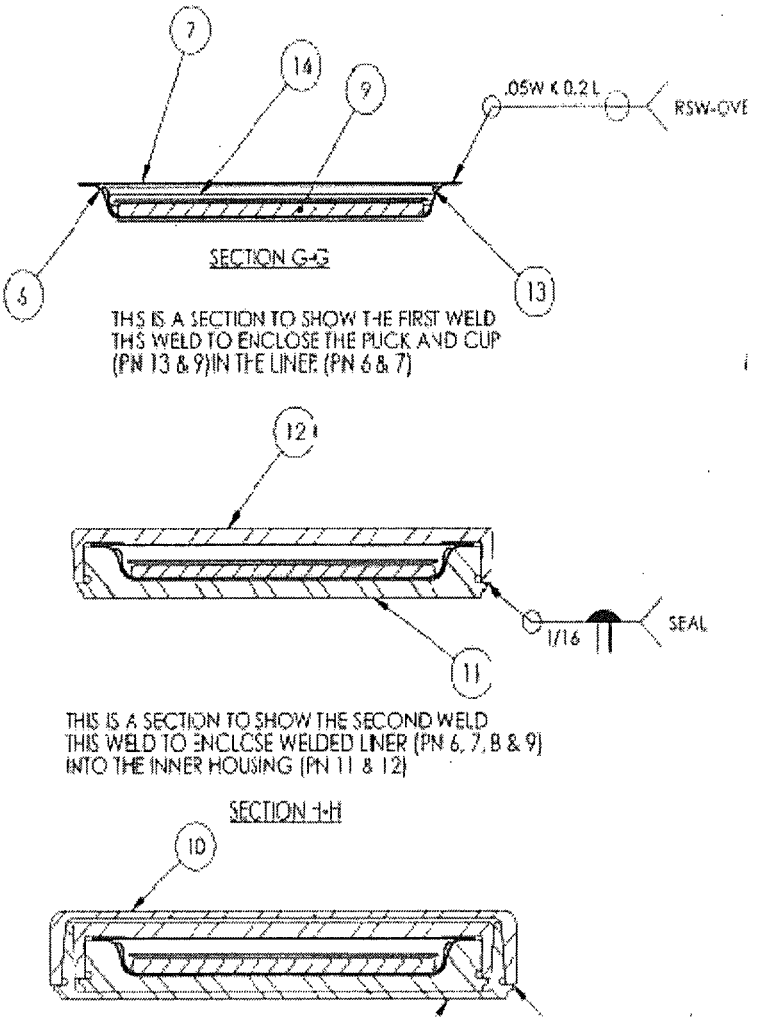

Figure 1. Cut-away view of sealed source.

For SNAR use only in accordance with (HSHQDC-08-C-00128). No other use is authorized.

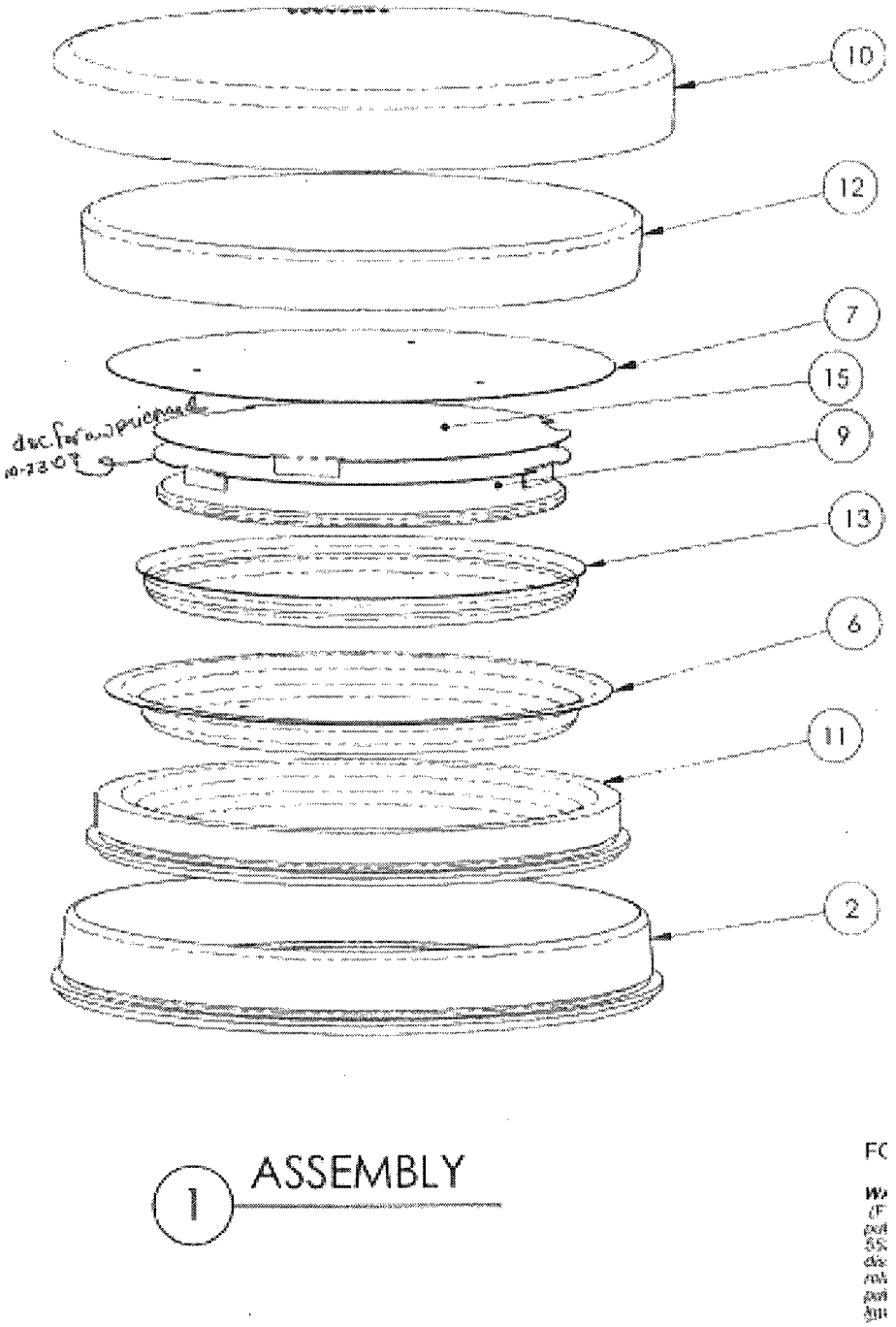

Figure 2. Exploded view of sealed source. [redacted]. Items 7,13,15 and 6 are Ta. The rest are stainless steel.

For SNAR use only in accordance with (HSHQDC-08-C-00128). No other use is authorized.

The source was initially assayed at LLNL in August 1999 and the results are shown in Table 1 below.

Table 1. Initial Assay of Source as of August 13, 1999.

Isotope	Weight fraction (%)	Mass (g)	Activity (Ci)
Pu-238	[redacted]	[redacted]	[redacted]
Pu-239	[redacted]	[redacted]	[redacted]
Pu-240	[redacted]	[redacted]	[redacted]
Pu-241	[redacted]	[redacted]	[redacted]
Pu-242	[redacted]	[redacted]	[redacted]
Am-241	[redacted]	[redacted]	[redacted]
Np-237	[redacted]	[redacted]	[redacted]
Total	[redacted]	[redacted]	[redacted]

While the Pu has substantial activity, it is largely mitigated by the surrounding tantalum and stainless steel case. Measurements of the activity external to the case were made at PNNL in December 2007 using an Eberline RO20 ion chamber. At contact with the case the dose rate was [redacted] and at a distance of 30 cm the dose rate was [redacted]. For comparison, the maximum allowable dose rates in a Radiation Area as defined in 10 CFR Part 20 at various distances from the source are given in Table 2.

Table 2. Maximum dose rate in a Radiation Area

Distance from source		Maximum Radiation Level
(cm)	(inches)	(mrem/hr)
5	1.97	101
30	11.81	4.99
100	39.37	1.8

For SNAR use only in accordance with (HSHQDC-08-C-00128). No other use is authorized.

3. MCNPX modeling

Use of Monte Carlo calculations of nuclear processes dates back to the Manhattan project at Los Alamos. The current state of the art code is MCNPX, which seeks to extend the library based MCNP neutron, photon and electron modeling to all particles at all energies. It is a branch off the MCNP4 code base. Current plans call for MCNPX and MCNP5 to merge into a single code base sometime after 2010. MCNPX has ~2500 users world wide and its primary uses are radiation transport (for example dose rate estimation and shielding) and criticality calculations. This study used MCNPX2.7a, which was the current beta version (released November 2008) at the time the calculations were performed, together with the ENDF-VII database. An MCNPX model was created based on the supplied engineering drawings of the sealed source. The source was exposed to a 6 MeV neutron beam to determine the approximate fission rate expected with use at Bates. The model was then used to evaluate the criticality of the sealed source expressed in units of k_{eff}, the generation to generation neutron multiplication factor.

In construction of the MCNPX model some simplifications were used. The Pu disk is based on the exact dimensions. The gap above the disk was assumed to be the same radial size as the disk. These two items were surrounded by a tantalum disk of the thickness of the cup and top plate. Finally, a stainless steel disk surrounds the inner objects (tantalum shell, Pu disk, and gap), as shown in Figure 3.

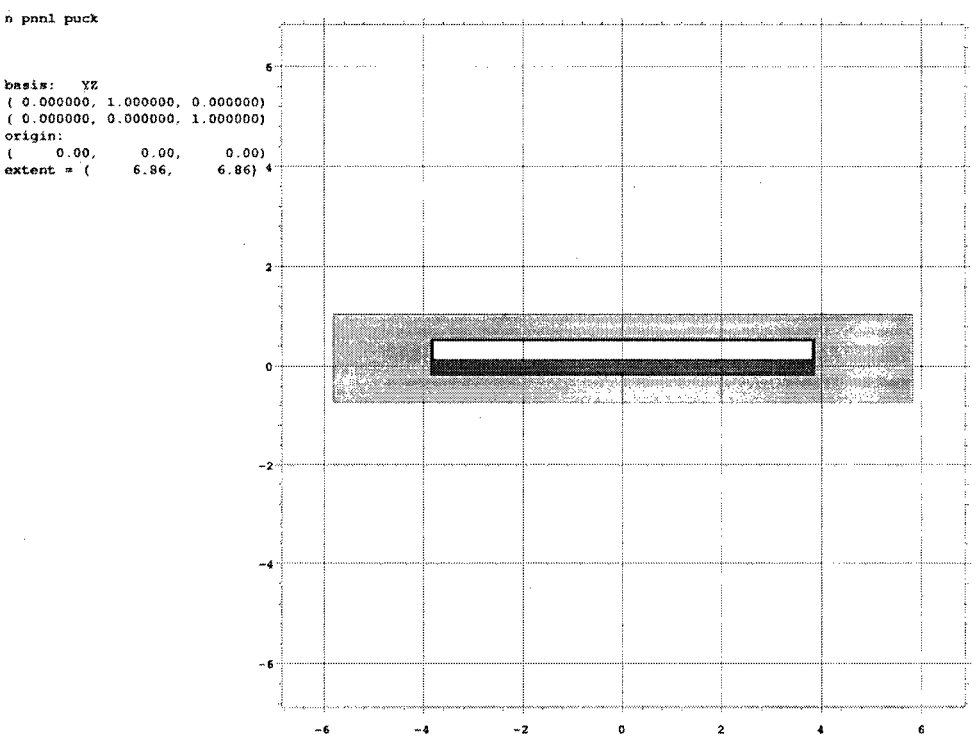

Figure 3. MCNPX model of sealed source. Color indicates material as follows: [redacted], SS316 is green and tantalum is dark blue.

For SNAR use only in accordance with (HSHQDC-08-C-00128). No other use is authorized.

Pu metal can exist in up to six distinct phases. The most common are alpha phase with a density of 19.86 g/cc and delta phase with a density of 15.92 g/cc. The alloy and density information were not supplied and we made calculations for both with the conservative bound using the 19.86 g/cc density.

For illumination of the sample with a 6 MeV neutron beam we find a fission rate of [redacted] with an average neutron multiplicity of [redacted].

For criticality calculations, we calculate k_{eff} and present results in Table 3. As a test of the calculation we repeat the calculation with the same geometry but with the Pu density increased by a factor of ten (i.e. [redacted].) The errors given for k_{eff} are statistical only. The systematic error from the density uncertainty is substantially larger than the statistical error. The nominal samples, as expected, are far from critical and even with a 10X increase in mass are not critical.

Table 3. Criticality Calculation Results.

Sample	Density (g/cc)	k_{eff}
Nominal	[redacted]	0.13312 +- 0.0017
Nominal	[redacted]	0.10903 +- 0.00015
10X	[redacted]	0.84850 +- 0.00064
10X	[redacted]	0.72606 +- 0.00055

4. Additional calculations

Since the source was initially assayed in August, 1999, the composition has changed. Table 4 gives calculated values for the current composition. Comparing these values to those in Table 1, note that there is a significant reduction in total activity due primarily to decay of ^{241}Pu together with buildup of ^{241}Am. The overall isotopic changes are not large enough to change the conclusions of the MCNP calculations given above.

For SNAR use only in accordance with (HSHQDC-08-C-00128). No other use is authorized.

Table 4. Calculated source composition as of March 1, 2009.

Isotope	Weight fraction (%)	Mass (g)	Activity (Ci)
Pu-238	[redacted]	[redacted]	[redacted]
Pu-239	[redacted]	[redacted]	[redacted]
Pu-240	[redacted]	[redacted]	[redacted]
Pu-241	[redacted]	[redacted]	[redacted]
Pu-242	[redacted]	[redacted]	[redacted]
Am-241	[redacted]	[redacted]	[redacted]
Np-237	[redacted]	[redacted]	[redacted]
Others	[redacted]	[redacted]	[redacted]
Total	[redacted]	[redacted]	[redacted]

Finally, we made calculations to address the question of heating of the sample under neutron irradiation. Conservatively, we assumed that the object would be subject to a continuous flux of 6 MeV neutrons with no heat loss to the environment. Under these conditions, for an accelerator beam current of 50 μA, the power generated by irradiating the puck is 0.35 μW, as compared to the 0.10 μW generated via spontaneous fission in the absence of an external neutron beam. Allowing this heat to accumulate only in the Pu kernel (no heat transfer to the case or the surroundings) gives the temperature rise rate and time to melting of the Pu given in Table 5. Melting is highly improbable.

Table 5. Summary of PSS-001 heating under neutron interrogation.

Induced Fission Rate	[redacted]
Induced Power	[redacted]
Spontaneous Fission Rate	[redacted]
Intrinsic Power	[redacted]
Total Power	[redacted]
Total Temperature Rise Rate	3.06×10^{-8} K/s
Total Time to Melt	5.6×10^{6} hr

For SNAR use only in accordance with (HSHQDC-08-C-00128). No other use is authorized.

5. Planned procedures and precautions

Based on the analysis above, the radiological hazards posed by handling the PSS-001 and exposing it to the interrogating neutron beam are minimal. The procedures described here will be followed to ensure that the physical integrity of the sealed source is maintained and that radiation exposures are low. Security procedures are beyond the scope of this document but will be developed in cooperation with the appropriate authorities. We only note here that if the puck is stored at the MIT campus, we expect it to be stored at the Nuclear Reactor Laboratory and that the security of this storage site has been extensively reviewed.

In use at Bates, the material will be brought from storage and placed in the testing configuration within the accelerator exclusion area as shown in Figure 4. During accelerator operation, personnel will be at least 30 feet from the puck and, in most locations where there will be significant stay times, protected by the collimator shielding. Dose rates for the puck will be monitored before and after test runs. For most runs, the object can be left in a protective container. When it is necessary to test the bare object, care will be taken to secure and protect it from mechanical damage.

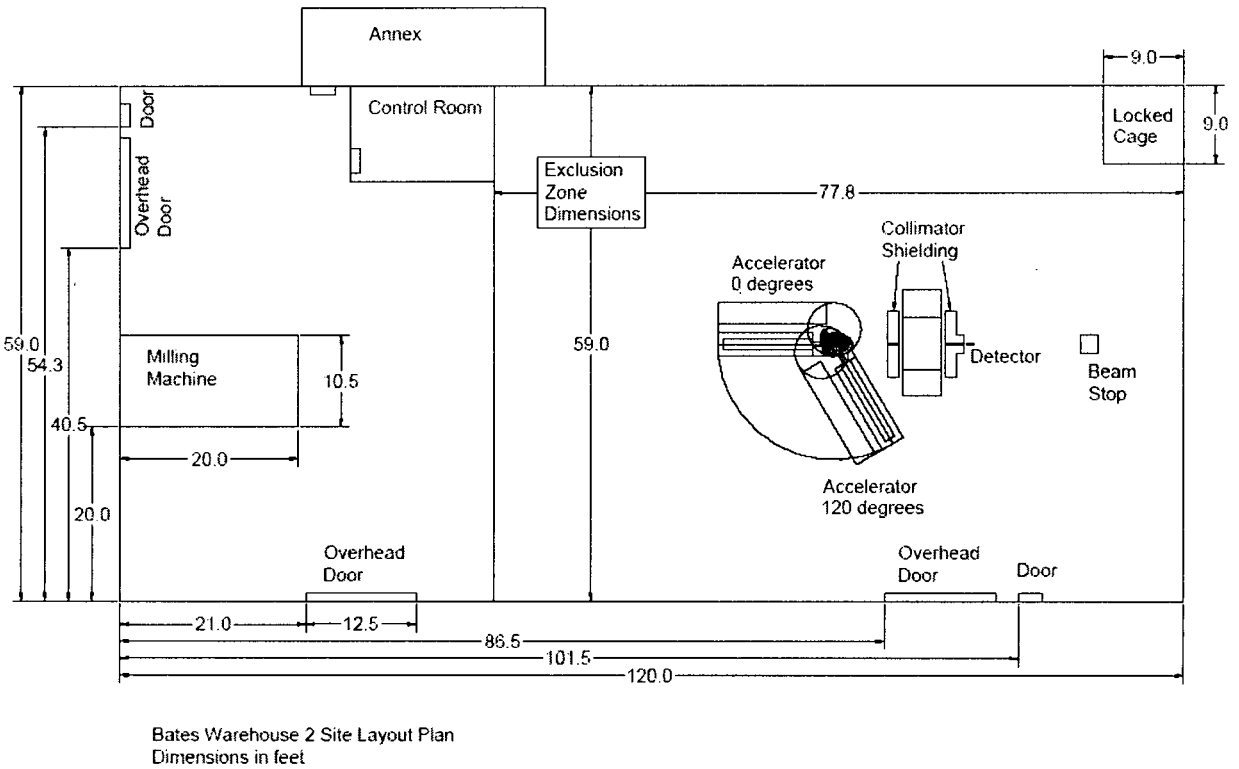

Figure 4. Accelerator facility floor plan showing the exclusion zone dimensions. The object under interrogation is between the two collimator shields.

For SNAR use only in accordance with (HSHQDC-08-C-00128). No other use is authorized.

6. Summary

From the source construction, the source strength, and non-critical nature of the source, we find that is safe to use as a test sample in the SNAR system beam.

For SNAR use only in accordance with (HSHQDC-08-C-00128). No other use is authorized.

SAFETY ANALYSIS REPORT

USE OF DHS/DNDO-SUPPLIED SEALED HEU AND LEU SAMPLES AT THE MIT-BATES LINEAR ACCELERATOR CENTER

Prepared by:

Peter Chapman(MIT-NED)
Karen Dow (MIT-Bates)
Gordon Kohse (MIT-NED)
David Perticone (L-3/MIT-NED)
Christoph Tschalaer (MIT-Bates)
Vitaliy Ziskin (L-3/MIT-NED)

December 2, 2009
Updated for public release: June 11, 2010

For SNAR use only in accordance with (HSHQDC-08-C-00128). No other use is authorized.

Table of Contents

1. Introduction 3
2. Sample Descriptions 3
3. MCNPX Modeling 4
4. Additional Calculations 5
5. Radiation Safety 6
6. Summary 6

For SNAR use only in accordance with (HSHQDC-08-C-00128). No other use is authorized.

1. Introduction

MIT (Bates Linear Accelerator Center, Nuclear Reactor Lab, and Nuclear Science and Engineering Department) and L-3 Communications Security and Detection Systems are collaborating to develop an advanced technology demonstration prototype for Shielded Nuclear Alarm Resolution (SNAR) (pronounced "snare"). This system will be capable of distinguishing special nuclear materials (SNM) from both ordinary fissionable material (such as natural uranium) and non-fissionable materials. The program is funded by the Department of Homeland Security (DHS) Domestic Nuclear Detection Office (DNDO). The goal of the program is to design and build a prototype system that is expected to undergo full testing at MIT and a DNDO-selected site. DNDO has requested a full scale design process which includes experimental measurements and computer simulations. The first three phases (preliminary design, critical design, and system development) will take place at the Bates Laboratory. The L-3/MIT team has previously developed a variable energy neutron source (2-5 MeV) which utilizes a 3 MeV deuteron RFQ accelerator that has been operational at the Bates Lab since 2006. Since the L-3/MIT SNAR system uses a novel neutron interrogation approach to distinguish SNM, it will be vital to perform measurements using the RFQ at Bates Lab. It is crucial to the project to be able to perform measurements with small quantities of SNM during the first three phases of the project. In recognition of this, DNDO has prepared highly enriched uranium (HEU) and low-enriched uranium (LEU) samples proposed for use in the SNAR program. The objective of this document is to demonstrate that these samples can also be used safely at Bates and to request permission to do so.

The safety analysis report is organized as follows. The first part of the document collects the key information on the samples which will be provided by DNDO. The next section describes modeling results using the LANL MCNPX radiation transport simulation code. The next section describes additional calculations based on the modeling results. Finally, the last section describes the radiation safety measures in place where the samples are to be utilized.

2. Sample Descriptions

The HEU sample consists of a [redacted] of uranium, enriched to [redacted]. The sample is a 10 cm by 0.2 cm disk with a 0.3 cm titanium shell. The activity of the bare uranium is [redacted]; however, the overwhelming majority of the activity is due to alpha particle decay. These alpha particles are stopped by the titanium shell, effectively reducing the activity due to spontaneous fission to [redacted].

The LEU sample consists of [redacted] of uranium, enriched to [redacted]. The sample is a square plate, 10 cm on a side, 2.5 cm thick, and with a nickel coating. The thickness of the nickel coating is unknown; it is assumed to be 0.3 cm thick for the purposes of safety calculations. The activity of the bare uranium is [redacted]; however, as in the case of the HEU disk, the overwhelming majority of activity is due to alpha decay which is effectively stopped by the nickel coating. The activity due to spontaneous fission is reduced to [redacted].

3. MCNPX Modeling

Use of Monte Carlo calculations of nuclear processes dates back to the Manhattan project at Los Alamos. The current state of the art code is MCNPX, which seeks to extend the library-based MCNP neutron, photon, and electron modeling to all particles at all energies. It is a branch off the MCNP4 code base. Current plans call for MCNPX and MCNP5 to merge into a single code base sometime after 2010. MCNPX has ~2500 users world-wide and its primary uses are radiation transport (for example dose rate estimation and shielding) and criticality calculations. This study used MCNPX2.7b, which was the current beta version (released June 2009) at the time the calculations were performed, together with the ENDF-VII database. MCNPX models were created based on the supplied sealed sample information.

The samples were exposed to a 6 MeV neutron beam to determine the approximate fission rate expected with use at Bates. Additionally, the fission energy deposition tally was used to calculate the heat produced via induced fission. Finally, the models were used to evaluate the criticality of the sealed source expressed in units of k_{eff}, the generation to generation neutron multiplication. The geometries used in the MCNPX simulation are shown in Figure 1.

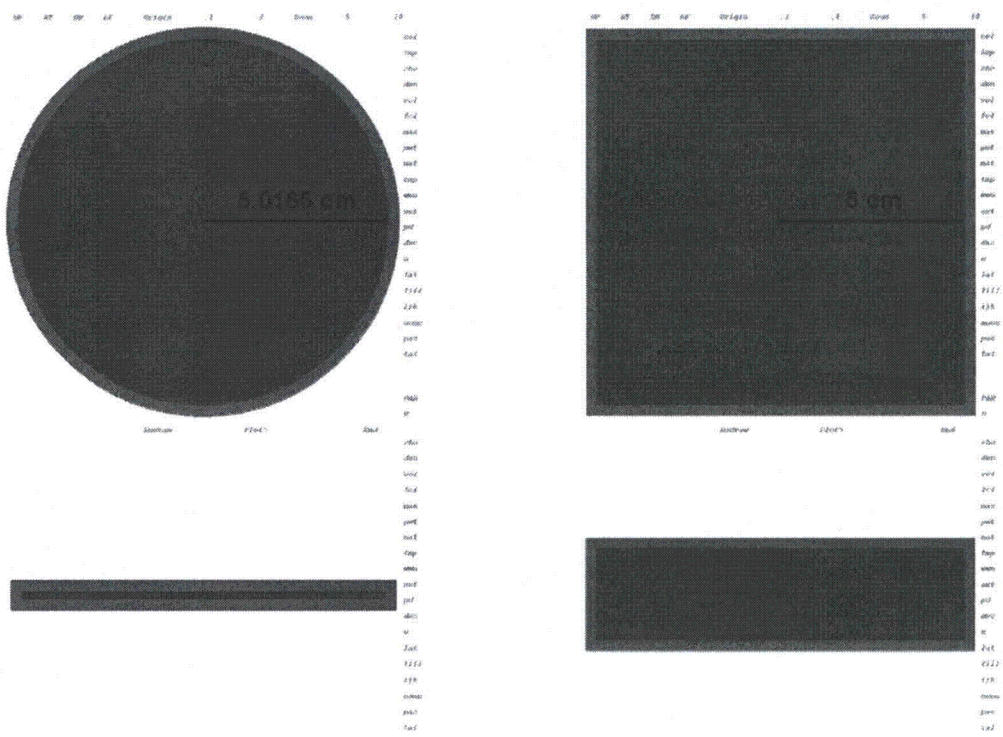

Figure 1. MCNPX models of HEU disk (left) and LEU plate (right) from the top down (top) and side (bottom) perspectives. The blue shaded region represents the uranium portion of the samples, while the red shaded region represents the titanium/nickel covers.

Illuminating the HEU sample with a 6 MeV neutron beam, we find the fission rate to be [redacted] fissions per incoming neutron and an average neutron multiplicity of [redacted] per

fission. Similar illumination of the LEU sample produces a fission rate of [redacted] fissions per incoming neutron and an average neutron multiplicity of [redacted] per fission.

Criticality calculations and the resulting k_{eff} are shown in Table 1 for both the HEU and LEU samples. As a test, the calculations were repeated by fixing the geometry and increasing the density of the uranium isotopes by a factor of five. The errors on k_{eff} are statistical only, and the systematic error from the density uncertainty is substantially larger than the statistical error. Both the nominal and modified density samples show no sign of becoming critical.

Table 1. Criticality calculations for HEU and LEU samples at nominal and modified uranium densities.

Sample	Density [g/cc]	[redacted]
HEU (nominal)	18.9	[redacted]
HEU (dense)	94.5	[redacted]
LEU (nominal)	18.9	[redacted]
LEU (dense)	94.5	[redacted]

4. Additional Calculations

Additional calculations were carried out to determine conditions of use that would cause the samples to melt. The assumptions used in these calculations provide conservative estimates of the melting time and they represent conditions that are impossible to produce during use. The primary assumptions made include the source being subject to a continuous flux of incident 6 MeV neutrons produced by a 50μA current with no heat lost to the environment. Additionally, in order to make the estimate deliberately conservative, calculating the heat produced via fission was done using the MCNPX-determined fission rate and a value of 200 MeV released for each fission.

Under these considerations, the time needed to melt either the HEU or LEU sample is on the order of 10^7 hours of continuous beam. These results are summarized in Table 2.

Table 2. Calculated time to reach melting point with continuous flux.

Parameter	HEU Sample	LEU Sample
Induced Fission Rate [f/s]	[redacted]	[redacted]
Induced Power (fission rate method) [μW]	[redacted]	[redacted]
Induced Power (fission heating tally method) [μW]	[redacted]	[redacted]
Spontaneous Fission Rate [f/s]	[redacted]	[redacted]
Intrinsic Power [μW]	[redacted]	[redacted]
Total Power [μW]	[redacted]	[redacted]
Temperature Rise Rate [K/s]	[redacted]	[redacted]
Time to Melt [hr]	[redacted]	[redacted]

For SNAR use only in accordance with (HSHQDC-08-C-00128). No other use is authorized.

5. Radiation Safety

Personnel protection from radiation hazards is dependent on the exclusion zone around the system. This zone is established by a permanently mounted barrier with an interlocked access gate. Breaking the interlock by opening the gate will automatically shut down the accelerator. In addition to the interlocked gate, the exclusion area boundary has warning zones and flashing warning lights visible on all sides of the exclusion zone that are activated when the accelerator beam is enabled. Emergency shut down switches are provided at appropriate points within the exclusion zone. A search of the exclusion zone is required before operating the accelerator. The search is reinforced by an audible alarm that sounds during the search completion sequence. This alarm must be acknowledged by the operator within the exclusion zone before the accelerator beam is enabled. During experiment setup or service of any equipment in the exclusion zone, the accelerator operating system is locked out with the key in the custody of those performing the exclusion zone work.

6. Summary

From the source construction, the source strength, and the non-critical nature of the source, we find that both sources are safe to use as test samples in the SNAR system beam.

For SNAR use only in accordance with (HSHQDC-08-C-00128). No other use is authorized.