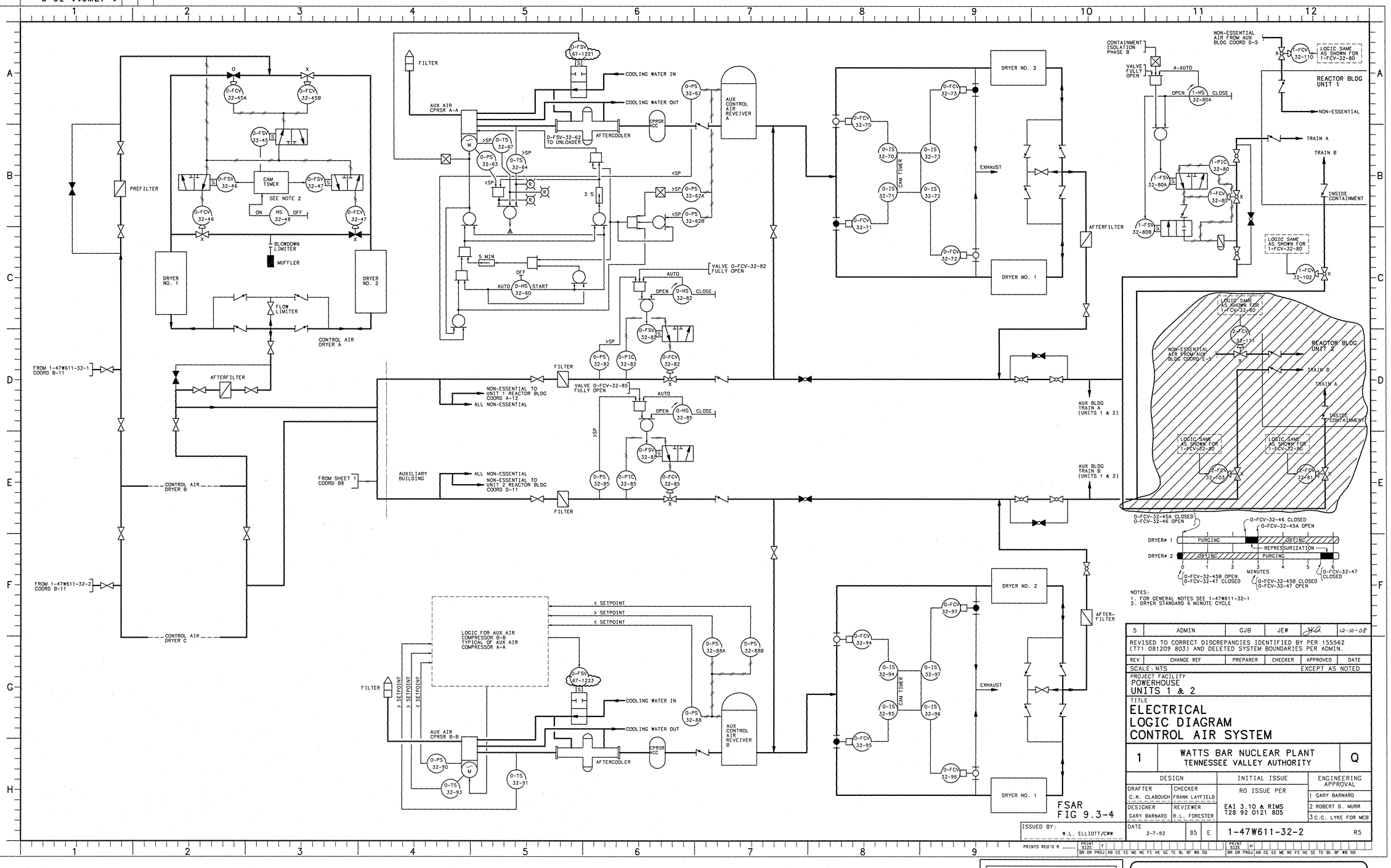

REV	CHANGE REF	PREPARER	CHECKER	APPROVED	DATE
5	ADMIN	GJB	JEW	JKA	12-10-08

REVISED TO CORRECT DISCREPANCIES IDENTIFIED BY PER 155562 (T71 081209 803) AND DELETED SYSTEM BOUNDARIES PER ADMIN.

SCALE: NTS — EXCEPT AS NOTED

PROJECT FACILITY
POWERHOUSE
UNITS 1 & 2

TITLE
ELECTRICAL LOGIC DIAGRAM CONTROL AIR SYSTEM

1 — WATTS BAR NUCLEAR PLANT, TENNESSEE VALLEY AUTHORITY — Q

DESIGN		INITIAL ISSUE	ENGINEERING APPROVAL
DRAFTER C.N. CLABOUGH	CHECKER FRANK LAYFIELD	RO ISSUE PER	1 GARY BARNARD
DESIGNER GARY BARNARD	REVIEWER R.L. FORESTER	EAI 3.10 & RIMS T28 92 0121 805	2 ROBERT D. MURR
			3 C.C. LYKE FOR MCB

ISSUED BY: W.L. ELLIOTT/CWW

DATE 2-7-92 | 85 | E | 1-47W611-32-2 | R5

PRINTS REQ'D R ____ PRINT SIZE F BR OR PROJ AB CE EE ME NE FE HE SE TE BL BF WB SQ — PRINT SIZE H BR OR PROJ AB CE EE ME NE FE HE SE TE BL BF WB SQ

CAD MAINTAINED DRAWING

CONFIGURATION CONTROL DRAWING