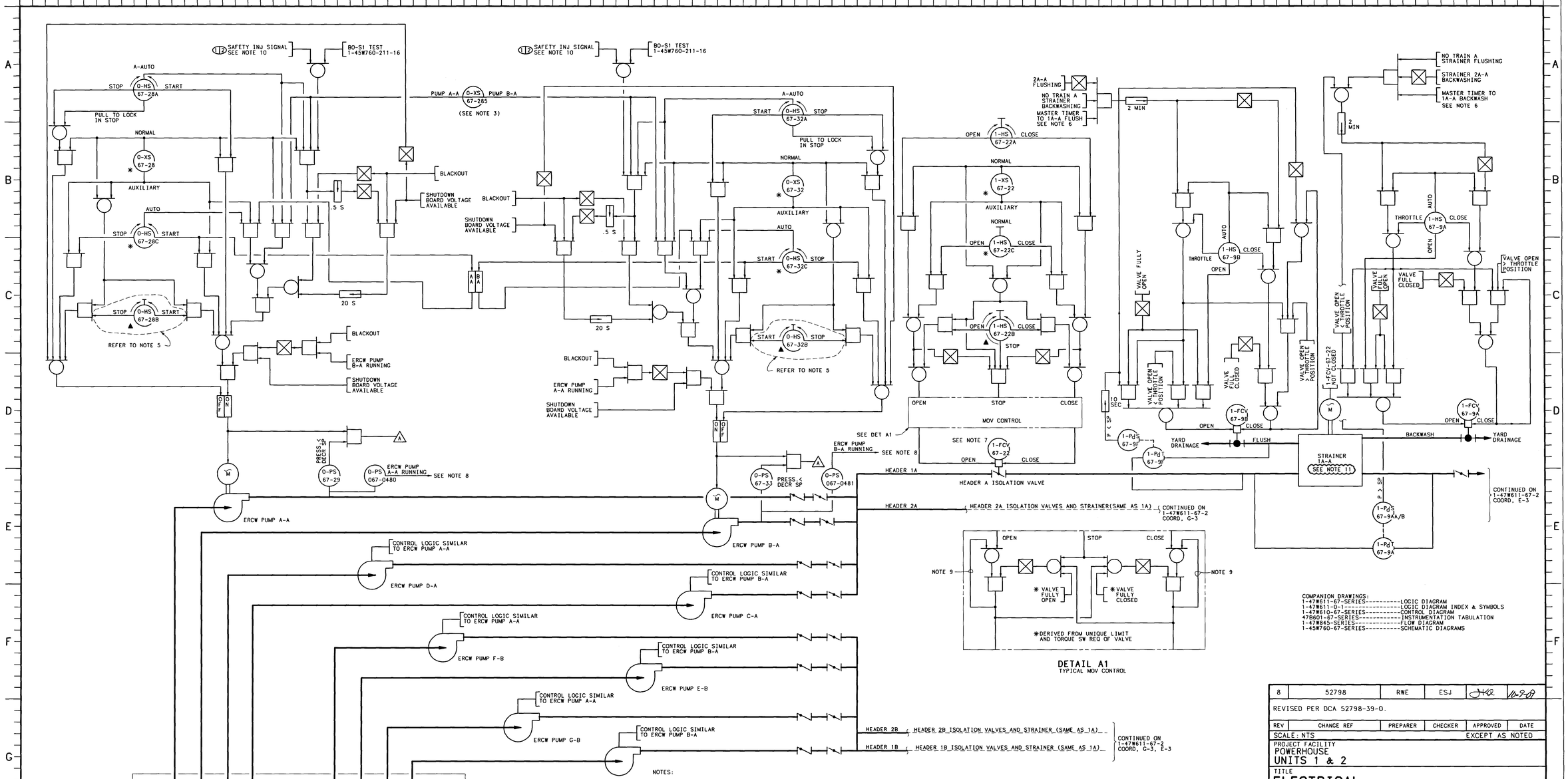

NOTES:

1. FOR SYMBOLS OTHER THAN THOSE NOTED SEE INSTRUMENTATION AND IDENTIFICATION STANDARDS, LATEST ISSUE.
2. FOR COMPLETE INSTRUMENTATION AND COMPONENT SEPARATION DESIGNATIONS SEE CONTROL DIAGRAM, 1-47W610-67-1, 2, 3, 4, 5.
3. PAIRED PUMPS (A-A & B-A), C-A & D-A, E-B & F-B, & G-B & H-B) ARE TIED TO COMMON SHUTDOWN BOARD, PURPOSE OF XS-67-XXX IS TO PREVENT MORE THAN ONE PUMP AT A TIME BEING FED FROM A SINGLE DIESEL GENERATOR.
4. "DIGITAL AND ANALOG LOGIC SYMBOLS ARE USED ON LOGIC DIAGRAMS TO FUNCTIONALLY DESCRIBE THE PROCESS CONTROL. REFER TO THE ASSOCIATED WIRING SCHEMATIC FOR THE ELECTRICAL COMPONENTS USED TO IMPLEMENT THE CONTROL SCHEME."
5. D-HS-67-28B, 32B, 36B & 40B ARE DISCONNECTED TO PREVENT SPURIOUS OPERATION OF PUMPS A-A, B-A, C-A & D-A IN CASE OF FIRE.
6. THE BACKWASH/FLUSH MASTER TIMER ACTIVATES AT 12 HOUR INTERVALS FOR A PERIOD OF BETWEEN 5 AND 20 MINUTES.
7. VALVES 1 AND 2-FCV-67-22 AND 1 AND 2-FCV-67-24 ARE ADMINISTRATIVELY LOCKED IN THE OPEN POSITION. (WITH BREAKER OPEN) (APPENDIX R)
8. INPUT TO MICROBIOLOGICAL INDUCED CORROSION (MIC) REMOVAL SYSTEM SUPPLIED ON CONTRACT 91NNA-75954A, DRAWING #BECS001.
9. SEAL-IN NOT FOR 1-FCV-67-143, 2-FCV-67-143 & 0-FCV-67-144.
10. SAFETY INJECTION SIGNAL FROM UNIT 2 IS DISCONNECTED, SO AS TO AVOID INADVERTENT START OF ERCW PUMPS.
11. DURING CROSS TIE OPERATION, STRAINER WILL BE RUN IN CONTINUOUS BACKWASH.

SYMBOLS:

✱ - LOCATED ON ELECTRICAL SWITCHGEAR
- LOCATED IN AUXILIARY CONTROL ROOM
▲ - TEST SWITCH
(1 2) & [1 2] DENOTE UNIT 1 AND UNIT 2 INTERFACE POINTS.

FSAR FIG 9.2-5

REV	CHANGE REF	PREPARER	CHECKER	APPROVED	DATE
8	52798	RWE	ESJ	JHR	10-3-89

REVISED PER DCA 52798-39-0.

SCALE: NTS — EXCEPT AS NOTED

PROJECT FACILITY
POWERHOUSE
UNITS 1 & 2

TITLE
ELECTRICAL LOGIC DIAGRAM ESSENTIAL RAW COOLING WATER

1 — WATTS BAR NUCLEAR PLANT — TENNESSEE VALLEY AUTHORITY — Q

DESIGN		INITIAL ISSUE	ENGINEERING APPROVAL
DRAFTER J.A. TALLEY	CHECKER FRANK LAYFIELD	RO ISSUE PER EAI-3.10, RIMS T28 '92 0128 807, DCN M-14566-A & DCN S-16643-A	1 GARY BARNARD
DESIGNER GARY BARNARD	REVIEWER R.L. FORESTER		2 ROBERT D. MURR
DATE 2-27-92	85 E	1-47W611-67-1 R8	3 M.C. BRICKEY/RLS

ISSUED BY: R.M. JOHNSON

PRINTS REQ'D R ____ PRINT SIZE F: BR OR PROJ AB CE EE ME NE FE HE SE TE BL BF WB SQ — PRINT SIZE H: BR OR PROJ AB CE EE ME NE FE HE SE TE BL BF WB SQ

CAD MAINTAINED DRAWING

CONFIGURATION CONTROL DRAWING