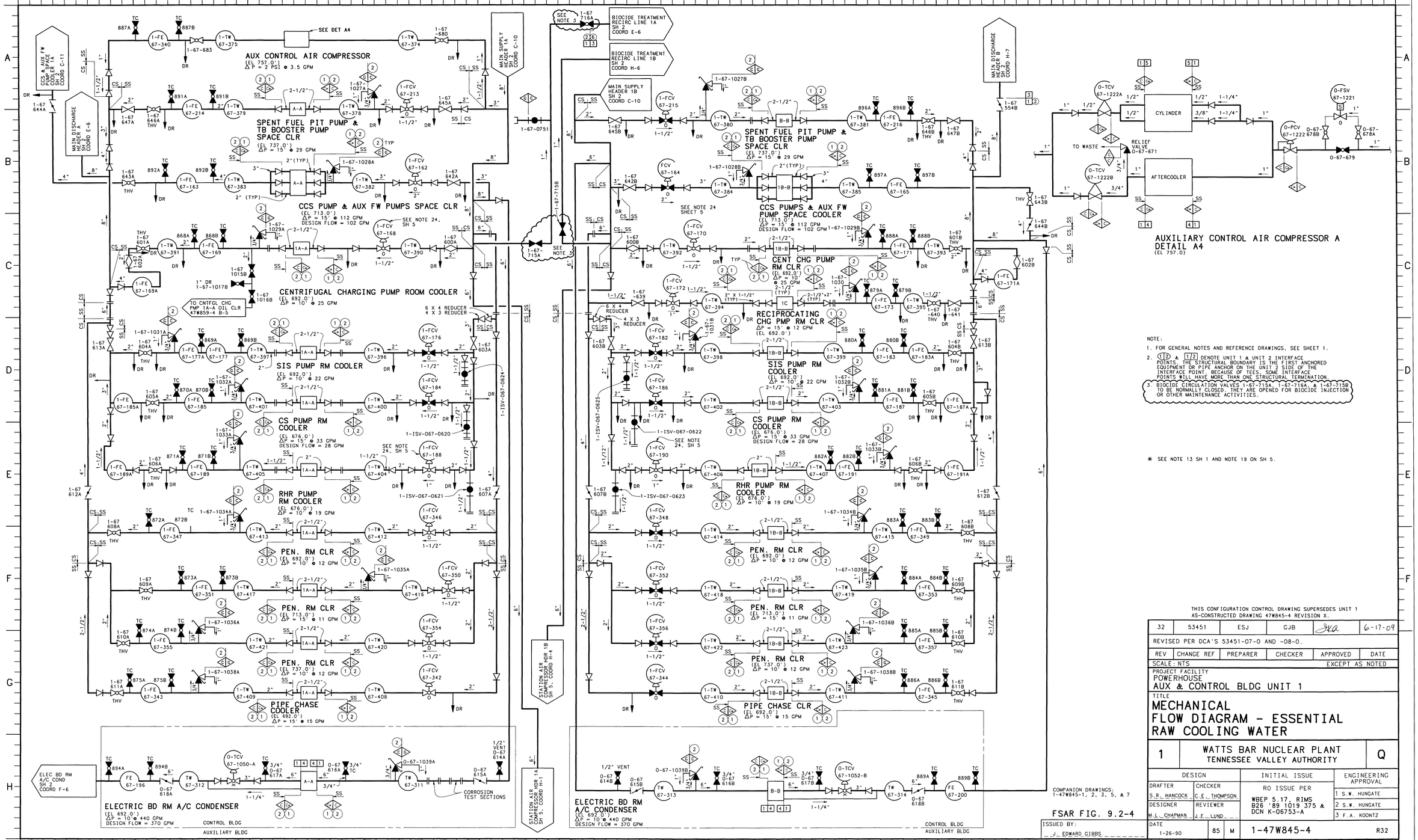

NOTE:

1. FOR GENERAL NOTES AND REFERENCE DRAWINGS, SEE SHEET 1.
2. 1/2 ▲ 1/2 DENOTE UNIT 1 ▲ UNIT 2 INTERFACE POINTS. THE STRUCTURAL BOUNDARY IS THE FIRST ANCHORED EQUIPMENT OR PIPE ANCHOR ON THE UNIT 2 SIDE OF THE INTERFACE POINT. BECAUSE OF TEES, SOME INTERFACE POINTS WILL HAVE MORE THAN ONE STRUCTURAL TERMINATION.
3. BIOCIDE CIRCULATION VALVES 1-67-715A, 1-67-716A, & 1-67-715B TO BE NORMALLY CLOSED. THEY ARE OPENED FOR BIOCIDE INJECTION OR OTHER MAINTENANCE ACTIVITIES.

✱ SEE NOTE 13 SH 1 AND NOTE 19 ON SH 5.

THIS CONFIGURATION CONTROL DRAWING SUPERSEDES UNIT 1 AS-CONSTRUCTED DRAWING 47W845-4 REVISION X.

REV	CHANGE REF	PREPARER	CHECKER	APPROVED	DATE
32	53451	ESJ	GJB	JKA	6-17-09

REVISED PER DCA'S 53451-07-0 AND -08-0.

SCALE: NTS — EXCEPT AS NOTED

PROJECT FACILITY
POWERHOUSE
AUX & CONTROL BLDG UNIT 1

TITLE
MECHANICAL
FLOW DIAGRAM - ESSENTIAL
RAW COOLING WATER

1 — WATTS BAR NUCLEAR PLANT
TENNESSEE VALLEY AUTHORITY — Q

DESIGN		INITIAL ISSUE	ENGINEERING APPROVAL
DRAFTER S.R. HANCOCK	CHECKER C.E. THOMPSON	RO ISSUE PER WBEP S.17, RIMS B26 '89 1019 375 & DCN K-06753-A	1 S.W. HUNGATE
DESIGNER M.L. CHAPMAN	REVIEWER J.E. LUND		2 S.W. HUNGATE
			3 F.A. KOONTZ
DATE 1-26-90	85 M	1-47W845-4	R32

COMPANION DRAWINGS: 1-47W845-1, 2, 3, 5, & 7

FSAR FIG. 9.2-4

ISSUED BY: J. EDWARD GIBBS

PRINTS REQ'D R ____ PRINT SIZE F BR OR PROJ AB CE EE ME NE FE HE SE TE BL BF WB SQ — PRINT SIZE H BR OR PROJ AB CE EE ME NE FE HE SE TE BL BF WB SQ

CAD MAINTAINED DRAWING

CONFIGURATION CONTROL DRAWING