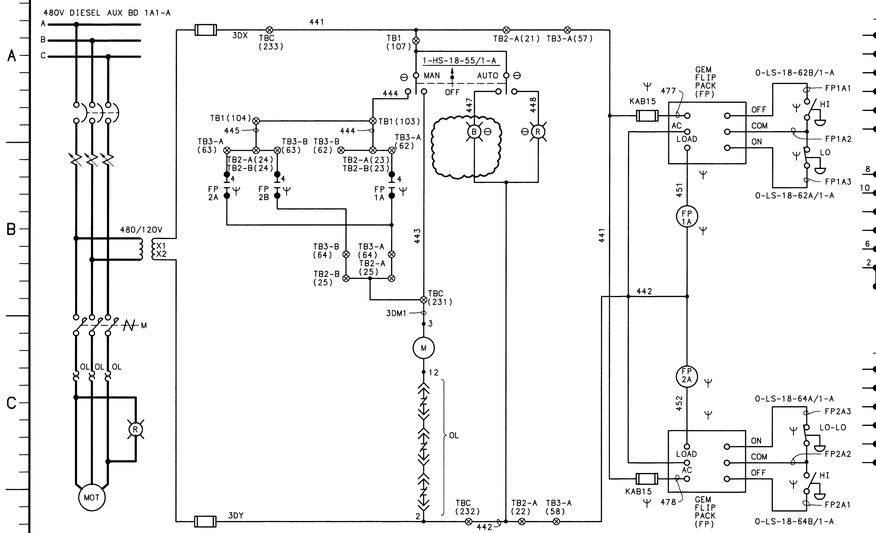

DIESEL GEN 1A-A DAY TANK FUEL OIL TRANSFER PUMP 1-TRAIN A

NOMENCLATURE	PUMP	DSL BOARD	CMPT IDENT NO.	WIRE PREFIX	CONTROL SWITCHES	LEVEL SWITCHES	FUSE NOS. (SEE NOTE 6)	KAB15 FUSE NOS.
DSL GEN 1A-A DAY TANK FUEL OIL TRANSFER PUMP	1	1A1-A	1-MTR-18-55-A	3D	1-HS-18-55/1-A	1-LS-18-62A/1-A,B/1-A;1-LS-18-64A/1-A,B/1-A	A13/31	A13/32
DSL GEN 2A-A DAY TANK FUEL OIL TRANSFER PUMP	1	2A1-A	2-MTR-18-55-A	3D	2-HS-18-55/3-A	2-LS-18-62A/3-A,B/3-A;2-LS-18-64A/3-A,B/3-A	A13/31	A13/32

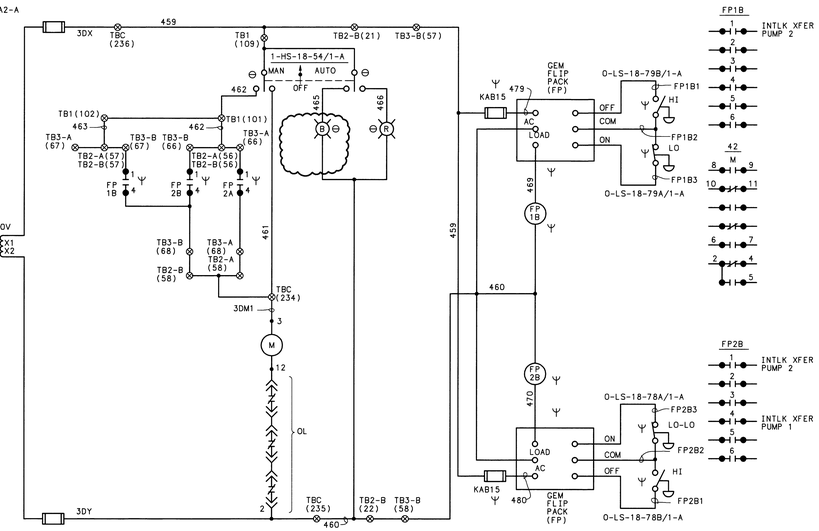

DIESEL GEN 1A-A DAY TANK FUEL OIL TRANSFER PUMP 2-TRAIN A

NOMENCLATURE	PUMP	DSL BOARD	CMPT IDENT NO.	WIRE PREFIX	CONTROL SWITCHES	LEVEL SWITCHES	FUSE NOS. (SEE NOTE 6)	KAB15 FUSE NOS.
DSL GEN 1A-A DAY TANK FUEL OIL TRANSFER PUMP	2	1A2-A	1-MTR-18-54/1-A	3D	1-HS-18-54/1-A	1-LS-18-79A/1-A,B/1-A;1-LS-18-78A/1-A,B/1-A	A23/31	A23/32
DSL GEN 2A-A DAY TANK FUEL OIL TRANSFER PUMP	2	2A2-A	2-MTR-18-54/3-A	3D	2-HS-18-54/3-A	2-LS-18-79A/3-A,B/3-A;2-LS-18-78A/3-A,B/3-A	A23/31	A23/32

NOTES:
1. ALL EQUIPMENT IS LOCATED ON THE BOARD FROM WHICH ITS DESIGNATED LOAD IS POWERED, UNLESS OTHERWISE DESIGNATED.
2. 480V MOTOR CONTROL CENTERS WERE PURCHASED ON TVA CONTRACT 74C5-84646.
3. 480V DIESEL GENERATORS AND TRANSFER PUMPS WERE PURCHASED ON TVA CONTRACT 74C63-83090.
4. ALL SYSTEM ANNUNCIATION WILL APPEAR TOGETHER ON A SEPARATE SHEET WITHIN ITS APPLICABLE SYSTEM SERIES.
5.
6. FUSE NUMBERS SHOWN IN TABLES SHOULD BE COMBINED WITH THE APPLICABLE BOARD PREFIX LISTED BELOW TO FORMULATE COMPLETE UNIQUE FUSE IDENTIFICATION NUMBER:

   480V DSL AUX BDS: 1-FU-215-

   EXAMPLE:

   1-FU-215-A13/31

   1 — THIS NUMBER WILL CHANGE TO 2 FOR UNIT 2 BOARDS
7. THE FUSE INFORMATION FOR CLASS 1E FUSES OR FUSES USED TO PROTECT ELECTRICAL PENETRATIONS SHOWN IN THIS DRAWING SERIES, OR AS GIVEN FOR THESE CIRCUITS IN VENDOR CONTRACT DRAWINGS REFERENCED IN THIS DRAWING SERIES, IS FOR INFORMATION ONLY. REFER TO THE MASTER FUSE REPORT, DRAWING SERIES 45B6000, FOR CONFIGURATION CONTROLLED FUSE INFORMATION. OTHERWISE, FOR THOSE FUSES NOT LISTED IN THE MASTER FUSE REPORT, THESE DRAWINGS WILL REMAIN THE CONTROLLING DOCUMENT.
8. THE TERMINAL NUMBERS SHOWN FOR MCC-INTERNAL COMPONENTS ARE THE MCC-TERMINAL BLOCK/INTERNAL WIRE NUMBERS RATHER THAN THE ACTUAL DEVICE TERMINAL NUMBERS.
9. FOR GENERAL NOTES, INCLUDING TECHNICAL INFORMATION ABOUT CIRCUIT DESIGN, SEE DRAWING 1-45W760-0-1.

REFERENCE DRAWINGS:
45W732-SERIES----480V DIESEL AUX BD SINGLE LINE
45B1761-SERIES---480V DIESEL AUX BD INTERNAL CONN DIAG UNIT 1
45B1761-SERIES---480V DIESEL AUX BD EXTERNAL CONN DIAG UNIT 1
45B2761-SERIES---480V DIESEL AUX BD INTERNAL CONN DIAG UNIT 2
45W2761-SERIES---480V DIESEL AUX BD EXTERNAL CONN DIAG UNIT 2

SYMBOLS: (SEE NOTE 1)

⊖---------EQUIPMENT LOCATED ON LOCAL DIESEL GENERATOR ENGINE CONTROL PANEL

Ψ --------EQUIPMENT LOCATED ON OR NEAR DIESEL GENERATOR ENGINE

⊗ --------TERMINAL BLOCK SUPPLIED BY VENDOR

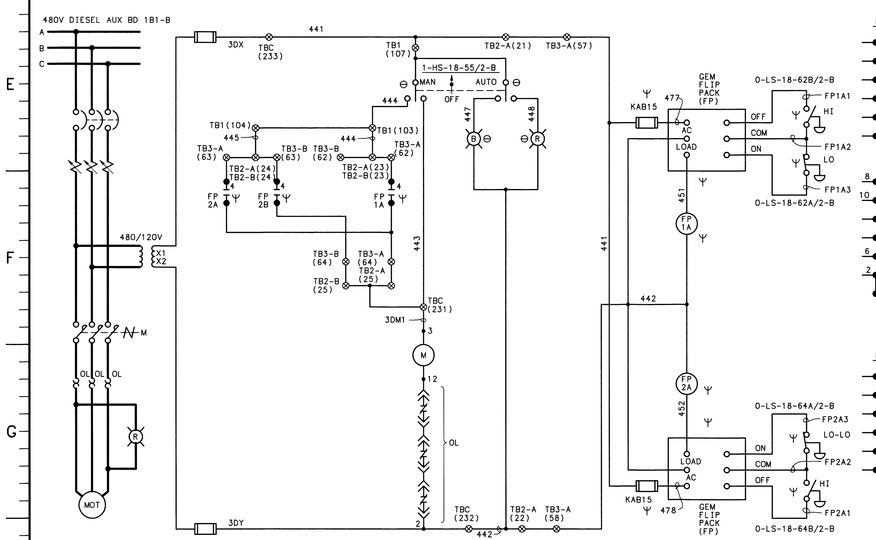

DIESEL GEN 1B-B DAY TANK FUEL OIL TRANSFER PUMP 1-TRAIN B

NOMENCLATURE	PUMP	DSL BOARD	CMPT IDENT NO.	WIRE PREFIX	CONTROL SWITCHES	LEVEL SWITCHES	FUSE NOS. (SEE NOTE 6)	KAB15 FUSE NOS.
DSL GEN 1B-B DAY TANK FUEL OIL TRANSFER PUMP	1	1B1-B	1-MTR-18-55-B	3D	1-HS-18-55/2-B	1-LS-18-62A/2-B,B/2-B;1-LS-18-64A/2-B,B/2-B	B13/31	B13/32
DSL GEN 2B-B DAY TANK FUEL OIL TRANSFER PUMP	1	2B1-B	2-MTR-18-55-B	3D	2-HS-18-55/4-B	2-LS-18-62A/4-B,B/4-B;2-LS-18-64A/4-B,B/4-B	B13/31	B13/32

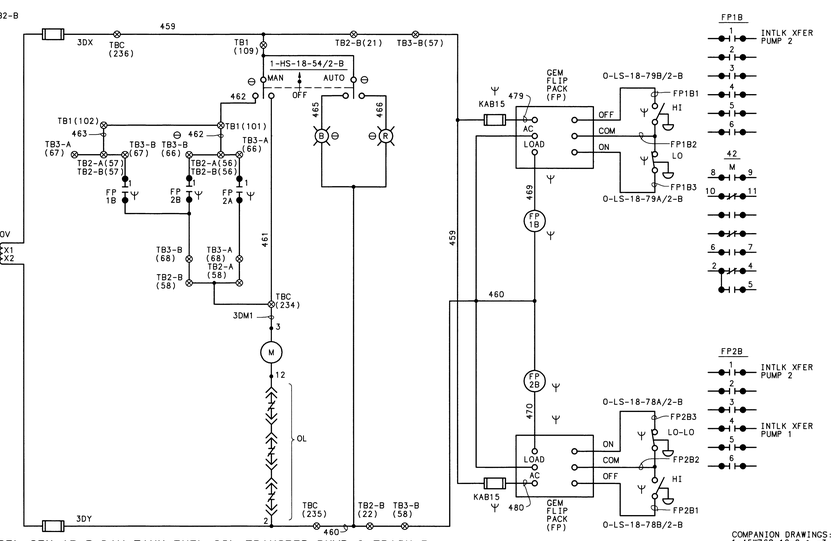

DIESEL GEN 1B-B DAY TANK FUEL OIL TRANSFER PUMP 2-TRAIN B

NOMENCLATURE	PUMP	DSL BOARD	CMPT IDENT NO.	WIRE PREFIX	CONTROL SWITCHES	LEVEL SWITCHES	FUSE NOS. (SEE NOTE 6)	KAB15 FUSE NOS.
DSL GEN 1B-B DAY TANK FUEL OIL TRANSFER PUMP	2	1B2-B	1-MTR-18-54-B	3D	1-HS-18-54/2-B	1-LS-18-79A/2-B,B/2-B;1-LS-18-78A/2-B,B/2-B	B23/31	B23/32
DSL GEN 2B-B DAY TANK FUEL OIL TRANSFER PUMP	2	2B2-B	2-MTR-18-54-B	3D	2-HS-18-54/4-B	2-LS-18-79A/4-B,B/4-B;2-LS-18-78A/4-B,B/4-B	B23/31	B23/32

COMPANION DRAWINGS: 1-45W760-18-2 & -3.

FSAR FIG. 8.3-32

THIS CONFIGURATION CONTROL DRAWING SUPERSEDES UNIT 1 AS-CONSTRUCTED DRAWING 45W760-18-1 REVISION J.

REV	CHANGE REF	PREPARER	CHECKER	APPROVED	DATE
12	50872	GJB	JEW	DLC	8-6-03

REVISED PER DCA 50872-01-0 STAGE 1.

SCALE: NTS — EXCEPT AS NOTED

PROJECT FACILITY: DIESEL BUILDING UNITS 1 & 2

TITLE: WIRING DIAGRAMS FUEL OIL SYSTEM SCHEMATIC DIAGRAM

1 — WATTS BAR NUCLEAR PLANT, TENNESSEE VALLEY AUTHORITY — Q

DESIGN		INITIAL ISSUE	ENGINEERING APPROVAL
DRAFTER J.A.TALLEY	CHECKER D.L.COOPER	RO ISSUE PER WBEP 5.17 & RIMS B26 '90 0725 380	1 D.P.PERRER
DESIGNER M.L.CHAPMAN	REVIEWER D.F.FAULKNER		2 R.T.GRAHAM
			3 C.C.LYKE FOR MCB

ISSUED BY: R.M.JOHNSON FOR WLE

PRINTS REQ'D R

DATE 9-17-90 | 85 | E | 1-45W760-18-1 | R12

PRINT SIZE F — BR OR PROJ AB CE EE ME NE FE HE SE TE BL BF WB SQ

PRINT SIZE H — BR OR PROJ AB CE EE ME NE FE HE SE TE BL BF WB SQ

CAD MAINTAINED DRAWING

CONFIGURATION CONTROL DRAWING