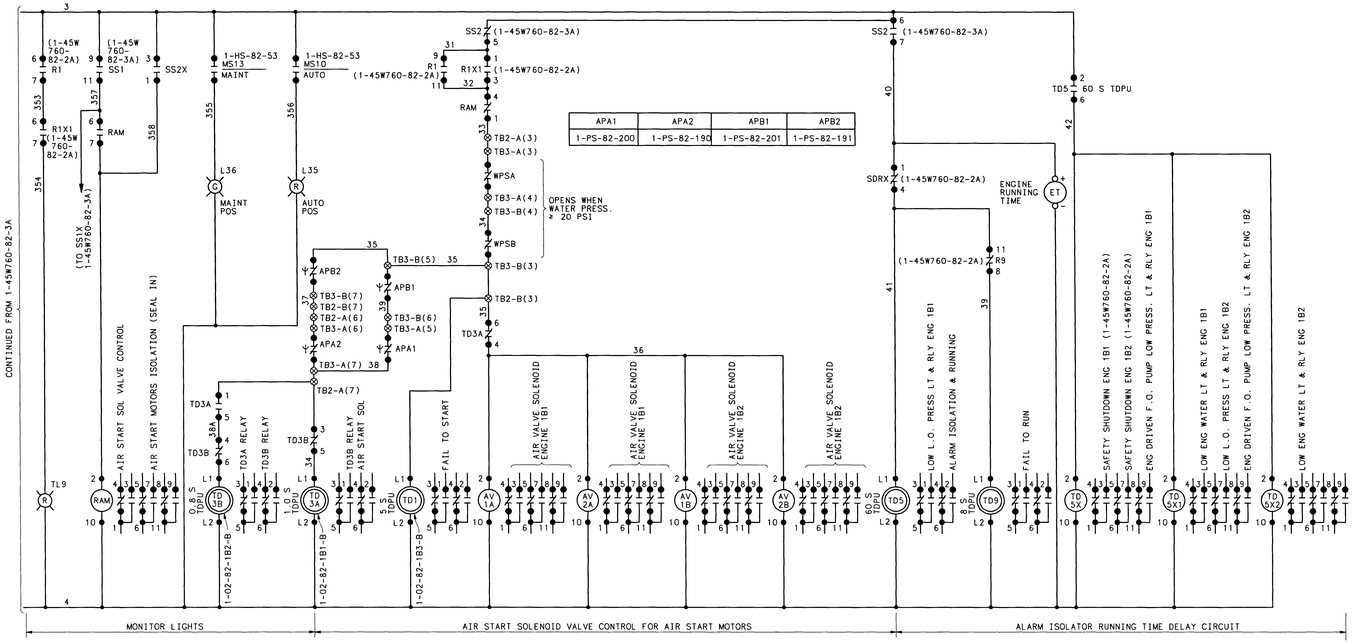

APA1	APA2	APB1	APB2
1-PS-82-200	1-PS-82-190	1-PS-82-201	1-PS-82-191

DIESEL GENERATOR ENGINE CONTROL (CONTINUED)

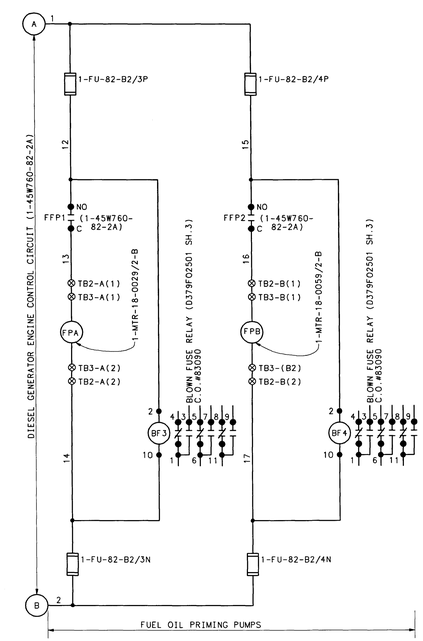

NOTES:

1. FOR ADDITIONAL INFORMATION SEE MANUFACTURERS DRAWINGS---TVA CONTRACT NO. 74C63-83090.
2. DIESEL GENERATORS 1A-A & 2A-A AND ASSOCIATED EQUIPMENT ARE TRAIN A; DIESEL GENERATORS 1B-B & 2B-B AND ASSOCIATED EQUIPMENT ARE TRAIN B. ALL EQUIPMENT IS SAFETY RELATED.
3. ALL EQUIPMENT IS LOCATED ON THE DIESEL GENERATOR ENGINE CONTROL PANEL UNLESS OTHERWISE NOTED.
4. RELAYS K1 & LR IN THE D-G EXCITATION SYSTEM CIRCUIT ARE LATCHING RELAYS SHOWN IN THE SHUTDOWN STATE.
5. ALL ANNUNCIATION APPEARS ON DRAWINGS 1-45W760-82-7A & 8A.
6.
7. DRAWING AS SHOWN IS FOR DIESEL GENERATOR UNIT 1B-B. SEE THE FOLLOWING FOR THE OTHER UNITS:

DIESEL GENERATOR	DRAWING
1A-A	1-45W760-82-4
2A-A	1-45W760-82-4B
2B-B	1-45W760-82-4C
OC-S	1-45W760-82-14

8. SOME CIDS ON THIS DRAWING HAVE BEEN CHANGED AND MAY DIFFER FROM THE CIDS SHOWN ON OTHER DOCUMENTS FOR THE SAME COMPONENT. THE ALTERNATE ID SCREEN (AIX) IN EMS CAN BE ACCESSED AS NECESSARY TO DETERMINE IF PREVIOUS CIDS EXISTED FOR A SPECIFIC COMPONENT.

REFERENCE DRAWINGS:
SINGLE LINES:
6900V DIESEL GENERATOR SINGLE LINES ------ 45W727

CONNECTION DIAGRAMS:
DSL GEN MISC CONN ------ 45W1781-SERIES

SYMBOLS:
(SEE NOTE 3)
Ψ --- DIESEL GENERATOR ENGINES
∇ --- DIESEL GENERATOR PROTECTIVE RELAY PANEL
λ --- DIESEL GENERATOR BATTERY DISTRIBUTION PANEL

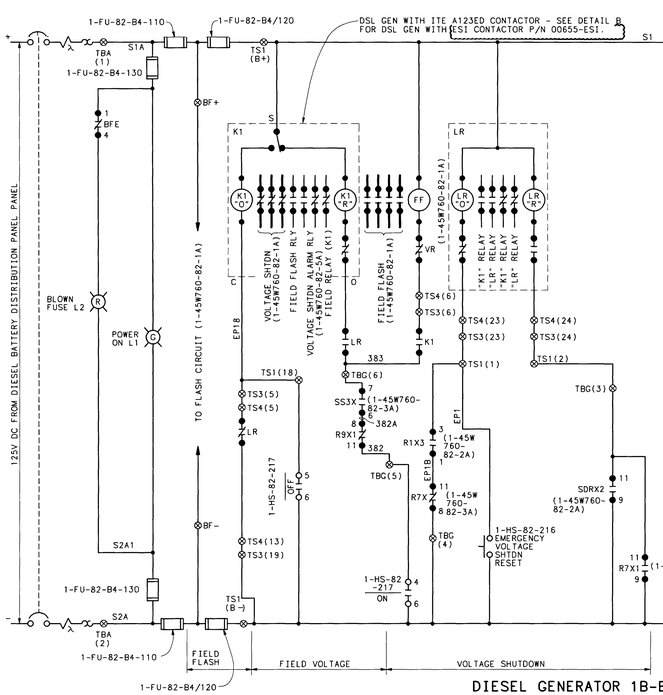

DIESEL GENERATOR 1B-B EXCITATION SYSTEM

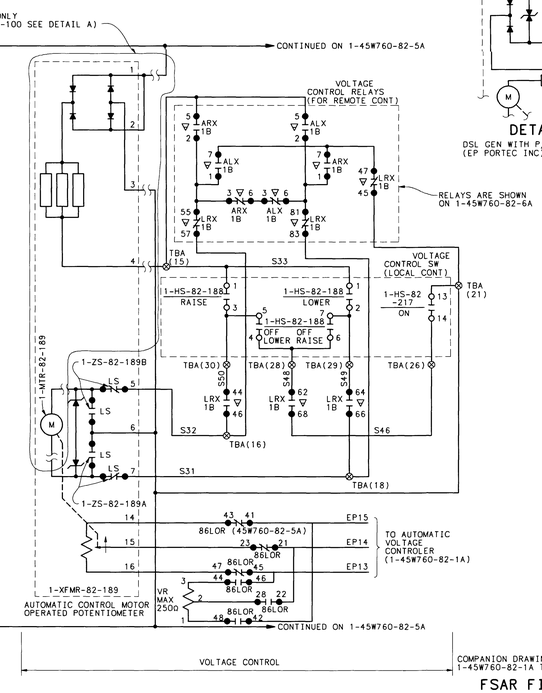

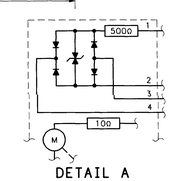

DETAIL A
DSL GEN WITH P/N 72-07900-100 (EP PORTEC INC) ONLY

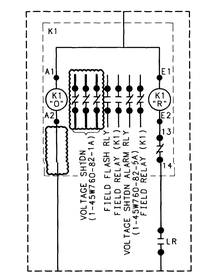

DETAIL B
ESI P/N 00655-ESI

COMPANION DRAWINGS:
1-45W760-82-1A THRU 3A, 5A THRU 22A

FSAR FIG 8.3-27C

6	54553	ESJ	GJB		12-3-09
REVISED PER DCA'S 54553-07-0, -08-0 AND -09-0.					
REV	CHANGE REF	PREPARER	CHECKER	APPROVED	DATE

SCALE: NTS — EXCEPT AS NOTED

PROJECT FACILITY
DIESEL GENERATOR BUILDING
UNIT 1

TITLE
WIRING DIAGRAM STBY DIESEL GEN SYS SCHEM DIAG DG 1B-B

1 — WATTS BAR NUCLEAR PLANT, TENNESSEE VALLEY AUTHORITY — Q

DESIGN		INITIAL ISSUE	ENGINEERING APPROVAL
DRAFTER B. SAMUEL	CHECKER C.G. SAVAGE	RO ISSUE PER DCN S-30422-A, DCA S30422-39-0, DCN M-16145-A, DCA M16145-25-0, DCN M-02671-A, DCA M02671-53-0	1 NR; 2 NR; 3 C.C. LYKE FOR MCB
DESIGNER M.L. CHAPMAN/DLO	REVIEWER NR		

ISSUED BY: W.L. ELLIOTT/D.E. ROOT

DATE 4-26-94 | 85 | E | 1-45W760-82-4A | R6

PRINTS REQ'D R ____ PRINT SIZE F BR OR PROJ AB CE EE ME NE FE HE SE TE BL BF WB SQ — PRINT SIZE H BR OR PROJ AB CE EE ME NE FE HE SE TE BL BF WB SQ

CAD MAINTAINED DRAWING

CONFIGURATION CONTROL DRAWING