APA1	APA2	APB1	APB2
1-PS-82-170	1-PS-82-160	1-PS-82-171	1-PS-82-161

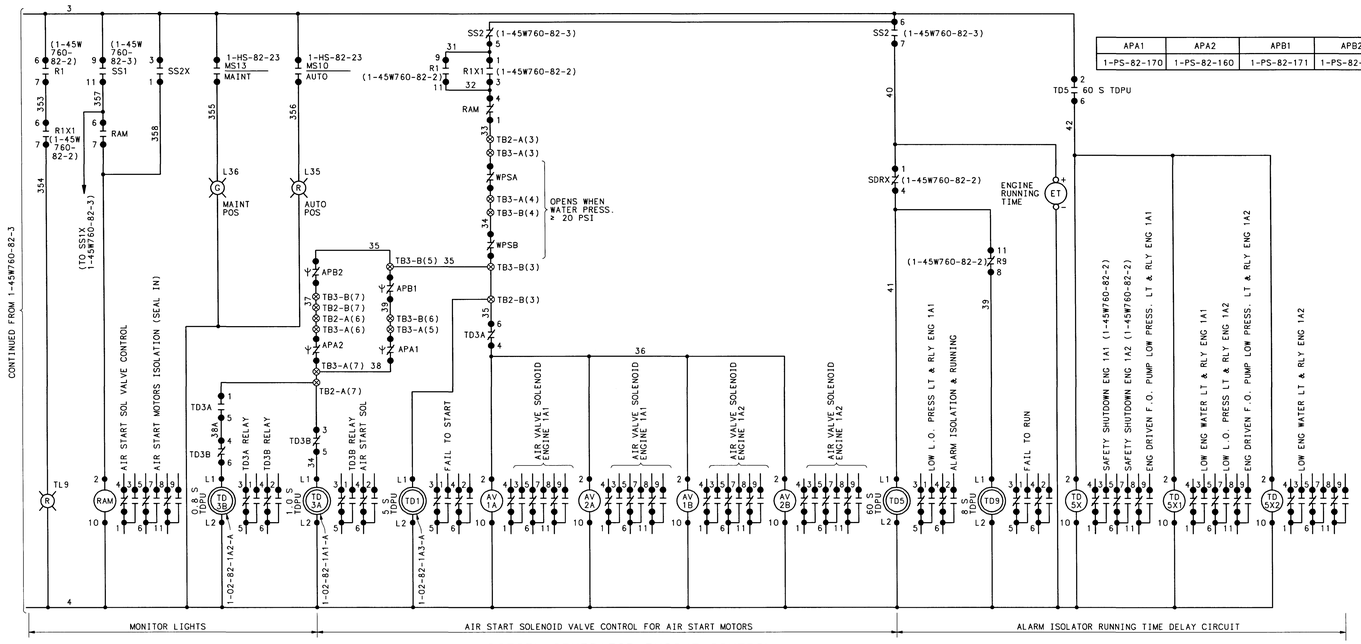

DIESEL GENERATOR ENGINE CONTROL (CONTINUED)

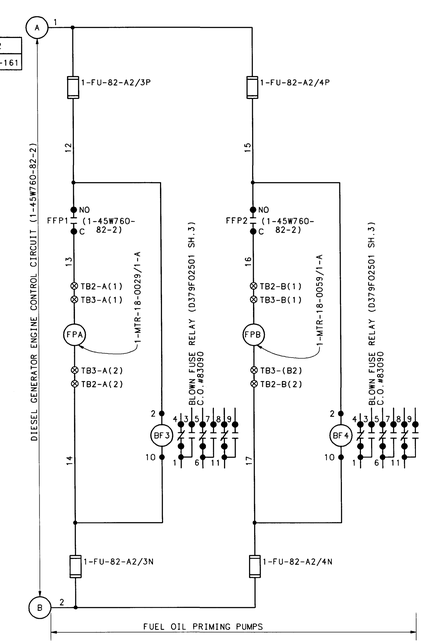

NOTES:

1. FOR ADDITIONAL INFORMATION SEE MANUFACTURERS DRAWINGS---TVA CONTRACT NO. 74C63-83090.
2. DIESEL GENERATORS 1A-A & 2A-A AND ASSOCIATED EQUIPMENT ARE TRAIN A; DIESEL GENERATORS 1B-B & 2B-B AND ASSOCIATED EQUIPMENT ARE TRAIN B. ALL EQUIPMENT IS SAFETY RELATED.
3. ALL EQUIPMENT IS LOCATED ON THE DIESEL GENERATOR ENGINE CONTROL PANEL UNLESS OTHERWISE NOTED.
4. NOTE DELETED
5. RELAYS K1 & LR IN THE D-G EXCITATION SYSTEM CIRCUIT ARE LATCHING RELAYS SHOWN IN THE SHUTDOWN STATE.
6. ALL ANNUNCIATION APPEARS ON DRAWINGS 1-45W760-82-7 & 8.
7. NOTE DELETED
8.
9. DRAWING AS SHOWN IS FOR DIESEL GENERATOR UNIT 1A-A. SEE THE FOLLOWING FOR THE OTHER UNITS:

DIESEL GENERATOR	DRAWING
1B-B	1-45W760-82-4A
2A-A	1-45W760-82-4B
2B-B	1-45W760-82-4C
OC-S	1-45W760-82-14

10. SOME CIDs ON THIS DRAWING HAVE BEEN CHANGED AND MAY DIFFER FROM THE CIDs SHOWN ON OTHER DOCUMENTS FOR THE SAME COMPONENT. THE ALTERNATE ID SCREEN (AII) IN EMS CAN BE ACCESSED AS NECESSARY TO DETERMINE IF PREVIOUS CIDs EXISTED FOR A SPECIFIC COMPONENT.

REFERENCE DRAWINGS:
SINGLE LINES:
6900V DIESEL GENERATOR SINGLE LINES ------ 45W727

CONNECTION DIAGRAMS:
DSL GEN MISC CONN ------ 45W1780-SERIES

SYMBOLS:
(SEE NOTE 3)
--- DIESEL GENERATOR ENGINES
--- DIESEL GENERATOR PROTECTIVE RELAY PANEL
--- DIESEL GENERATOR BATTERY DISTRIBUTION PANEL

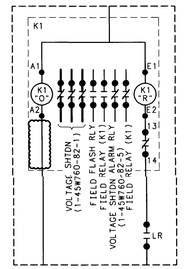

DETAIL B

ESI P/N 00655-ESI

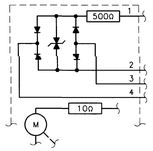

DETAIL A

DSL GEN WITH P/N 72-07900-100 (EP PORTEC INC) ONLY

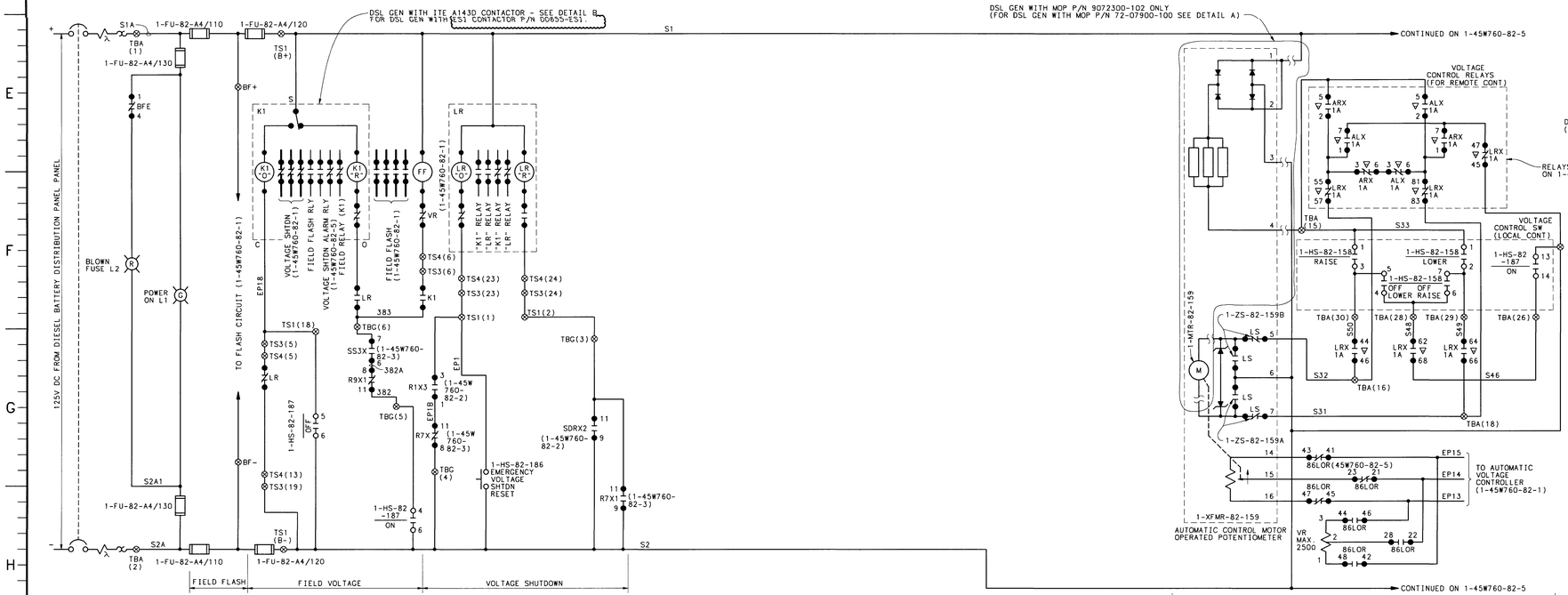

DIESEL GENERATOR 1A-A EXCITATION SYSTEM

COMPANION DRAWINGS:
1-45W760-82-1 THRU 3, 5 THRU 22

FSAR FIG 8.3-27B

THIS CONFIGURATION CONTROL DRAWING SUPERSEDES UNIT 1 AS-CONSTRUCTED DRAWING 45W760-82-4 REVISION R.

REV	CHANGE REF	PREPARER	CHECKER	APPROVED	DATE
20	54553	ESJ	GJB		12-3-09

REVISED PER DCA'S 54553-01-0, -02-0 AND -03-0.

SCALE: NTS — EXCEPT AS NOTED

PROJECT FACILITY
DIESEL GENERATOR BUILDING
UNIT 1

TITLE
WIRING DIAGRAM
STANDBY DIESEL GENERATOR SYS
SCHEMATIC DIAGRAMS DG 1A-A

1 — WATTS BAR NUCLEAR PLANT, TENNESSEE VALLEY AUTHORITY — Q

DESIGN		INITIAL ISSUE	ENGINEERING APPROVAL
DRAFTER D.L.WANG	CHECKER D.L.COOPER	RO ISSUE PER WBEP 5.17 & RIMS B26 '90 0727 377	1 VICTOR PACHECO
DESIGNER M.L.CHAPMAN	REVIEWER D.F.FAULKNER		2 R.T.GRAHAM
			3 C.C.LYKE FOR MCB

ISSUED BY: J.EDWARD GIBBS

DATE 9-22-90 | 85 | E | 1-45W760-82-4 | R20

PRINTS REQ'D R — PRINT SIZE F — BR OR PROJ AB CE EE ME NE FE HE SE TE BL BF WB SQ — PRINT SIZE H — BR OR PROJ AB CE EE ME NE FE HE SE TE BL BF WB SQ

CAD MAINTAINED DRAWING

CONFIGURATION CONTROL DRAWING