NOTES:
1. FOR ADDITIONAL INFORMATION SEE MANUFACTURERS DRAWINGS--TVA CONTRACT NO. 74C63-83090.
2. DIESEL GENERATORS 1A-A & 2A-A AND ASSOCIATED EQUIPMENT ARE TRAIN A; DIESEL GENERATORS 1B-B & 2B-B AND ASSOCIATED EQUIPMENT ARE TRAIN B. ALL EQUIPMENT IS SAFETY RELATED.
3. ALL EQUIPMENT IS LOCATED ON THE DIESEL GEN. ENGINE CONTROL PANEL UNLESS OTHERWISE NOTED.
4. ALL ANNUNCIATION APPEARS ON DRAWINGS 1-45W760-82-7B & 8B.
5.
6. DRAWING AS SHOWN IS FOR DIESEL GENERATOR UNIT 2A-A. SEE THE FOLLOWING FOR THE OTHER UNITS:

DIESEL GENERATOR	DRAWING
1A-A	1-45W760-82-2
1B-B	1-45W760-82-2A
2B-B	1-45W760-82-2C
OC-S	1-45W760-82-2D

7. SOME CIDS ON THIS DRAWING HAVE BEEN CHANGED AND MAY DIFFER FROM THE CIDS SHOWN ON OTHER DOCUMENTS FOR THE SAME COMPONENT. THE ALTERNATE ID SCREEN (AII) IN EMS CAN BE ACCESSED AS NECESSARY TO DETERMINE IF PREVIOUS CIDS EXISTED FOR A SPECIFIC COMPONENT.

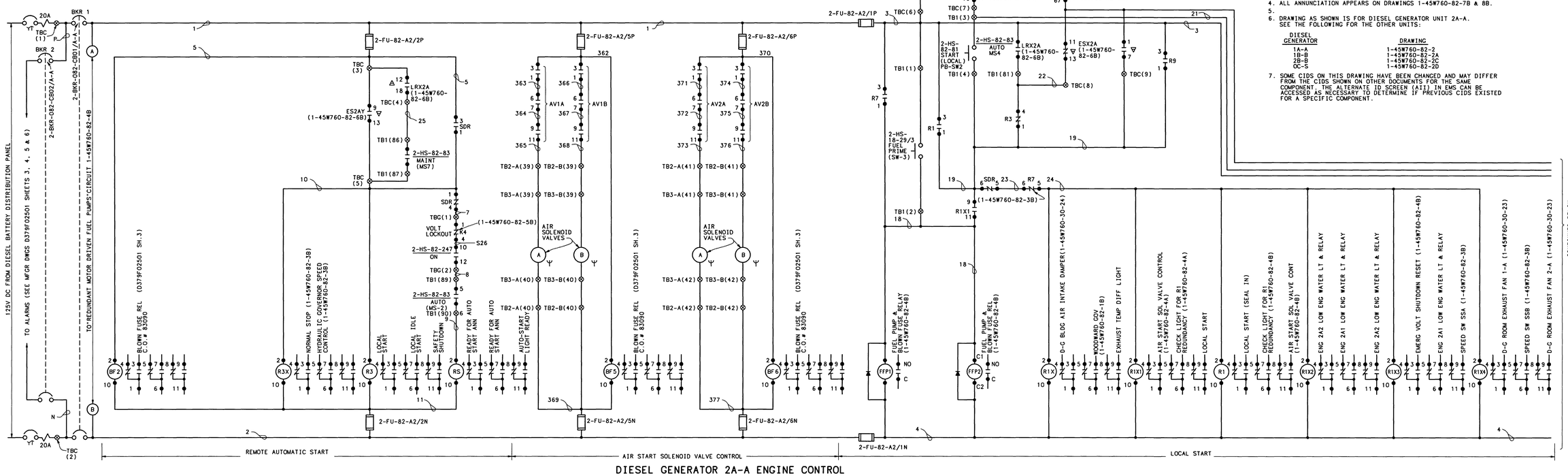

DIESEL GENERATOR 2A-A ENGINE CONTROL

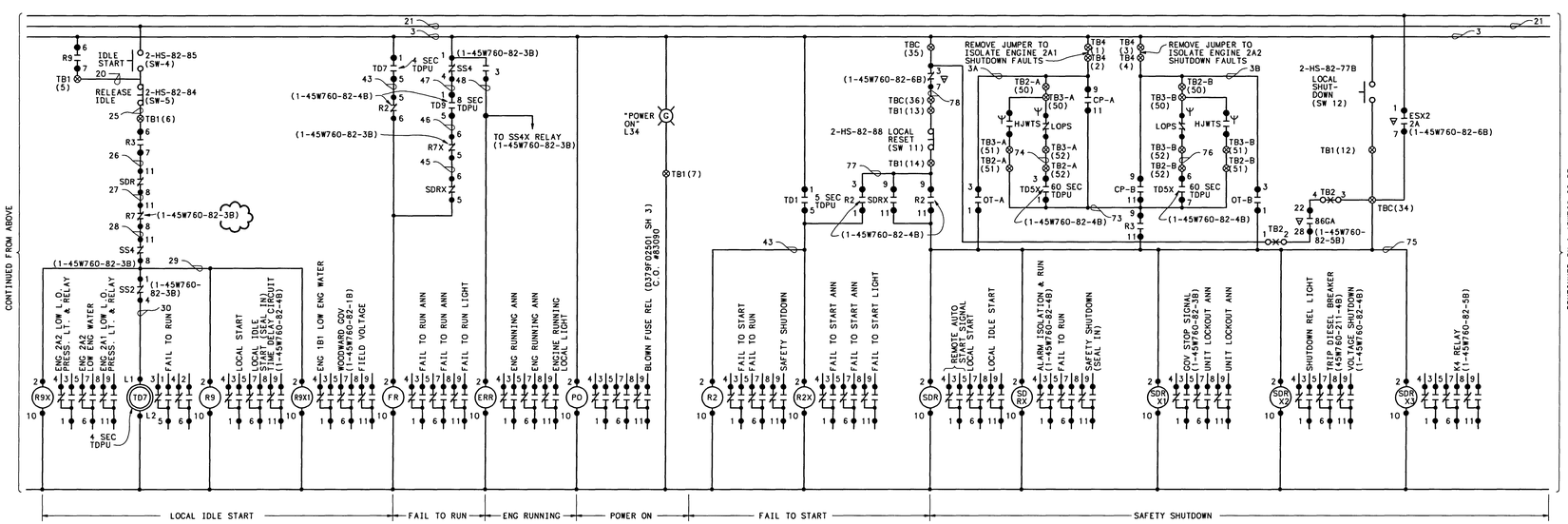

REFERENCE DRAWINGS:
SINGLE LINE:
45W727-----6900V DIESEL GEN. SINGLE LINE
CONNECTION DIAGRAMS
45W2780-SERIES

SYMBOLS: (SEE NOTE 3)
----DIESEL GEN. ENGINES
----DIESEL GEN. PROTECTIVE RELAY PNL.
----DIESEL GEN. BATTERY DISTRIBUTION PNL.

COMPANION DRAWINGS:
1-45W760-82-1, 3 THRU 22

FSAR FIG 8.3.25D

ISSUED BY:
W.L. ELLIOTT/D.E. ROOT

REV	CHANGE REF	PREPARER	CHECKER	APPROVED	DATE
8	ADMIN	ESJ	GJB	JKA	6-8-05

REVISED TO CORRECT DRAWING DISCREPANCY IDENTIFIED BY PER 83007 (T71050608800).

SCALE: NTS — EXCEPT AS NOTED

PROJECT FACILITY
DIESEL GENERATOR BUILDING
UNIT 1

TITLE
WIRING DIAGRAM STBY DIESEL GEN SYS SCHEM DIAG DG 2A-A

1 — WATTS BAR NUCLEAR PLANT
TENNESSEE VALLEY AUTHORITY — N

DESIGN		INITIAL ISSUE	ENGINEERING APPROVAL
DRAFTER M. FEGLEY	CHECKER P. DANIELS	RO ISSUE PER DCN S-30422-A DCA S30422-32-0	1 NR
DESIGNER M.L. CHAPMAN/DLO	REVIEWER NR		2 NR
			3 C.C. LYKE FOR MCB

DATE 4-21-94 | 85 | E | 1-45W760-82-2B | R8

PRINTS REQ'D R ____ PRINT SIZE F BR OR PROJ AB CE EE ME NE FE HE SE TE BL BF WB SQ — PRINT SIZE H BR OR PROJ AB CE EE ME NE FE HE SE TE BL BF WB SQ

CAD MAINTAINED DRAWING

CONFIGURATION CONTROL DRAWING