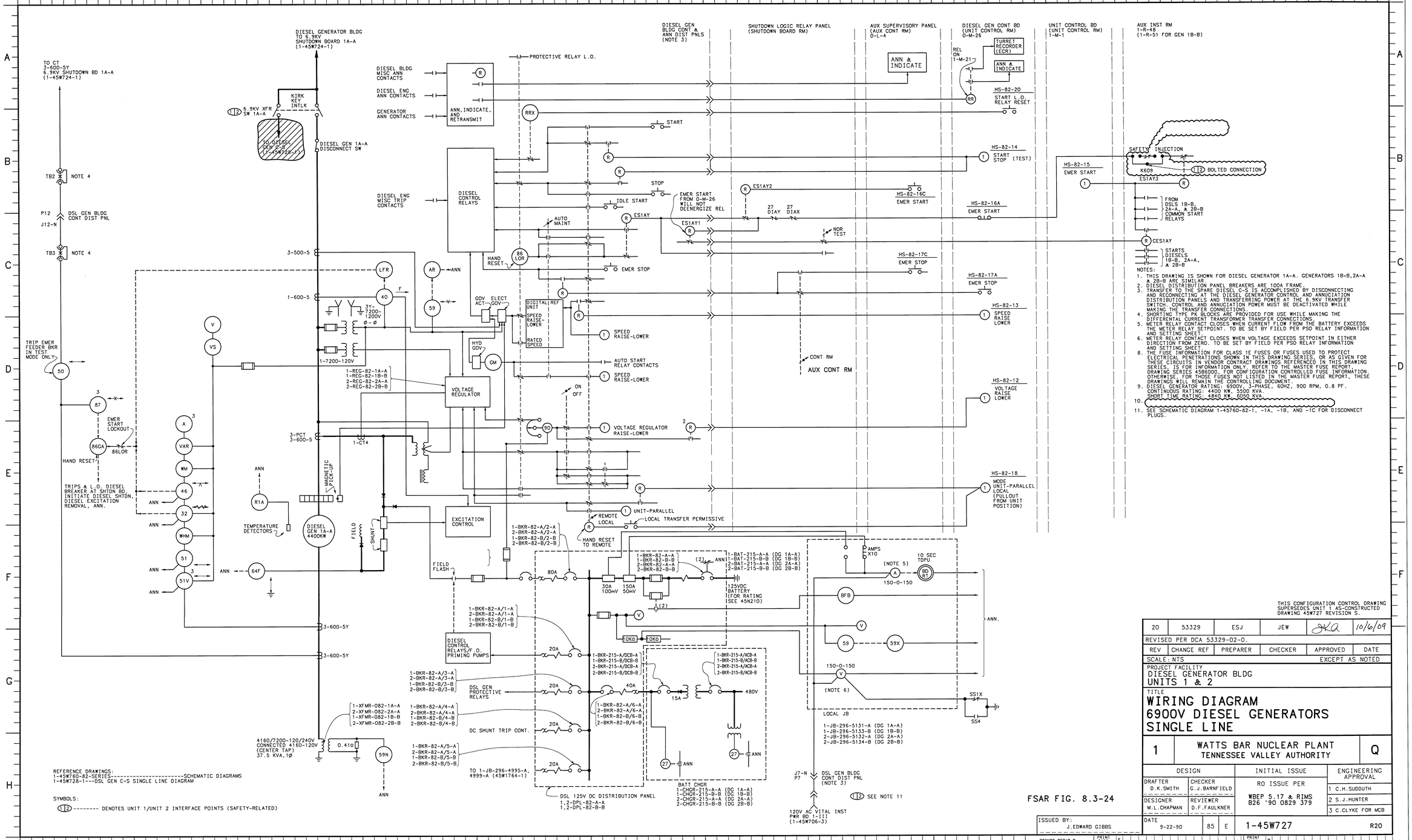

THIS CONFIGURATION CONTROL DRAWING SUPERSEDES UNIT 1 AS-CONSTRUCTED DRAWING 45W727 REVISION S.

REV	CHANGE REF	PREPARER	CHECKER	APPROVED	DATE
20	53329	ESJ	JEW	JKG	10/6/09

REVISED PER DCA 53329-02-O.

SCALE: NTS — EXCEPT AS NOTED

PROJECT FACILITY
DIESEL GENERATOR BLDG
UNITS 1 & 2

TITLE
WIRING DIAGRAM 6900V DIESEL GENERATORS SINGLE LINE

1 — WATTS BAR NUCLEAR PLANT, TENNESSEE VALLEY AUTHORITY — Q

DESIGN		INITIAL ISSUE	ENGINEERING APPROVAL
DRAFTER D.K.SMITH	CHECKER G.J.BARNFIELD	RO ISSUE PER WBEP 5.17 & RIMS B26 '90 0829 379	1 C.H.SUDDUTH
DESIGNER M.L.CHAPMAN	REVIEWER D.F.FAULKNER		2 S.J.HUNTER
			3 C.CLYKE FOR MCB

FSAR FIG. 8.3-24

ISSUED BY: J.EDWARD GIBBS — DATE 9-22-90 — 85 — E — 1-45W727 — R20

PRINTS REQ'D R ____ PRINT SIZE F BR OR PROJ AB CE EE ME NE FE HE SE TE BL BF WB SQ — PRINT SIZE H BR OR PROJ AB CE EE ME NE FE HE SE TE BL BF WB SQ

CAD MAINTAINED DRAWING

CONFIGURATION CONTROL DRAWING