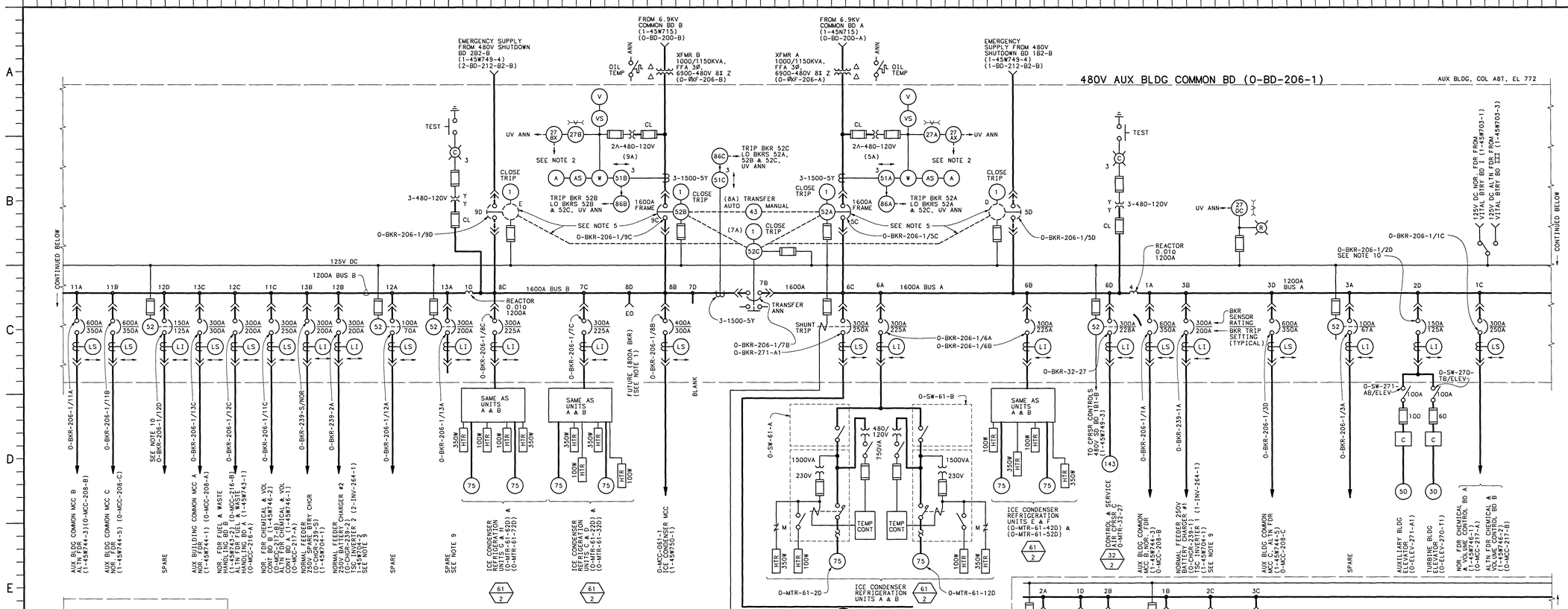

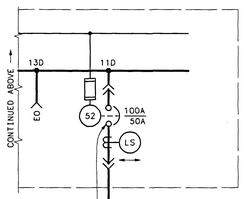

O-BD-206-1							
LOW VOLTAGE AIR CIRCUIT BKR TYPE	TRIP DEVICE SENSOR RATING (IN AMPS)	SETTINGS					BKR LOC.
		P.U. IN % OF SEN RATE			TIME DELAY		
		LONG DELAY	SHORT DELAY	INST.	LONG D. IN SEC.	SHORT D. IN SEC.	
DS-206	600	58	400	-	4	0.18	1A
DS-206	100	50	400	-	20	0.33	1B(SP)
DS-206	300	83	400	-	4	0.33	1C
DS-206	100	70	800	-	12	0.33	2A(SP)
DS-206	600	75	400	-	4	0.18	2B
DS-206	300	67	400	-	4	0.33	2C
DS-206	150	83	-	1000	8	-	2D
DS-206	100	67	-	600	20	-	3A(SP)
DS-206	300	67	-	600	4	-	3B
DS-206	300	100	400	-	4	0.33	3C
DS-206	600	58	400	-	4	0.18	3D
DS-416	NON-AUTO	-	-	-	-	-	5C
DS-206	300	75	-	800	8	-	6A
DS-206	300	75	-	800	8	-	6B
DS-206	300	83	400	-	8	0.33	6C
DS-206	300	76	-	600	4	-	6D
DS-416	NON-AUTO	-	-	-	-	-	7B
DS-206	300	75	-	800	8	-	7C
DS-206	400	75	400	-	8	0.33	8B
DS-206	300	75	-	800	8	-	8C
DS-416	NON-AUTO	-	-	-	-	-	9C
DS-206	600	58	400	-	4	0.18	11A
DS-206	600	58	400	-	4	0.18	11B
DS-206	300	83	400	-	4	0.33	11C
DS-206	100	50	400	-	20	0.33	11D(SP)
DS-206	100	70	800	-	12	0.33	12A(SP)
DS-206	300	67	-	600	4	-	12B
DS-206	300	67	400	-	4	0.33	12C
DS-206	150	83	-	1000	8	-	12D(SP)
DS-206	300	67	-	600	4	-	13A(SP)
DS-206	300	67	-	600	4	-	13B
DS-206	300	100	400	-	4	0.33	13C

NOTE:
ALL BOARD CUBICLES MARKED SPARE MAY OR MAY NOT CONTAIN A BREAKER AND SHALL BE VERIFIED BEFORE USE.

NOTES:

1. ALL FUTURE 800A BREAKERS MARKED EO ARE TO BE WIRED TO ACCOMMODATE AN ELECTRICALLY OPERATED BKR. ALL OTHERS ARE TO BE MANUALLY OPERATED.
2. THE INCOMING LINE SUPPLY BREAKERS, A, B & BUS TIE BKR C ARE INTERLOCKED IN SUCH A MANNER THAT THE COMMON BOARD TRANSFORMERS CANNOT BE PARALLELED. NORMALLY EACH BUS IS FED FROM ITS OWN TRANSFORMER WITH THE BUS TIE BREAKER OPEN. IN THE EVENT OF A POWER SUPPLY FAILURE, THE AFFECTED BUS WILL BE TRANSFERRED AUTOMATICALLY AFTER AN ADJUSTABLE TIME DELAY. UPON RESTORATION OF POWER, THE BUS WILL BE TRANSFERRED BACK TO ITS NORMAL SOURCE AUTOMATICALLY.
3. ALL 800A FRAME BREAKERS WITH INSTANTANEOUS OVERCURRENT TRIP DEVICES HAVE AN INTERRUPTING RATING OF 30,000 RMS SYMMETRICAL AMPERES, AND 800A FRAME BREAKERS WITH SELECTIVE OVERCURRENT TRIP DEVICES HAVE A MINIMUM INTERRUPTING RATING OF 22,000 RMS SYMMETRICAL AMPERES.
4. ALL 1600A FRAME BREAKERS HAVE AN INTERRUPTING RATING OF 50,000 RMS SYMMETRICAL AMPERES.
5. TO USE THE TWO EMERGENCY FEEDERS THE BREAKERS 52A AND 52B MUST BE MOVED TO THE EMERGENCY FEEDER COMPARTMENTS. THE EMERGENCY FEEDERS CANNOT BE PARALLELED WITH EACH OTHER OR A NORMAL POWER SUPPLY. THROUGH THE BUS TIE BREAKER.
6. ALL FUSES IN DC CIRCUIT ARE BUSSMAN KWN OR EQUAL.
7. NONE OF THIS EQUIPMENT IS SAFETY RELATED.
8. ALL CIRCUIT BREAKERS ARE 800A FRAME EXCEPT WHEN NOTED IN BD O-BD-206-1.
9. BREAKER O-BKR-206-1/13A IS AN INSTALLED SPARE FOR THE BREAKERS IN COMPARTMENTS 3B AND 12B, "NORMAL FEEDER 250V BATTERY CHARGER." THESE THREE BREAKERS WHETHER MECHANICAL OR ELECTRICAL ARE INTENDED TO OPERATE MECHANICALLY.

NOTES CONT AT LEFT:

NOTES CONT FROM RIGHT:

10. AN ELECTRICALLY OPERATED (EO) BREAKER INSTALLED IN A MECHANICALLY OPERATED (MO) BREAKER COMPARTMENT WILL FUNCTION AS MO BREAKERS. EO COMPARTMENTAL BREAKER 12D IS A DESIGNATED SUBSTITUTE FOR MO COMPARTMENTAL BREAKER 2D.
11. SPARE BREAKERS ARE NOT NECESSARILY MAINTAINED CALIBRATED. THEREFORE, BEFORE USE OF THE SPARE BREAKERS, SETTINGS SHALL BE VERIFIED ACCEPTABLE OR CALIBRATED IN ACCORDANCE WITH SITE PROCEDURES TO MATCH THE SETTINGS OF THE BREAKER BEING REPLACED.
12. FOR CONTROL POWER CONNECTIONS FROM UPS FOR MAIN AND AUX HOIST CONTROL SEE DRAWINGS EB-42607-3A2 AND EB-42607-4A2 (CONTRACT# 20060097).

REFERENCE DRAWINGS:
1-45W760-SYSTEM NO:- SHEET NO. --- SCHEMATIC
Ⓦ 6947D41 → 53 ---------- CONNECTION DIAGRAM
TVA CONTRACT NO. 74-84647
45W782 ---------- CONNECTION DIAGRAM

SYMBOLS:

LI — SOLID STATE OVERCURRENT TRIP DEVICE WITH LONG DELAY AND INSTANTANEOUS TRIP RANGES. BREAKER TRIP SETTING IS INDICATED.

LS — SOLID STATE OVERCURRENT TRIP DEVICE WITH LONG DELAY AND SHORT DELAY TRIP RANGES. BREAKER TRIP SETTING IS INDICATED.

61/1 — --EQUIPMENT SYSTEM NUMBER / --SHEET NO. OF SCHEMATIC IN SERIES 1-45W760.

FSAR FIG. 8.3-15

THIS CONFIGURATION CONTROL DRAWING SUPERSEDES UNIT 1 AS-CONSTRUCTED DRAWING 45W731 REVISION V.

REV	CHANGE REF	PREPARER	CHECKER	APPROVED	DATE
23	1-09-0002-271 R2	GJB	JEW	JKQ	10-17-09

RETURNED TO NORMAL TACF 1-09-0002-271 R2.

SCALE: NTS — EXCEPT AS NOTED

PROJECT FACILITY
AUXILIARY BUILDING
UNITS 1 & 2

TITLE
WIRING DIAGRAM 480V AUX BLDG COMMON BD SINGLE LINE

1 — WATTS BAR NUCLEAR PLANT, TENNESSEE VALLEY AUTHORITY — Q

DESIGN		INITIAL ISSUE	ENGINEERING APPROVAL
DRAFTER G.W. JOHNSON	CHECKER JDM/CNC	RO ISSUE PER WBEP 5.17 & RIMS B26 '91 0125 378	1 G.G. TRUETT
DESIGNER MLC/MEB	REVIEWER R.L. FORESTER		2 RON E. LESTER
			3 C.C. LYKE FOR MCB

ISSUED BY: R.M. JOHNSON FOR WLE

DATE 5-31-91 | 85 | E | 1-45W731 | R23

PRINTS REQ'D R ____ PRINT SIZE F BR OR PROJ AB CE EE ME NE FE HE SE TE BL BF WB SQ — PRINT SIZE H BR OR PROJ AB CE EE ME NE FE HE SE TE BL BF WB SQ

CAD MAINTAINED DRAWING

CONFIGURATION CONTROL DRAWING