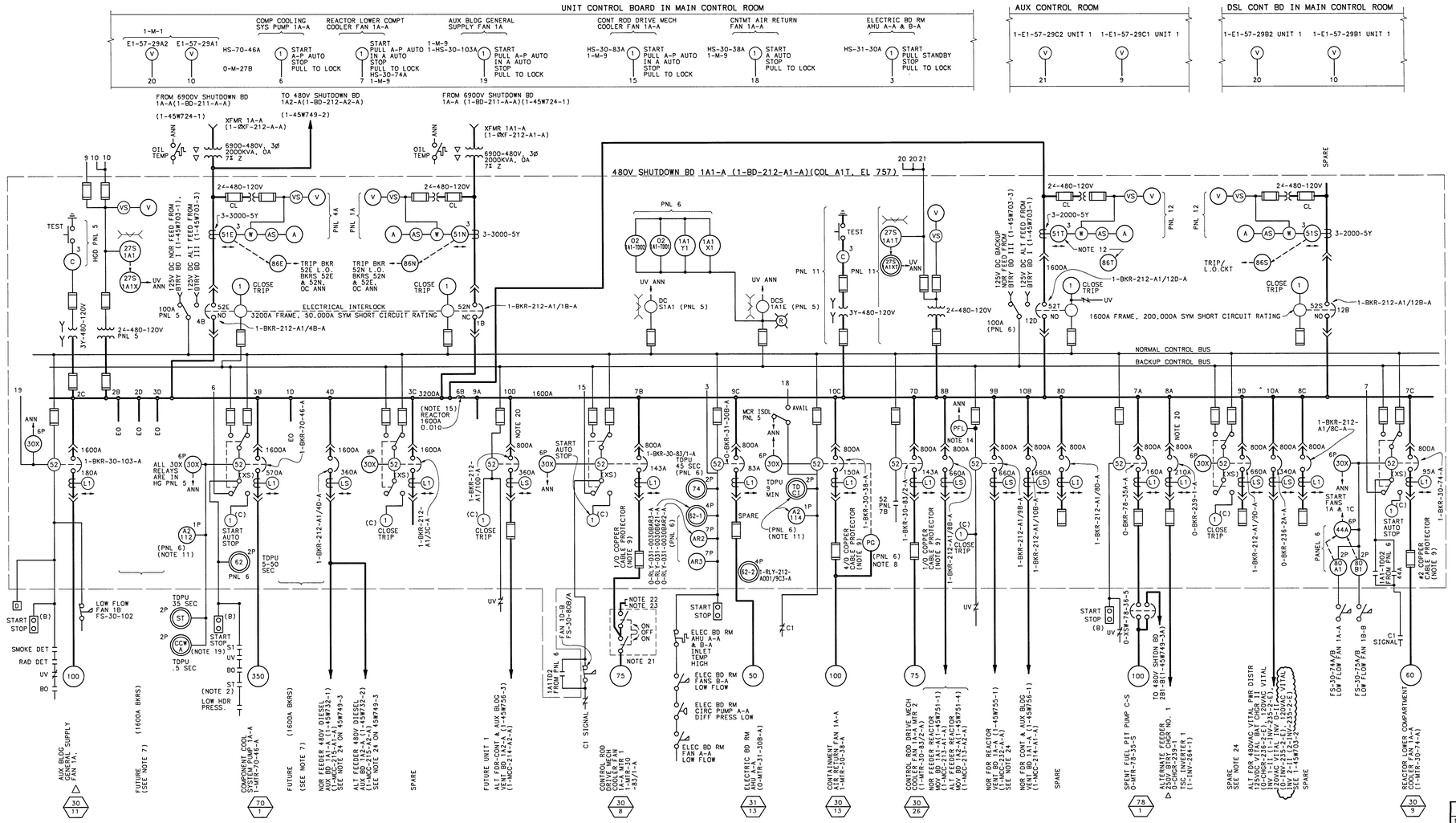

NOTES:

1. ALL 800A FRAME BREAKERS WITH INSTANTANEOUS OVERCURRENT TRIP DEVICES HAVE AN INTERRUPTING RATING OF 30,000 RMS SYM AMPERES, AND 800A FRAME BREAKERS WITH SELECTIVE OVERCURRENT TRIP DEVICES HAVE A MINIMUM INTERRUPTING RATING OF 22,000 RMS SYMMETRICAL AMPERES.
2. THESE CONTACTS ARE ON SEQUENTIAL TIMER (LOCATED ON SHUTDOWN BD LOGIC RELAY PANEL) THAT APPLIES LOAD SEQUENTIALLY TO THE DIESEL GENERATOR.
3. LOAD SHEDDING IS ACCOMPLISHED BY RELAYS LOCATED ON SHTDN BD LOGIC RELAY PANEL (SEE 1-45W724-1 & 1-45W760-211-SERIES).
4. ALL FUSES IN DC CIRCUITS ARE BUSSMAN.
5. EQUIPMENT DESIGNATORS FOR EQUIP SHARED BY BOTH UNITS WILL HAVE A PREFIX (O).
6. CLASS 1E LS AMPTECTORS ON DS-206 AND DS-416 BREAKERS THAT ARE REQUIRED TO COORDINATE WITH DOWNSTREAM CLASS 1E LOAD BREAKERS MUST HAVE THE DISCRIMINATOR CIRCUIT DISABLED (SEE TABLE).
7. ALL FUTURE BREAKERS MARKED EQ ARE WIRED TO ACCOMMODATE ELECTRICALLY OPERATED BREAKERS. ALL OTHERS ARE MANUALLY OPERATED.
8. "PC" IN COMPT 10C IS A DEVICE THAT TRIPS THE BKR WHEN ANY ONE OF THE CABLE PROTECTORS IS BLOWN, NOT SUPPLIED BY BD MFR, FIELD TO INSTALL.
9. PENETRATION PROTECTION FUSES (COMPTS 7B, 7C, 10C, 7D) ARE NOT SUPPLIED BY BD MFR, FIELD TO LOCATE AND INSTALL.
10. CONTROL SWITCH(C) REPRESENTS BACKUP CONTROL. (B) REPRESENTS LOCAL CONTROL. (XS) REPRESENTS NOR TO AUX TRANSFER SWITCH.
11. RELAYS A2-112 & A2-114 (COMPTS 3B & 10C) ARE NOT SUPPLIED BY THE BD MFR, FIELD TO INSTALL.
12. DEVICES 51T AND 86T ARE ABANDONED IN-PLACE. NO PERIODIC MAINTENANCE AND SURVEILLANCE TESTS ARE REQUIRED.
13. THE FUSE INFORMATION FOR CLASS 1E FUSES OR FUSES USED TO PROTECT ELECTRICAL PENETRATIONS SHOWN IN THIS DRAWING SERIES, OR AS GIVEN FOR THESE CIRCUITS IN VENDOR CONTRACT DRAWINGS REFERENCED IN THIS DRAWING SERIES, IS FOR INFORMATION ONLY. REFER TO THE MASTER FUSE REPORT, DRAWING SERIES 45B660DO, FOR CONFIGURATION CONTROLLED FUSE INFORMATION. OTHERWISE, FOR THOSE FUSES NOT LISTED IN THE MASTER FUSE REPORT, THESE DRAWINGS WILL REMAIN THE CONTROLLING DOCUMENT.
14. POWER FAILURE RELAY: 1-74-212-98A-A.
15. CURRENT LIMITING REACTORS FOR 480V SHUTDOWN BOARD (TVA CONTRACT 90NNO-75767A)
16. THE CURRENT LIMITING REACTOR BYPASS BREAKER SHALL BE MANUALLY TRIPPED PRIOR TO CLOSURE OF THE 6.9KV SHUTDOWN BOARD SUPPLY BREAKERS FROM CSST C, CSST D OR THE 6.9KV UNIT BOARDS.
17. ALL SWITCHGEAR CUBICLES MARKED SPARE MAY OR MAY NOT CONTAIN A BREAKER AND SHALL BE VERIFIED BEFORE USE.
18. FOR LOSS OF VOLTAGE OR A BOARD UNDERVOLTAGE CONDITION, THE TARGET ON UNDERVOLTAGE RELAY 27S1A1T WILL OPERATE BUT THE TARGET ON UNDERVOLTAGE RELAY 27S1A1 MAY OR MAY NOT OPERATE.
19. CABLE DISCONNECTED - NOT CURRENTLY USED.
20. DUE TO THE POTENTIAL FOR MULTIPLE HIGH IMPEDANCE FAULTS DURING AN APPENDIX R FIRE, THE BREAKER IDENTIFIED BY THIS NOTE SHALL BE OPEN. HOWEVER, IF FOR OPERATIONAL NEEDS, THE BREAKER MUST BE TEMPORARILY CLOSED, SEE THE FIRE PROTECTION REPORT, PART II, OPERATING REQUIREMENT (OR) SECTIONS 14.10.2 AND 814.10.2 FOR ACCEPTABLE OPERATING DURATION AND CONDITIONS. AS A SEPARATE ALTERNATE FEEDER ISSUE, SEE DRAWING 1-15E500-2 FOR ADDITIONAL RESTRICTIONS WHICH MAY RESULT IN A TECHNICAL SPECIFICATION ACTION.
21. DOUBLE THROW TRANSFER SWITCH.
22. RECEPTACLE FOR 480V POWER DURING OUTAGES. TO ENERGIZE THIS RECEPTACLE DURING OUTAGES. THE CRDM COOLER FAN CONTROL SWITCH 1-HS-30-83A MUST BE PLACED IN "STOP - PULL TO LOCK" AND CONTROL POWER FUSES 1-FU-212-A17/31 AND -A17/32 MUST BE REMOVED TO PREVENT FAN 2 FROM RUNNING. ALSO REMOVE FUSES 1-FU-273-R75/K19 AND -R75/K20 ON PANEL 1-R-75 TO PREVENT LOW FLOW NUISANCE ALARM OR DISABLE ALARM BY REMOVING ALARM INPUT FROM SCAN PER PA1-2.08. AFTER THE TRANSFER SWITCH IS PLACED IN "480V RECEPTACLE" PLACE 1-HS-30-83A IN "START".
23. ALL CIRCUITS FEEDING SUPPLIED BY THIS RECEPTACLE SHALL HAVE THEIR OWN PROPERLY SIZED ELECTRICAL CIRCUIT PROTECTION.
24. BREAKER 1-BKR-212-A1/9D-A IS AN INSTALLED SPARE BREAKER FOR BREAKER 9B, "NORMAL FEEDER TO 1-M-1 REACTOR VENT BOARD 1A-A". BREAKER SETTINGS FOR THE SPARE BREAKER ARE NOT REQUIRED TO BE MAINTAINED. THEREFORE, THE SETTINGS MUST BE VERIFIED PRIOR TO USE AS A FEEDER BREAKER. ONCE ADJUSTED TO THE SETTINGS SHOWN IN THE LOWER LEFT HAND TABLE, THE BREAKERS ARE INTERCHANGEABLE.

REFERENCE DRAWINGS:
1-45W760-SYS-NO----SHEET NO------480V SHTDN BD SCHEMATICS
45W748 SERIES-----480V SHUTDOWN BD CONNECTION DIAGRAMS
1-45W749-1A-----FOR UNIT 2 EQUIPMENT.

(W) 6947D06-D13
(W) 618F931, 932
9277057
9277058
} 480V SHTDN BD INTERNAL CONNECTIONS (TVA CONTRACT NO. 74-84647)

(W) 618F903-1
6941D41-1 - VENDOR ONE LINE DWG
6941D42-1 - FRONT VIEW DWG
6941D44-1 - SECTION DWG
- BILL OF MATERIALS
6503C91-1 THRU 97-1
6504C02-1, 6504C24-1 } BUS CONNECTION AND REACTOR MOUNTING DETAIL
} (TVA CONTRACT 90NNO-75767A)

SYMBOLS:

△---EQUIPMENT MARKED WITH THIS SYMBOL IS NOT SAFETY RELATED

(L1) SOLID STATE OVERCURRENT TRIP DEVICE WITH LONG DELAY AND INSTANTANEOUS TRIP RANGES. BREAKER TRIP SETTING IS INDICTED

(LS) SOLID STATE OVERCURRENT TRIP DEVICE WITH LONG DELAY AND SHORT DELAY TRIP RANGES. BREAKER TRIP SETTING IS INDICTED

(30/1) -----EQUIPMENT SYSTEM NUMBER
-----SCHEMATIC SHEET NUMBER IN SERIES 1-45W760

* BREAKER DISCRIMINATOR DEVICE HAS BEEN DISABLED.(NC0920004003)

(PFL) -------POWER FAILURE RELAY

THIS CONFIGURATION CONTROL DRAWING SUPERSEDES UNIT 1 AS-CONSTRUCTED DRAWING 45W749-1 REVISION JJ.

LOW VOLTAGE AIR CIRCUIT BKR TYPE	TRIP DEVICE SENSOR RATING (IN AMPS)	SETTINGS P.U. IN I OF SEN RATE LONG DELAY	SHORT DELAY	INST	TIME DELAY LONG D IN SEC.	SHORT D IN SEC.	BKR LOCATION
DS-632	NON-AUTO	-	-	-	-	-	1B, 4B
DS-416	200	90	-	700	4	-	2C
	600	95	-	800	4	-	3B
			-			-	3C(SP)
*	600	60	600	-	8	0.18	4D
DS-206	200	80	-	700	4	-	7A
	150	95	-	600	4	-	7B
	100	95	-	1200	9	-	7C
	150	95	-	600	4	-	7D
	300	70	-	600	20	-	8A
*	600	110	600	-	6	0.18	8B
			-			-	8C(SP)
				-			8D(SP)
*	600	110	600	-	6	0.18	9B
	150	55	-	600	4	-	9C
*	600	110	600	-	6	0.18	9D(SP) SEE NOTE 24
*	400	85	800	-	6	0.18	10A
*	600	110	600	-	6	0.18	10B
	200	75	-	1000	10	-	10C
*	600	60	600	-	8	0.18	10D
DSL-416	NON-AUTO	-	-	-	-	-	12B(SP)
DSL-416	NON-AUTO	-	-	-	-	-	12D

REV	CHANGE REF	PREPARER	CHECKER	APPROVED	DATE
58	52285	RWE	ESJ	JJG	10-3-09

REVISED PER DCA 52285-104-0.

SCALE: NTS — EXCEPT AS NOTED

PROJECT FACILITY
AUXILIARY BUILDING
UNIT 1

TITLE
WIRING DIAGRAMS 480V SHUTDOWN BD 1A1-A SINGLE LINE

1 — WATTS BAR NUCLEAR PLANT, TENNESSEE VALLEY AUTHORITY — Q

DESIGN		INITIAL ISSUE	ENGINEERING APPROVAL
DRAFTER D.L.WANG	CHECKER S.R.HANCOCK	RO ISSUE PER WBEP 5.17 & RIMS B26 '90 0828 376	1 C.H.SUDDUTH
DESIGNER M.L.CHAPMAN	REVIEWER D.F.FAULKNER		2 W.A.LAMBERT
			3 C.C.LYKE FOR MCB

FSAR FIG. 8.3-20

ISSUED BY: J.EDWARD GIBBS

DATE 9-22-90 | 85 | E | 1-45W749-1 | R58

PRINTS REQ'D R ____ PRINT SIZE F BR OR PROJ AB CE EE ME NE FE HE SE TE BL BF WB SQ — PRINT SIZE H BR OR PROJ AB CE EE ME NE FE HE SE TE BL BF WB SQ

CAD MAINTAINED DRAWING

CONFIGURATION CONTROL DRAWING